*This publication supersedes TM 9-2320-260-34-1, TM 9-2320-260-34-2-1, TM 9-2320-260-34-2-2, TM 9-2320-260-34-2-3, TM 9-2320-260-34-2-4, and TM 9-2320-260-34-2-5, 31 December 1980, for M809 series vehicles.

TECHNICAL MANUAL
VOLUME 2 OF 2
DIRECT SUPPORT AND GENERAL SUPPORT MAINTENANCE FOR
5-TON, 6X6, M809 SERIES TRUCKS (DIESEL)

TRUCK, CARGO: 5-TON, 6X6,
M813 (2320-00-050-8902) (EIC:BSB); (2320-00-050-8890) (EIC:BSA)
M813A1 (2320-00-050-8913) (EIC:BSD); (2320-00-050-8905) (EIC:BSC)
M814 (2320-00-050-8988) (EIC:BSK); (2320-00-050-8987) (EIC:BSJ)

TRUCK, BOLSTER, LOGGING: 5-TON, 6X6
M815 (2320-00-050-8927) (EIC:BSE)

TRUCK, WRECKER, MEDIUM: 5-TON, 6X6
M816 (2320-00-051-0489) (EIC:BSQ)

TRUCK, DUMP: 5-TON, 6X6
M817 (2320-00-050-8970) (EIC:BSF); (2320-00-051-0589) (EIC:BSR)

TRUCK, TRACTOR: 5-TON, 6X6
M818 (2320-00-050-8984) (EIC:BSH); (2320-00-050-8978) (EIC:BSG)

TRUCK, TRACTOR, WRECKER: 5-TON, 6X6
M819 (2320-00-050-9004) (EIC:BSL)

TRUCK, VAN EXPANSIBLE: 5-TON, 6X6
M820 (2326-00-050-9006) (EIC:BSM)
M820A1 (2320-00-050-9007)
M820A2 (2320-00-050-9010) (EIC:BSN)

TRUCK, STAKE, BRIDGE TRANSPORTING: 5-TON, 6X6
M821 (2320-00-050-9015) (EIC:BSP)

STEERING SYSTEM MAINTENANCE 12-1
FRAME MAINTENANCE 13-1
BODY, CAB, AND HOOD MAINTENANCE 14-1
SPECIAL PURPOSE BODIES MAINTENANCE 15-1
WINCH AND POWER TAKEOFF MAINTENANCE 16-1
SPECIAL PURPOSE KITS MAINTENANCE 17-1

DISTRIBUTION STATEMENT A. Approved for public release; distribution is unlimited.

DEPARTMENTS OF THE ARMY AND THE AIR FORCE
JUNE 1994

WARNING

EXHAUST GASES CAN KILL

1. DO NOT operate your vehicle engine in enclosed area.
2. DO NOT idle vehicle engine with cab windows closed.
3. DO NOT drive vehicle with inspection plates or cover plates removed.
4. BE ALERT at all times for exhaust odors.
5. BE ALERT for exhaust poisoning symptoms. They are:
   - Headache
   - Dizziness
   - Sleepiness
   - Loss of muscular control
6. If YOU SEE another person with exhaust poisoning symptoms:
   - Remove person from area
   - Expose to open air
   - Keep person warm
   - Do not permit person to move
   - Administer artificial respiration, if necessary*

   * For artificial respiration, refer to FM 21-11.

WARNING SUMMARY

- All personnel must stand clear during lifting operations. A swinging or shifting load may cause injury or death to personnel.
- Eye protection must be worn when removing and installing springs under tension. Failure to do so may result in injury to personnel.
- Plunger rack is under spring tension. Keep hands clear of plunger rack during removal. Failure to do so may cause injury to personnel.
- Drycleaning solvent is flammable and will not be used near open flame. Use only in well-ventilated places. Failure to do so may result in injury to personnel.
- Ensure lifting capacity is greater than weight of fifth wheel. Failure to do so may result in injury to personnel or damage to equipment.
- Plunger is under spring tension. Keep hands clear of plunger during removal. Failure to do so may cause injury to personnel.
- Eye protection is required when using wire brush for cleaning. Failure to do so may result in injury to personnel.
- Stabilize winch while sitting vertical. Failure to do so may result in injury to personnel.

WARNING SUMMARY (Contd)

- Never work under raised dump body until safety braces are properly positioned. Injury to personnel may result if dump body suddenly lowers.
- Do not operate dump controls when dump body is removed. Injury to personnel may result if lift cylinder is operated when not secured.
- Bypass plugs are under tension. Remove plugs slowly. Failure to do so may result in injury to personnel.
- Spring is under tension. Release tension slowly. Failure to do so may result in injury to personnel.
- Ensure lifting capacity is greater than weight (465 lb (211 kg)) of cab protector shield. Failure to do so may result in injury to personnel or damage to equipment.
- Ensure lifting capacity is greater than weight (500 lb (227 kg)) of hoist cylinder. Failure to do so may result in injury to personnel or damage to equipment.
- Ensure lifting capacity is greater than weight (9,055 lb (4,111 kg)) of van body. Failure to do so may result in injury to personnel or damage to equipment.
- Support capacity must be greater than weight of van body, Ensure support capacity is not less than 9,055 lb (4,111 kg). Failure to ensure this may result in injury to personnel or damage to equipment.
- Van body is insulated with fibrous glass felt insulation. Gloves, eyeshields, and dust mask must be worn during van body maintenance. Failure to do so may result in injury to personnel.
- Compressed air source will not exceed 30 psi (207 kPa). When cleaning with compressed air, eyeshields must be worn. Failure to wear eyeshields may result in injury to personnel.
- Do not perform engine coolant heater testing while smoking or within 50 feet of sparks or open flame. Fuel is flammable and can explode easily, causing injury or death to personnel and damage to equipment.
- Do not handle hot heater with bare hands; wear hand protection at all times. Failure to do so may cause injury to personnel.
- Exhaust gases can kill. Do not perform this task in enclosed areas. Ensure work area is well-ventilated and exhaust fumes are directed away from test area.
- Allow time for heater to cool before removing from test equipment. Failure to do so may result in injury to personnel or damage to equipment.
- Ensure lifting capacity is greater than weight (1,800 lb (817 kg)) of cargo body. Failure to do so may result in injury to personnel or damage to equipment.
- Ensure lifting capacity is greater than weight (2,700 lb (1,226 kg)) of dump body. Failure to do so may result in injury to personnel or damage to equipment.
- Ensure lifting capacity is greater than weight (1,800 lb (817 kg)) of wrecker body. Failure to do so may result in injury to personnel or damage to equipment.
- Ensure lifting capacity is greater than weight (1,800 lb (817 kg)) of tractor wrecker body. Failure to do so may result in injury to personnel or damage to equipment.
- Ensure lifting capacity is greater than weight (2,700 lb (1,226 kg)) of subframe. Failure to do so may result in injury to personnel or damage to equipment.
- All personnel must be clear of vehicle when vehicle engine is running. Vehicle could suddenly move and cause injury to personnel.
- Platform is heavy and bulky; handle with care. Failure to do so may result in injury to personnel or damage to equipment,
- Do not disconnect air lines before draining air reservoirs. Small parts under pressure may shoot out with high velocity, causing injury to personnel.

* ARMY TM 9-2320 -260-34-2
AIR FORCE TO 36A12-1C-1122-2

TECHNICAL MANUAL
NO. 9-2320-260-34-2

TECHNICAL ORDER
NO. 36A12-1C-1122-2

DEPARTMENTS OF THE ARMY
AND THE AIR FORCE

WASHINGTON, D.C. *1 June 1994*

TECHNICAL MANUAL
VOLUME 2 OF 2
DIRECT SUPPORT AND GENERAL SUPPORT MAINTENANCE
5-TON, 6X6, M809 SERIES TRUCKS
(DIESEL)

Model		NSN Without Winch	(EIC)	NSN With Winch	(EIC)
Truck, Cargo	M813	2320-00-050-8902	(BSB)	2320-00-050-8890	(BSA)
	M813A1	2320-00-050-8913	(BSD)	2320-00-050-8905	(BSC)
	M814	2320-00-050-8988	(BSK)	2320-00-050-8987	(BSJ)
Truck, Bolster, Logging	M815			2320-00-050-8927	(BSE)
Truck, Wrecker, Medium	M816			2320-00-051-0489	(BSQ)
Truck, Dump	M817	2320-00-050-8970	(BSF)	2320-00-051-0589	(BSR)
Truck, Tractor	M818	2320-00-050-8984	(BSH)	2320-00-050-8978	(BSG)
Truck, Tractor, Wrecker	M819			2320-00-050-9004	(BSL)
Truck, Van, Expansible	M820	2320-00-050-9006	(BSM)		
	M820A1	2320-00-050-9007			
	M820A2	2320-00-050-9010	(BSN)		
Truck, Stake, Bridge Transporting	M821			2320-00-050-9015	(BSP)

This manual is published in two parts. TM 9-2320-260-34-1 contains chapters 1 through 11, and TM 9-2320-260-34-2 contains chapters 12 through 17 and appendices A, B, C, D, E, and F.

This manual contains a table of contents and an alphabetized index for chapters 1 through 17.

* This publication supersedes TM 9-2320-260-34-1. TM 9-2320-260-34-2-1. TM 9-2320-260-34-2-2. TM 9-2320-260-34-2-3, TM 9-2320-260-34-2-4, and TM 9-2320-260-34-2-5, dated 31 December 1980, for M809 series vehicles.

DISTRIBUTION STATEMENT A. Approved for public release; distribution is unlimited.

REPORTING OF ERRORS

You can help improve this manual. If you find any mistakes or if you know of a way to improve the procedures, please let us know. Mail your letter, DA Form 2028 (Recommended Changes to Publications and Blank Forms), or DA Form 2028-2, located in back of this manual, direct to: Commander, U.S. Army Tank-Automotive Command, ATTN: AMSTA-MB, Warren, Michigan 48397-5000. A reply will be furnished to you.

VOLUME 2 OF 2

CHAPTER 12 STEERING SYSTEM MAINTENANCE 12-1

Section I. Mechanical and Power Steering System Maintenance 12-1

II. Tire Maintenance 12-18

CHAPTER 13 FRAME MAINTENANCE 13-1

CHAPTER 14 BODY, CAB, AND HOOD MAINTENANCE 14-1

CHAPTER 15 SPECIAL PURPOSE BODIES MAINTENANCE l 15-1

Section I. Cargo Body Maintenance 15-1

II. Wrecker Body Maintenance 15-8

III. Tractor Wrecker Body Maintenance 15-13

IV. Dump Body Maintenance 15-24

V. Van Body Maintenance 15-70

VI. Van Body Electrical Components Replacement 15-239

CHAPTER 16 WINCH AND POWER TAKEOFF MAINTENANCE 16-1

Section I. Front Winch Maintenance 16-1

II. Rear Winch Maintenance 16-44

III. Crane and Hoist Maintenance 16-76

IV. Transmission Power Takeoff Maintenance 16-230

V. Transer Power Takeoff Maintenance 16-250

VI. Power Divider and Drive Assembly Maintenance 16-270

CHAPTER 17 SPECIAL PURPOSE KITS MAINTENANCE 17-1

Section I. Description and Data 17-1

Section II. Engine Coolant Heater Maintenance 17-3

III. Personnel Heater Maintenance. 17-36

APPENDIX PREFERENCES A-1

APPENDIX B COMMON AND SPECLIAL TOOLS LIST B-1

APPENDIX C EXPENDABLE/DURABLE SUPPLIES AND MATERIALS LIST C-1

APPENDIX D MANDATORY REPL.ACEMENT PARTS. D-1

Section I. Introduction D-1

II. Mandatory Replacement Parts D-2

APPENDIX E ILLUSTRATED LIST OF MANUFACTURED ITEMS E-1

APPENDIX F TORQUE LIMITS F-1

INDEX . . . . Index 1

CHAPTER 12

STEERING SYSTEM MAINTENANCE

Section I. Mechanical and Power Steering System Maintenance (page 12-1)
Section II. Tire Maintenance (page 12-18)

Section I. MECHANICAL AND POWER STEERING SYSTEM MAINTENANCE

12-1. MECHANICAL AND POWER STEERING SYSTEM MAINTENANCE INDEX

PARA. NO.	TITLE	PAGE NO.
12-2.	Description	12-1
12-3.	Preliminary Maintenance Checklist	12-2
12-4.	Maintenance Precautions	12-2
12-5.	Power Steering Gear Replacement	12-3
12-6.	Power Steering Test and Adjustment	12-6
12-7.	Power Steering Assist Cylinder Maintenance	12-16

12-2. DESCRIPTION

This paragraph describes the power steering gear and power steering pump with oil reservoir.

a. The M809 series vehicles utilize a power steering system consisting of a power steering gear which is a fully integral power unit incorporating a hydraulic control valve, hydraulic power cylinders, and a mechanical steering mechanism. Now of oil from the engine-driven pump is directed to the power assist cylinder by the control valve.

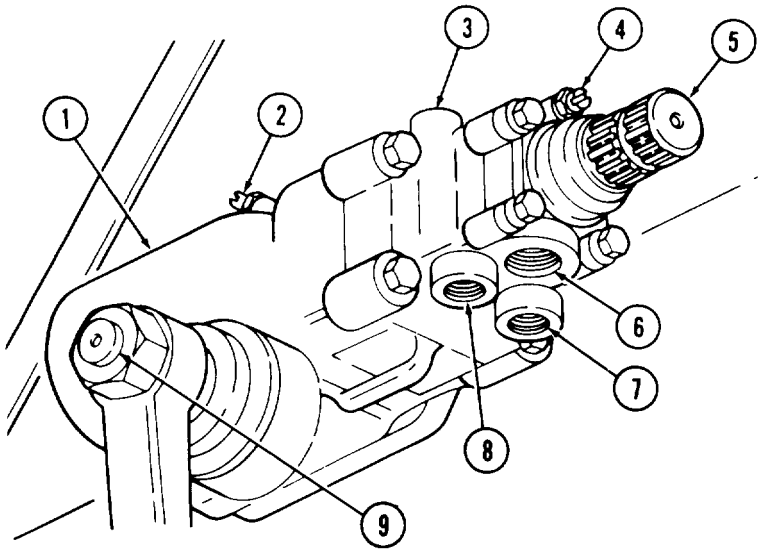

1. Power steering gear assembly
2. Poppet valve adjustment
3. Hydraulic pressure inlet
4. Poppet valve adjustment screw
5. Input shaft
6. Hydraulic oil return
7. Assist cylinder port
8. Assist cylinder port
9. Sector shaft

12-2. DESCRIPTION (Contd)

b. The power steering pump and reservoir are incorporated into a single assembly. The oil reservoir encloses the pump housing and provides a reserve supply of oil to assure complete filling of hydraulic system. Atmospheric pressure in the reservoir is maintained through a breather near filler neck of reservoir. A filter is installed near intake of pump to prevent dirt and other foreign matter from entering hydraulic system. Two V-belts transfer power from the engine accessory drive to a double pulley which drives the power steering pump.

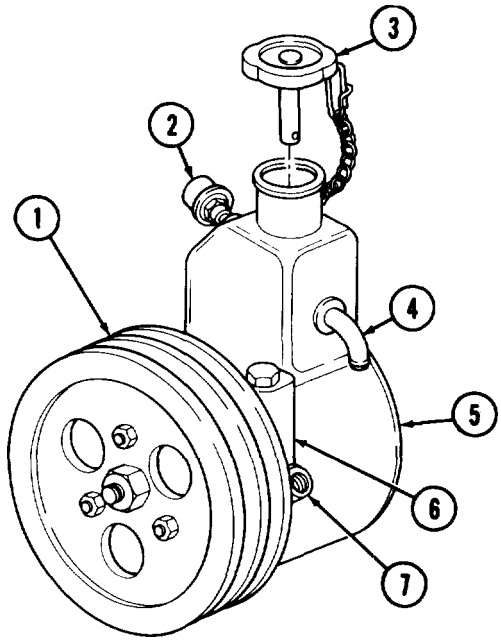

1. Power steering pump pulley
2. Breather
3. Reservoir cap
4. Reservoir return line tube
5. Power steering pump reservoir
6. Power steering pump
7. Reservoir inlet port

12-3. PRELIMINARY MAINTENANCE CHECKLIST

1. Check steering linkage and components for wear before performing hydraulic tests and adjustments.
2. Check tire pressures. Ensure pressures are correct and equal (TM 9-2320-260-10).
3. Check slip joint on steering column. Ensure it is free and lubricated. A tight slip joint can cause steering problems.
4. Check oil reservoir for proper oil level. (LO 9-2320-260-12).
5. Check oil pump drivebelts for tightness, wear, and slippage (TM 9-2320-260-20).
6. If problems cannot be determined during the preliminary check, you will have to test the hydraulic system.

12-4. MAINTENANCE PRECAUTIONS

1. Always use a puller to remove steering arms. Never use a torch or hammer.
2. Do not weld any broken steering components. Replace defective or broken parts.
3. Do not cold straighten, hot straighten, or bend any steering system part.
4. Excessive heat will develop if power steering is held in extreme right or left turns longer than a few seconds. This heat will damage seals and/or pump.
5. Prevent dirt and foreign matter from entering hydraulic steering system. Always clean around filler caps, hose, and fitting connections before removing.

12-5. POWER STEERING GEAR REPLACEMENT

THIS TASK COVERS:

a. Removal **b. Installation**

INITIAL SETUP

APPLICABLE MODELS

All

TOOLS

General mechanic's tool kit (Appendix B, Item 1)
Socket set, 3/4-in. dr. (Appendix B, Item 24)
Torque wrench, 3/8-in. dr. (Appendix B, Item 4)
Torque wrench, 3/4-in. dr. (Appendix B, Item 2)

MATERIALS/PARTS

Lockwasher (Appendix D, Item 248)
Safety wire (Appendix D, Item 373)
Cap and plug set (Appendix C, Item 6)
Antiseize tape (Appendix C, Item 50)

REFERENCES (TM)

LO- 9-2320-260-12
TM 9-2320-260-10
TM 9-2320-260-20
TM 9-2320-260-34P-1

EQUIPMENT CONDITION

- Left front wheel assembly removed (TM 9-2320-260-10).
- Power steering pump reservoir drained (TM 9-2320-260-10).
- Radiator removed (TM 9-2320-260-20).
- Steering gear shield removed (TM 9-2320-260-20).
- Pitman arm removed (TM 9-2320-260-20).

a. Removal

1. Turn five fasteners (1) counterclockwise and remove access panel (2) from fender (3).

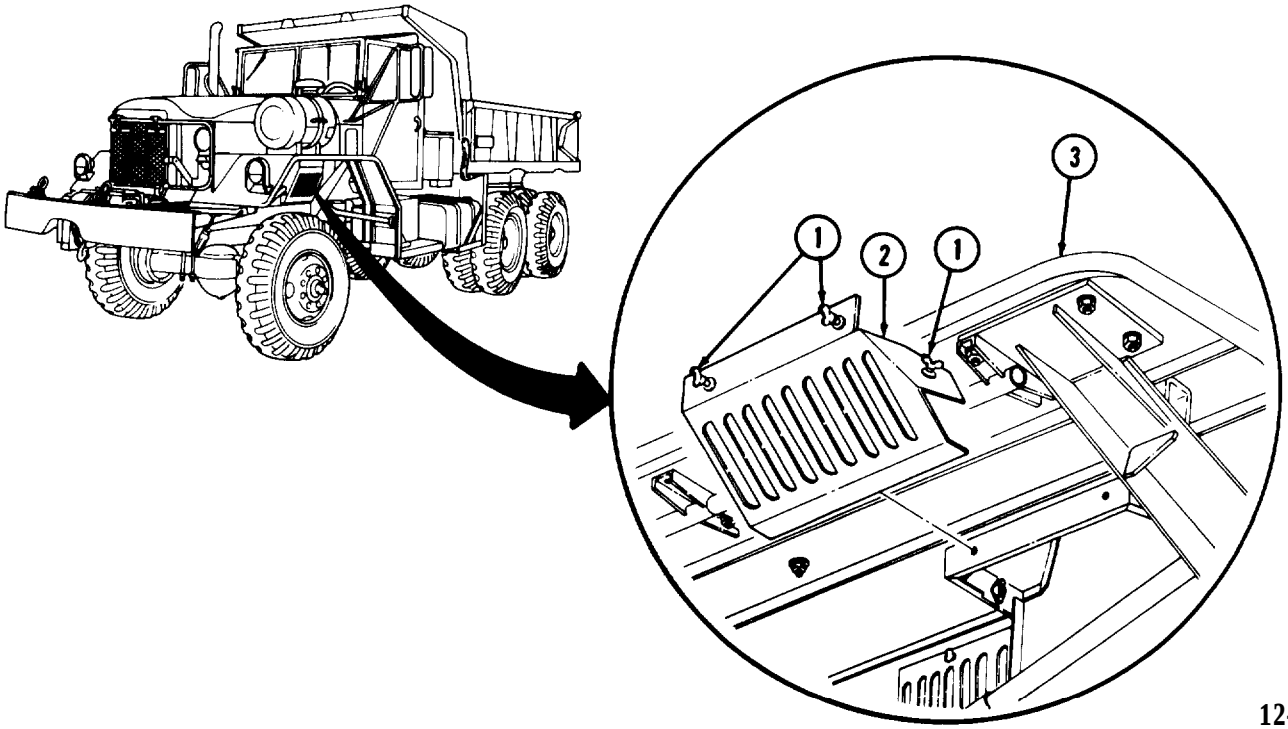

12-5. POWER STEERING GEAR REPLACEMENT (Contd)

2. Remove nut (12), lockwasher (11), and screw (7) from universal joint (6). Discard lockwasher (11).
3. Remove universal joint (6) from shaft (2) by pushing lower section (10) into upper section (9) of lower steering column (8).
4. Remove safety wire (5) from four screws (4). Discard safety wire (5).

CAUTION

- Clean area around hoses and lines before removal to prevent entry of dirt. Damage will occur if dirt or dust enters power steering system.
- Cap or plug all openings immediately after disconnecting lines and hoses to prevent contamination. Remove caps or plugs prior to connection. Failure to do so may result in damage to equipment.

NOTE

- Tag hydraulic lines and ports for installation.
- Have drainage container ready to catch hydraulic fluid.
- Assistant will help with step 5.

5. Remove four screws (4), washers (3), power steering gear (1), and mounting plate (15) from frame (13) and bracket (14).
6. Remove pressure hose (17) and elbow (16) from power steering gear (1).
7. Remove return tube (19) and adapter (18) from power steering gear (1).
8. Disconnect power steering pressure lines (20) and (22) from adapters (21) and (23).
9. Remove adapters (21) and (23) from power steering gear (1).

b. Installation

NOTE

Assistant will help with step 2.

1. Wrap adapters (18), (21), and (23), and elbow (16) with anti seize tape before installation.
2. Install mounting plate (15) and power steering gear (1) on bracket (14) and frame (13) with four washers (3) and screws (4). Tighten screws (4) 260-280 lb-ft (353-380 N-m).
3. Install new safety wire (5) through four screws (4) on bracket (14) and frame (13).
4. Install adapters (18), (21), and (23), and elbow (16) on power steering gear (1).
5. Install power steering lines (20) and (22) on power steering gear (1).
6. Install return tube (19) on power steering gear (1).
7. Install pressure hose (17) on power steering gear (1).
8. Install lower steering column universal joint (6) on power steering gear shaft (2) with screw (7), new lockwasher (11), and nut (12). Tighten nut (12) 28-34 lb-ft (38-46 N-m).
9. Install access panel (25) on fender (26) with five fasteners (24).

12-5. POWER STEERING GEAR REPLACEMENT (Contd)

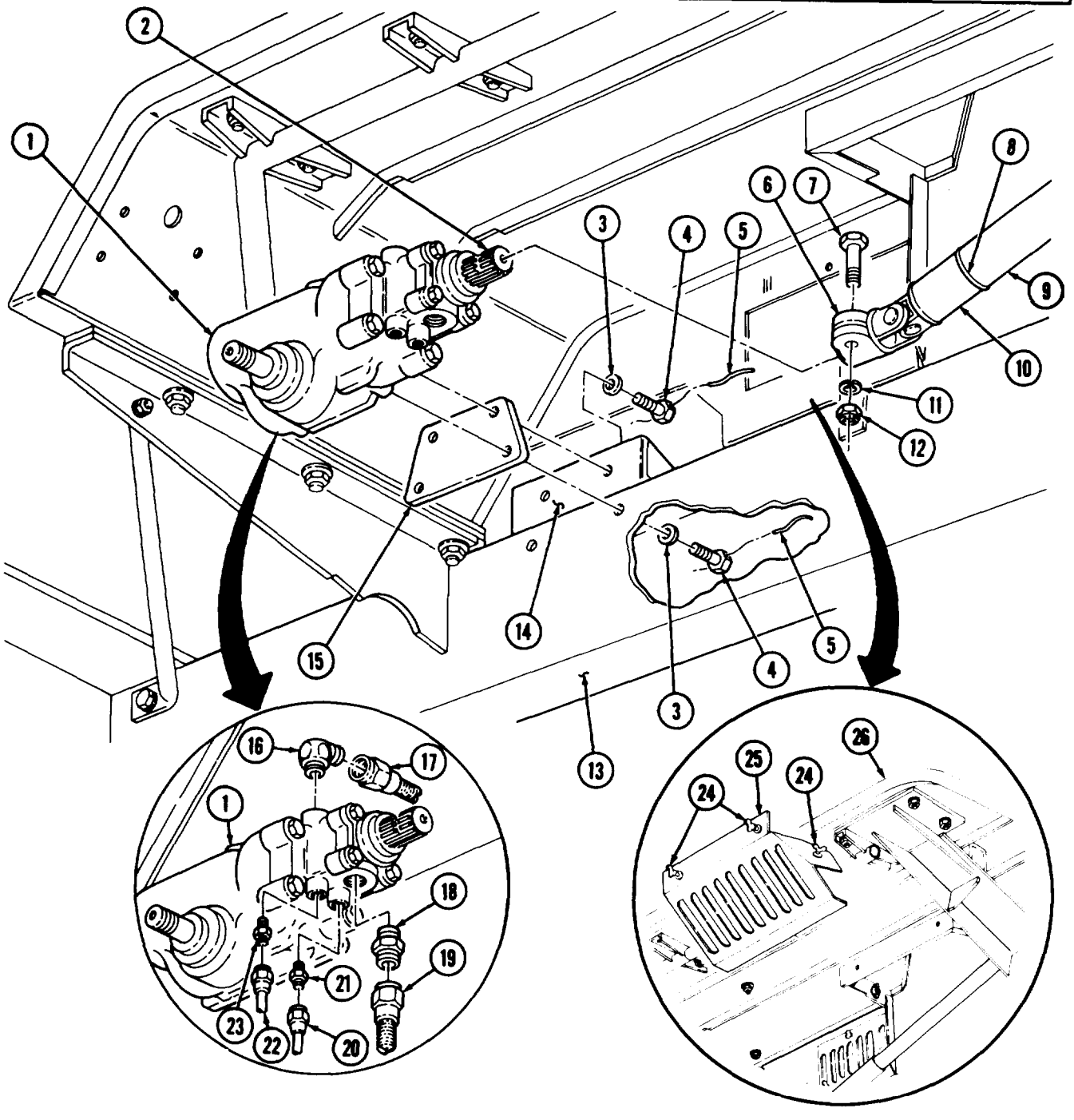

FOLLOW-ON TASKS:
- Install pitman arm (TM 9-2320-260-20).
- Install steering gear shield (TM 9-2320-260-20).
- Install left front wheel assembly (TM 9-2320-260-10).
- Install radiator (TM 9-2320-260-20).
- Fill power steering reservoir to proper level (LO 9-2320-260-12) and check for leaks.
- Bleed hydraulic power steering system (TM 9-2320-260-20).
- Check power steering left and right travel.
- Road test vehicle for proper power steering system operation (TM 9-2320-260-10).

12-6. POWER STEERING TEST AND ADJUSTMENT

THIS TASK COVERS:

a. Steering Pump Test Equipment Installation
b. Steering Pump Pressure Test
c. Steering Pump Flow Test
d. Steering Gear Internal Leakage Test
e. Poppet Adjustment
f. Sector Shaft Adjustment
g. Steering Pump Test Equipment Removal

INITIAL SETUP

APPLICABLE MODELS
All

TOOLS
General mechanic's tool kit (Appendix B, Item 1)
Torque wrench, 3/8-in. dr. (Appendix B, Item 4)

TEST EQUIPMENT
Power steering test set (Appendix B, Item 145)
Flowmeter (Appendix B, Item 146)
Thermometer (Appendix B, Item 147)

MATERIALS/PARTS
Cap and plug set (Appendix C, Item 6)

REFERENCES (TM)
LO 9-2320-260-12
TM 9-2320-260-10
TM 9-2320-260-20
TM 9-2320-260-34P-1

EQUIPMENT CONDITION
Steering gear shield removed (TM 9-2320-260-20).

GENERAL SAFETY INSTRUCTIONS
All personnel must be clear of vehicle when vehicle engine is running.

WARNING

All personnel must be clear of vehicle when vehicle engine is running. Vehicle could suddenly move and cause injury to personnel.

NOTE

Do not begin this procedure before performing all preliminary maintenance checks (para. 12-3).

a. Steering Pump Test Equipment Installation

CAUTION

- Clean area around hoses and lines before removal to prevent entry of dirt. Damage will occur if dirt or dust enters the steering system.
- Cap or plug all openings immediately after disconnecting lines and hoses to prevent contamination. Remove caps or plugs prior to connection. Failure to do so may result in damage to equipment.

NOTE

Have drainage container ready to catch power steering fluid.

1. Remove pressure hose (5) from elbow (8).
2. Install load shutoff valve (7) on elbow (8).
3. Install tee (6) on load shutoff valve (7).
4. Install pressure hose (5) and gage on tee (6).

12-6. POWER STEERING TEST AND ADJUSTMENT (Contd)

5. Loosen clamp (10) and remove return hose (9) from return tube (2).
6. Install flowmeter on return tube (2) and tighten clamp (1).
7. Install return hose (9) on flowmeter and tighten clamp (10).
8. Remove filler cap (4) and place thermometer in filler neck (3).

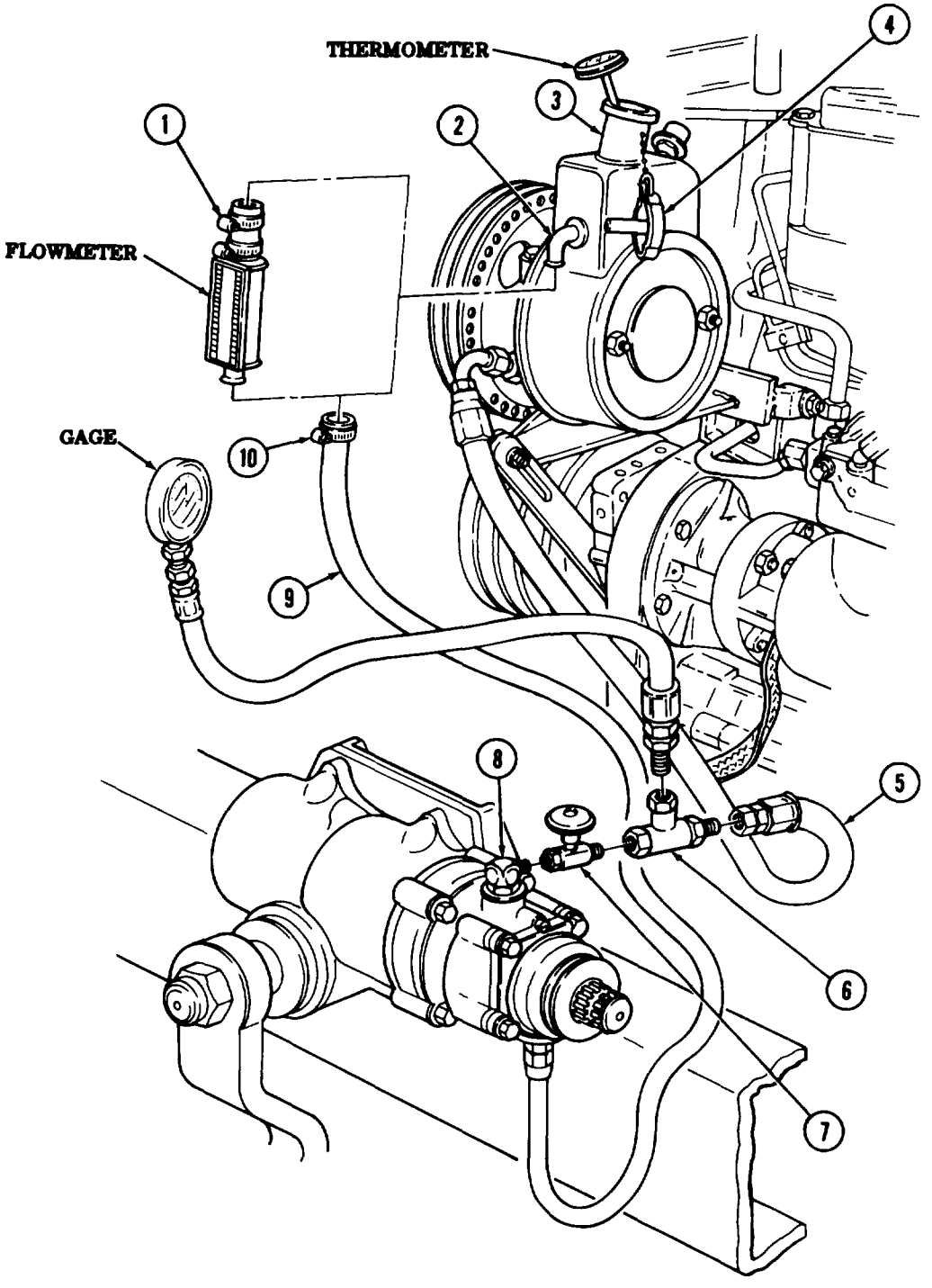

12-6. POWER STEERING TEST AND ADJUSTMENT (Contd)

b. Steering Pump Pressure Test

1. Start engine (TM 9-2320-260-10) and warm engine to operating temperature. Let engine run at idle until end of test.

CAUTION

Power steering oil temperature cannot exceed 200°F (93°C).
Damage to equipment may result.

2. Partially close load shutoff valve (2) until gage reads 1000 psi (6895 kPa).
3. Observe temperature reading on thermometer. Temperature must be 165°- 175°F (74°-79°C). If temperature reading is not between 165°- 175°F (74°-79°C), refer to Chapter 2, Mechanical Troubleshooting, Steering Gear.
4. Fully open load shutoff valve (2).

CAUTION

Do not keep load shutoff valve closed for more than 5 seconds.
Failure to do so may result in damage to power steering pump.

5. Close load shutoff valve (2) and observe gage. Replace pump (1) if gage reads below 1250 psi (8619 kPa) (TM 9-2320-260-20).
6. Open load shutoff valve (2).
7. Shut down engine (TM 9-2320-260-10).

c. Steering Pump Flow Test

1. Start engine (TM 9-2320-260-10) and warm engine to operating temperature. Engine at idle.

CAUTION

Power steering gear oil temperature cannot exceed 200°F (93°C).
Damage to equipment may result.

2. With engine idling, observe temperature reading on thermometer. Temperature must be 165°-175°F (74°-79°C). If temperature reading is not between 165°- 175°F (74°-79°C), refer to Chapter 2, Mechanical Troubleshooting, Steering Gear.
3. Observe flow rate on flowmeter. Replace pump (1) if flowmeter reads below 4.3 gpm (16.3 lpm) (TM 9-2320-260-20).

CAUTION

Do not keep load shutoff valve closed for more than 5 seconds.
Failure to do so may result in damage to power steering pump.

4. Close load shutoff valve (2) and observe reading on gage and flowmeter. Gage should read 1250 psi (8619 kPa). Flowmeter should read zero. Replace pump (1) if gage reads below 1250 psi (8619 kPa) (TM 9-2320-260-20).
5. Open load shutoff valve (2) and observe flowmeter. Replace pump (1) if flow rate is below 4.3 gpm (16.3 lpm) (TM 9-2320-260-20).
6. Run engine at 3000 rpm.
7. Close load shutoff valve (2) and observe gage and flowmeter. Gage should read 1525 psi (10514 kPa). Flowmeter should read zero. Replace pump (1) if gage reads above 1525 psi (10514 kPa) (TM 9-2320-260-20).
8. Open load shutoff valve (2) and observe flowmeter. Replace pump (1) if flow rate is below 8 gpm (30.3 lpm) (TM 9-2320-260-20).
9. Shut down engine (TM 9-2320-260-10).

12-6. POWER STEERING TEST AND ADJUSTMENT (Contd)

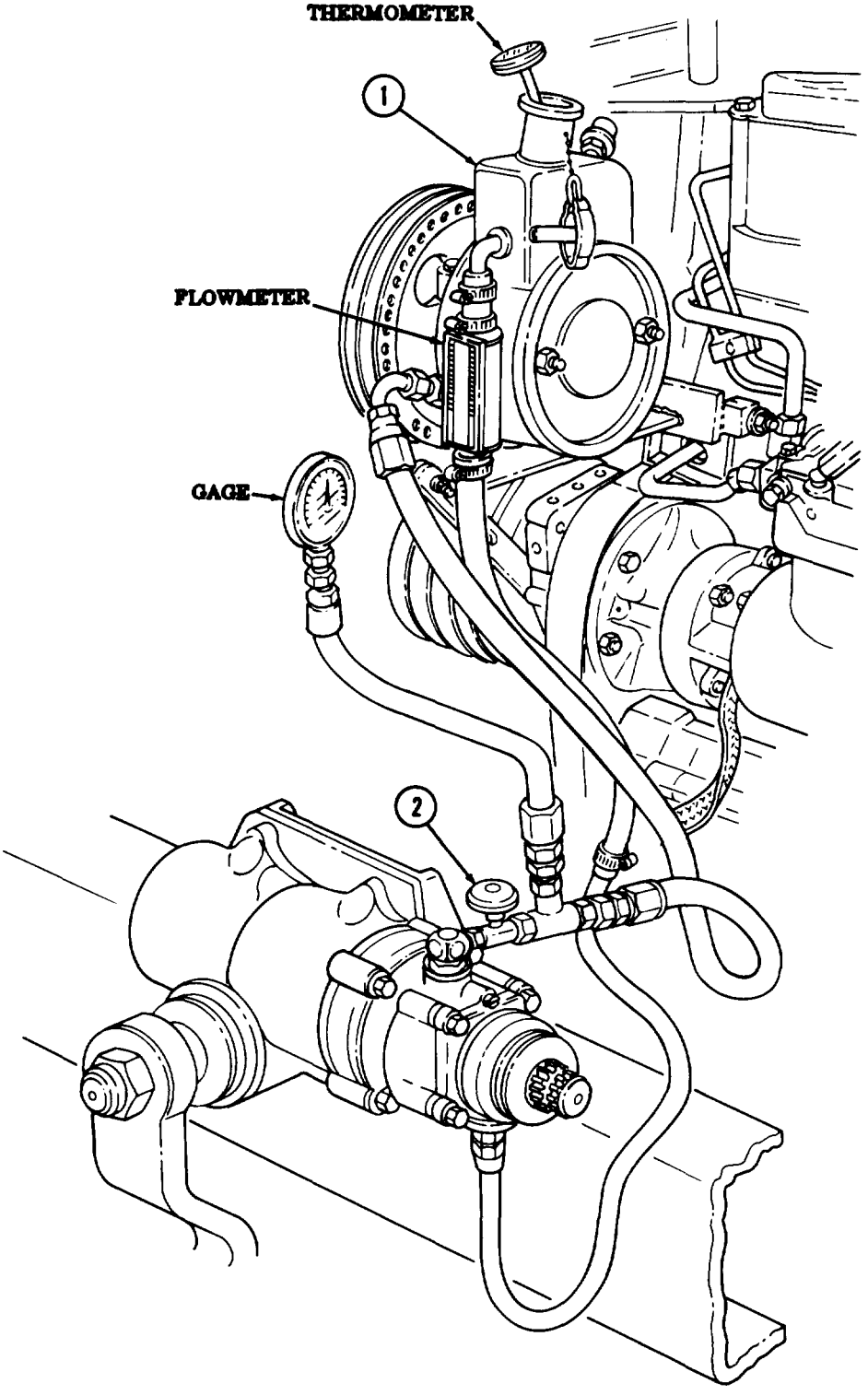

12-6. POWER STEERING TEST AND ADJUSTMENT (Contd)

d. Steering Gear Internal Leakage Test

1. Start engine (TM 9-2320-260-10) and warm to operating temperature. Let engine idle to end of test.

CAUTION

Power steering oil temperature cannot exceed 200°F (93°C). Damage to equipment may result.

2. With engine idling, observe temperature reading on thermometer. Temperature must be 165°-175°F (74°-79°C). If temperature is not between 165°-175°F (74-79°C), refer to Chapter 2, Mechanical Troubleshooting, Steering Gear.

CAUTION

Do not hold steering wheel in full turn position for more than 10 seconds. Pump damage may result.

NOTE

Assistant will help with step 3.

3. With steering wheel (1) at center position, turn steering wheel (1) a half turn to right. Hold steering wheel (1) for 3-10 seconds.
4. Observe gage and flowmeter. Gage should read 1350-1500 psi (9308-10342 kPa), if not, refer to chapter 2, Mechanical Troubleshooting, Steering Gear. Replace steering gear (2) if flowmeter reads greater than 0.75 gpm (2.84 lpm) (para. 12-5).

NOTE

Assistant will help with step 5.

5. With steering wheel (1) at center position, turn wheel (1) one half turn to left. Hold steering wheel (1) for 3-10 seconds.
6. Observe gage and flowmeter. Gage should read 1350-1500 psi (9308-10342 kPa), if not, refer to Chapter 2, Mechanical Troubleshooting, Steering Gear. Replace steering gear (2) if flowmeter reads greater than 0.75 gpm (2.84 lpm) (para. 12-5).
7. Shut down engine (TM 9-2320-260-10).

12-6. POWER STEERING TEST AND ADJUSTMENT (Contd)

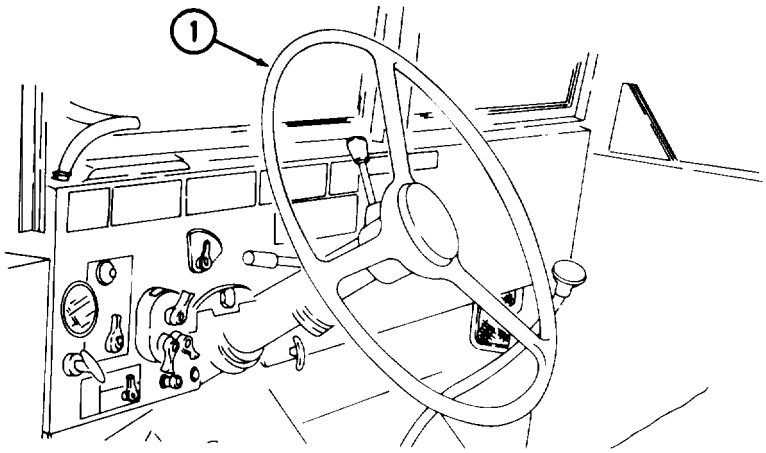

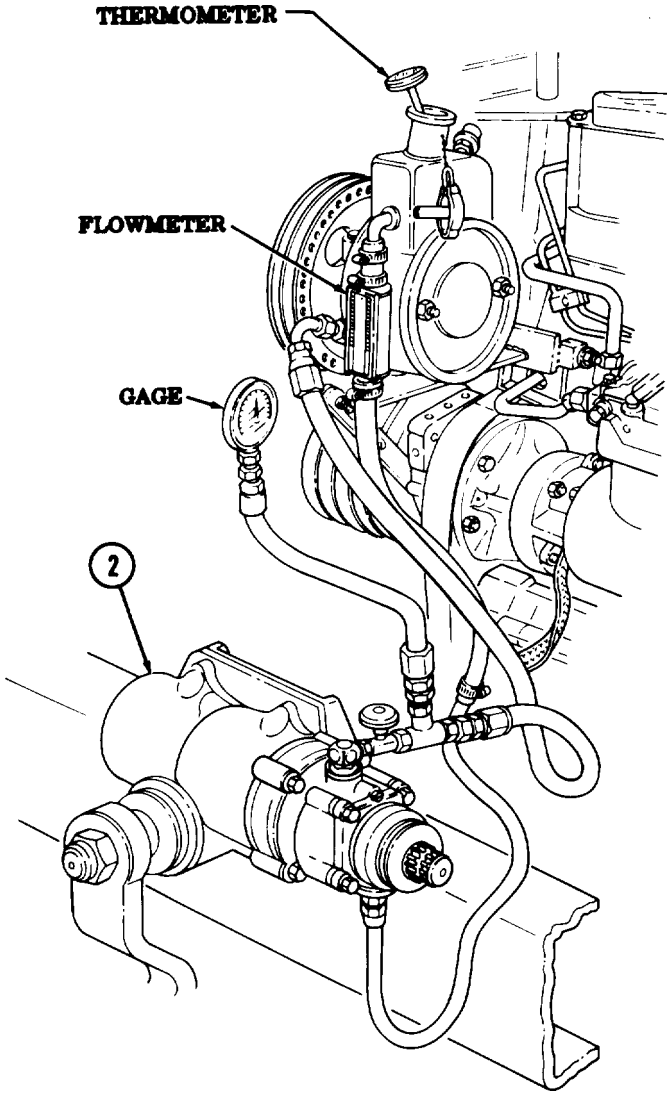

12-6. POWER STEERING TEST AND ADJUSTMENT (Contd)

e. Poppet Adjustment

1. Start engine (TM 9-2320-260-10) and warm to operating temperature. Let engine idle until end of test.

CAUTION

Do not hold steering wheel in full turn position for more than 10 seconds. Pump damage may result.

NOTE

Assistant will help with steps 2 through 12.

2. Rotate steering wheel (1) to full turn right position.
3. Loosen jamnut (5).
4. Turn poppet adjusting screw (4) counterclockwise until gage shows maximum pressure.
5. Turn poppet adjusting screw (4) clockwise until gage shows a 200-400 psi (1379-2758 kPa) drop in pressure.
6. Tighten jamnut (5) 10-15 lb-ft (14-20 N•m).
7. Rotate steering wheel (1) to full turn left position.
8. Loosen jamnut (6).
9. Turn poppet adjusting screw (7) counterclockwise until gage shows maximum pressure.
10. Turn poppet adjusting screw (7) clockwise until gage shows a 200-400 psi (1379-2758 kPa) drop in pressure.
11. Tighten jamnut (6) 20-25 lb-ft (27-34 N•m).
12. Shut down engine (TM 9-2320-260-10).

f. Sector Shaft Adjustment

1. Remove drag link (TM 9-2320-260-20).

NOTE

Assistant will help with step 2.

2. Rotate steering wheel (1) full travel in both directions and note halfway (midway) point. Position to halfway point.
3. Loosen jamnut (3).
4. Tighten adjusting screw (2) 15 lb-in. (2 N•m).
5. Turn adjusting screw (2) counterclockwise one turn.
6. Tighten jamnut (3) 20-25 lb-ft (27-34 N•m).
7. Rotate steering wheel (1) in both directions. If pulsations are felt, repeat steps 1 through 7. If pulsations continue, refer to general troubleshooting instructions (para. 2-6).
8. Install drag link (TM 9-2320-260-20).

12-6. POWER STEERING TEST AND ADJUSTMENT (Contd)

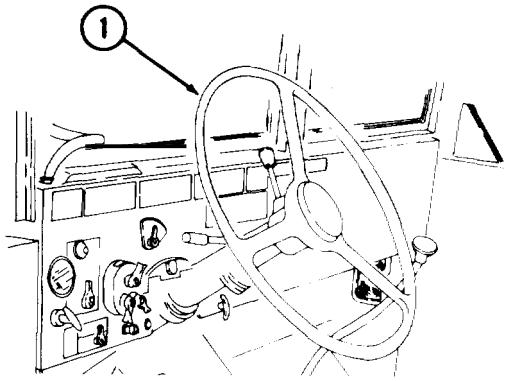

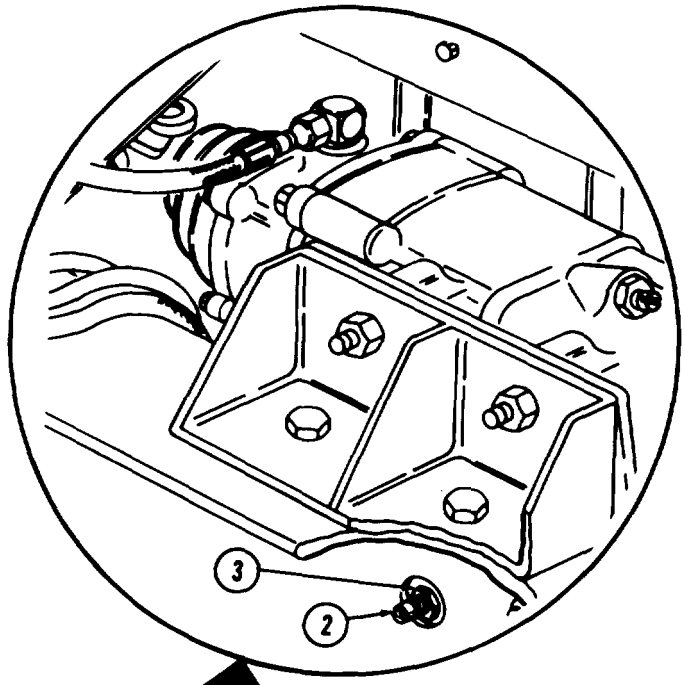

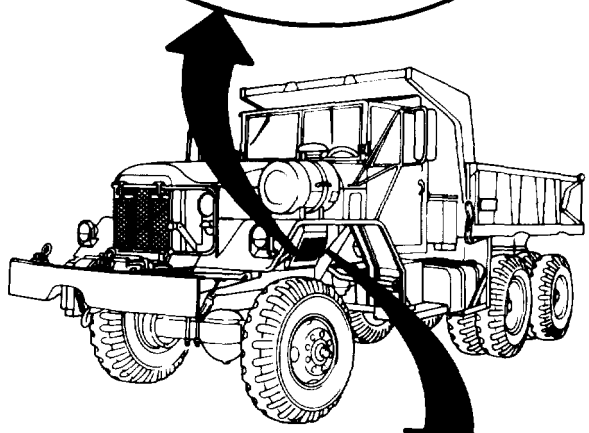

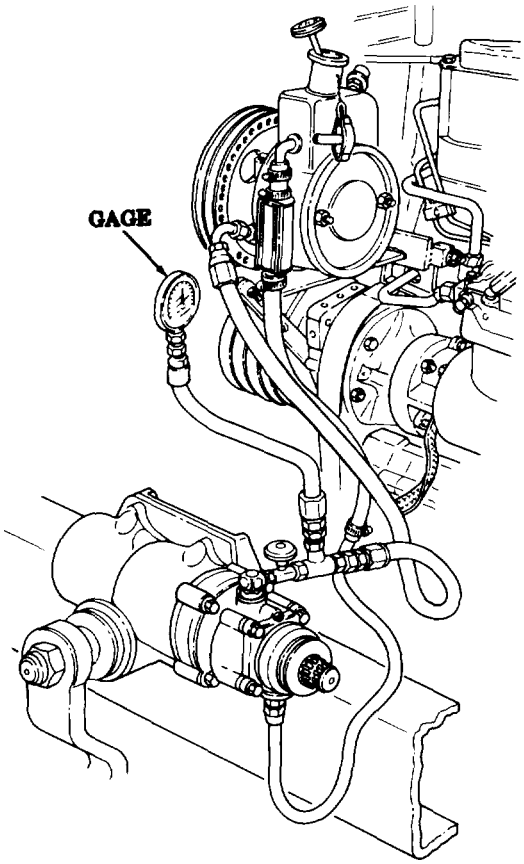

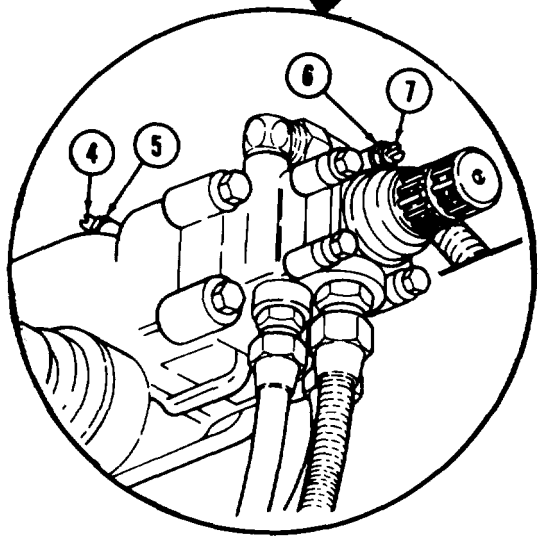

12-6. POWER STEERING TEST AND ADJUSTMENT (Contd)

g. Steering Pump Test Equipment Removal

1. Remove thermometer from filler neck (3).
2. Install filler cap (4) on filler neck (3).

NOTE

Have drainage container ready to catch power steering fluid.

3. Loosen clamp (10) and remove return hose (9) from flowmeter.
4. Loosen clamp (1) and remove flowmeter from return tube (2).
5. Install return hose (9) on return tube (2) and tighten clamp (10).
6. Disconnect pressure hose (5) and gage from tee (6).
7. Remove tee (6) from load shutoff valve (8).
8. Remove load shutoff valve (8) from elbow (7).
9. Install pressure hose (5) on elbow (7).

12-6. POWER STEERING TEST AND ADJUSTMENT (Contd)

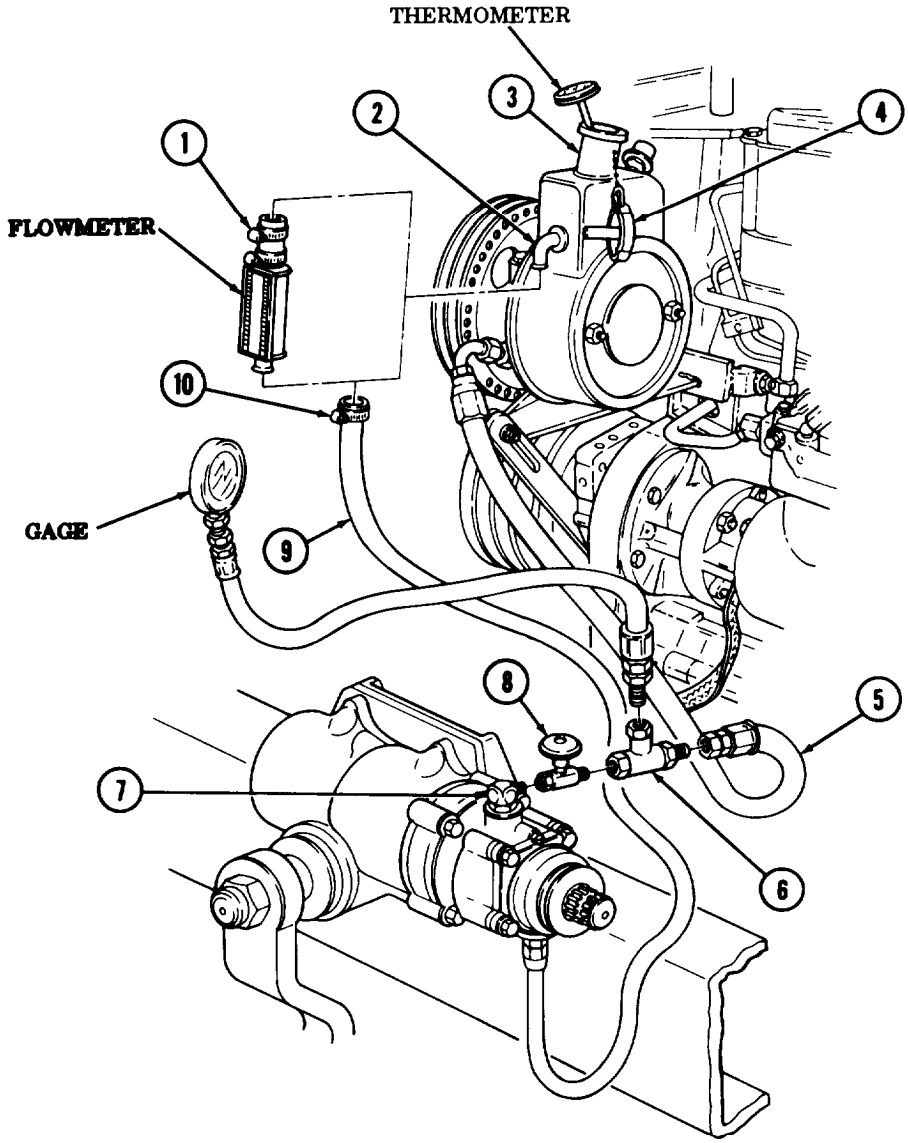

FOLLOW-ON TASKS:
- Install steering gear shield (TM 9-2320-260-20).
- Fill power steering reservoir to proper level (LO 9-2320-260-12) and check for leaks.
- Bleed hydraulic power steering system (TM 9-2320-260-20).
- Road test vehicle for proper power steering system operation (TM 9-2320-260-10).

12-7. POWER STEERING ASSIST CYLINDER MAINTENANCE

THIS TASK COVERS:

a. Disassembly
b. Cleaning and Inspection
c. Assembly

INITIAL SETUP

APPLICABLE MODELS
All

TOOLS
General mechanic's tool kit (Appendix B, Item 1)
Retaining ring pliers (Appendix B, Item 116)

MATERIALS/PARTS
Seal (Appendix D, Item 435)
Wiper ring (Appendix D, Item 345)
Back-up ring (Appendix D, Item 344)
preformed packing (Appendix D, Item **306)**

MATERIALS/PARTS (Contd)
Helical spring (Appendix D, Item 522)
Lubricating oil (Appendix C, Item 21)

REFERENCES (TM)
LO 9-2320-260-12
TM 9-2320-260-20
TM 9-2320-260-34P-1

EQUIPMENT CONDITION
Power steering assist cylinder removed (TM 9-2320-260-20).

a. Disassembly

1. Thoroughly clean exterior of steering assist cylinder (3).

NOTE

Have drainage container ready to catch oil.

2. Hold ports downward and push piston rod (7) in and out to remove oil from steering assist cylinder (3).
3. Remove three screws (12), seal retainer (11), wiper ring (10), and retainer plate (9) from steering assist cylinder (3). Discard wiper ring (10).
4. Push gland (6) in and remove retaining ring (8) from large end of steering assist cylinder (3).
5. Remove gland (6), piston (5), and piston rod (7) as an assembly from large end of steering assist cylinder (3).
6. Remove power cylinder nut (4) from piston rod (7).
7. Turn piston assembly (5) counterclockwise to remove from piston rod (7).
8. Remove gland (6) from piston rod (7).
9. Using retaining ring pliers, remove retaining ring (16) from gland (6).
10. Remove flat washer (18), seal (15), flat washer (17), ring spacer (14), backup ring (19), and preformed packing (13) from gland (6). Discard seal (15), backup ring (19), and preformed packing (13).
11. Remove two ball seats (1) and helical spring (2) from steering assist cylinder (3). Discard helical spring (2).

b. Cleaning and Inspection

NOTE

No repairs are to be made on parts. If parts are damaged, install new power steering assist cylinder.

1. For general cleaning instructions, refer to para. 2-8.
2. For general inspection instructions, refer to para. 2-9.

12-7. POWER STEERING ASSIST CYLINDER MAINTENANCE (Contd)

c. Assembly

NOTE

Coat all power steering assist cylinder components with clean lubricating oil before assembly.

1. Install new helical spring (2) and two ball seats (1) in steering assist cylinder (3).
2. Install new preformed packing (13), new backup ring (19), ring spacer (14), flat washer (18), new seal (15), and flat washer (17).
3. Using retaining ring pliers, install retaining ring (16) on gland (6).
4. Install piston assembly (5) on piston rod (7) with power cylinder nut (4). Tighten nut (4).
5. Install piston assembly (5) and piston rod (7) in steering assist cylinder (3).

CAUTION

Use care not to damage seals when passing gland assembly *over* threads on piston rod, Failure to do this may result in oil leaks.

6. Slide gland (6) over piston rod (7) and into steering assist cylinder (3).
7. Install retaining ring (8) at large end of steering assist cylinder (3). Be sure retaining ring (8) is seated in groove at top of steering assist cylinder (3).
8. Install retainer plate (9), new wiper ring (10), and seal retainer (11) on steering assist cylinder (3) with three screws (12).

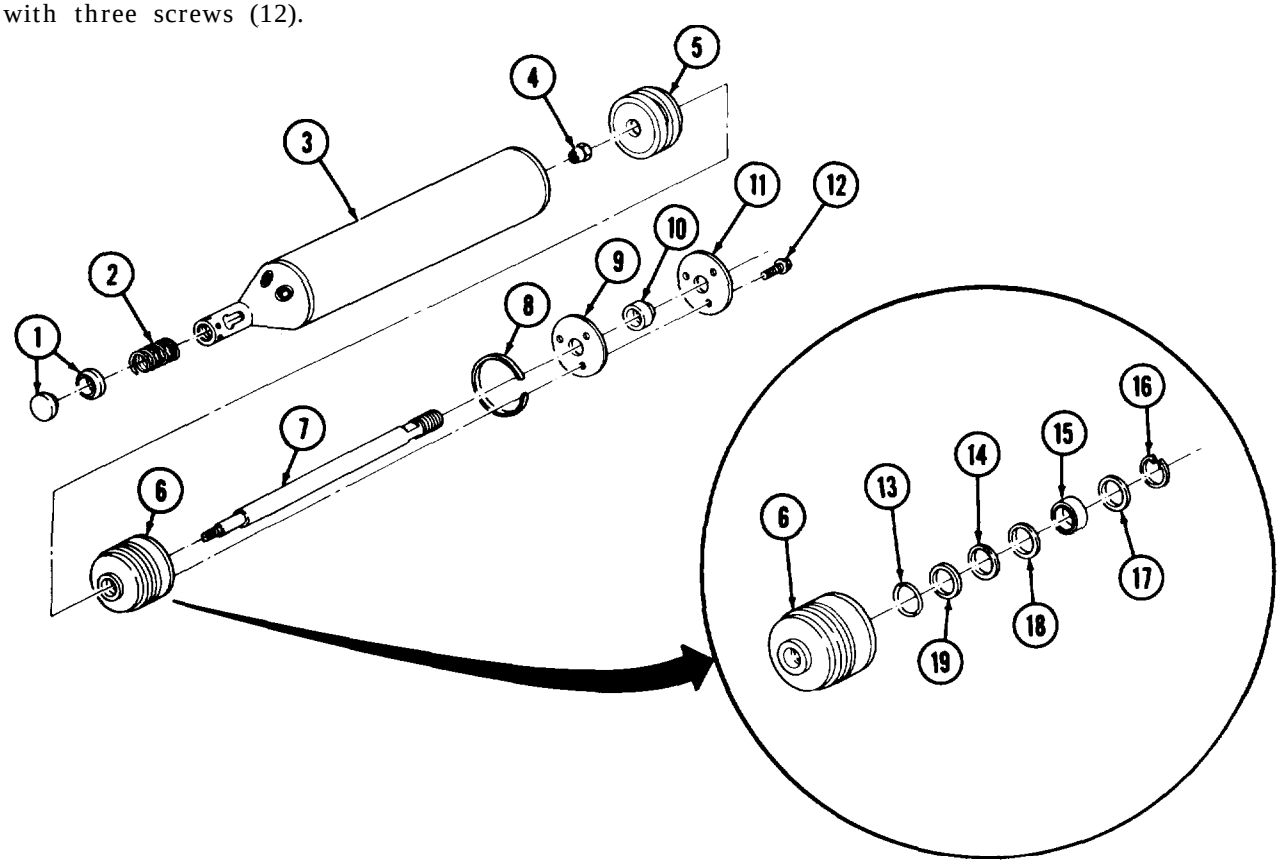

FOLLOW-ON TASKS:
- Install power steering assist cylinder (TM 9-2320-260-20).
- Fill power steering assist cylinder with lubricant (LO 9-2320-260-12).

Section Il. TIRE MAINTENANCE

12-8. TIRE MAINTENANCE

Refer to TM 9-2320-260-20 and TM 9-2610-200-24 for repair of tires and tubes.

CHAPTER 13

FRAME MAINTENANCE

13-1. FRAME MAINTENANCE INDEX

PARA. NO.	TITLE	PAGE NO.
13-2.	Frame Repair	13-1
13-3.	Fifth Wheel Maintenance (M818)	13-1
13-4.	Fifth Wheel Maintenance (M815)	13-11
13-5.	Fifth Wheel Maintenance (M819)	13-14
13-6.	Frame Alinement Inspection	13-24

13-2. FRAME REPAIR

Refer to TB 9-2300-247-40 for maintenance and repairs on frames used on the M809 series vehicles.
Refer to TM 9-2320-260-34P for authorized replacement parts used in frame repair.

13-3. FIFTH WHEEL MAINTENANCE (M818)

THIS TASK COVERS:

a. Disassembly
b. Cleaning and Inspection
c. Assembly

INITIAL SETUP

APPLICABLE MODELS
M818

TOOLS
General mechanic's tool kit (Appendix B, Item 1)
Socket set, 3/4-in. dr. (Appendix B, Item 24)
Torque wrench, 3/4-in. dr. (Appendix B, Item 2)
Socket set, 3/8-in. dr. (Appendix B, Item 144)
Inside micrometer (Appendix B, Item 9)
Outside micrometer (Appendix B, Item 8)
Lifting device
Four washers (Appendix C, Item 56)
Two screws (Appendix C, Item 33)
Two nuts (Appendix C, Item 24)
Chain

MATERIALS/PARTS
Cotter pin (Appendix D, Item 28)
Cotter pin (Appendix D, Item 30)
Two locknuts (Appendix D, Item 192)
Locknut (Appendix D, Item 184)
Two lockwashers (Appendix D, Item 249)

MATERIALS/PARTS (Contd)
Lockwasher (Appendix D, Item 219)
Locknut (Appendix D, Item 170
Safety wire (Appendix D, Item 372)

PERSONNEL REQUIRED
Two

REFERECES (TM)
LO-9-2320-260-12
TM9-2320-260-20
TM9-2320-260-34P-1

EQUIPMENT CONDITION
Fifth wheel removed (M818, TM 9-2320-260-20).

GENERAL SAFETY INSTRUCTIONS
- All personnel must stand clear during lifting operations.
- Eye protection must be worn when removing or installing springs under tension.
- Personnel must stand clear during release of plunger rack.
- Ensure lifting capacity is greater than weight of fifth wheel.

13-3. FIFTH WHEEL MAINTENANCE (M818) (Contd)

NOTE

Assistant will help with entire procedure.

a. Disassembly

1. Attach chain to fifth wheel housing (1) with four washers (2), two screws (4), and nuts (3).
2. Attach lifting device to chain. Apply tension to chain.
3. Remove two lubrication fittings (8) from fifth wheel housing (1).

CAUTION

Do not use heat to remove pivot pins from fifth wheel housing. Damage to equipment will result.

4. Remove two retaining pins (6) and pivot pins (7) from fifth wheel housing (1) and base (5),

WARNING

- All personnel must stand clear during lifting operations. A swinging or shifting load may cause injury to personnel.
- Ensure lifting capacity is greater than weight (600 lb (272 kg)) of fifth wheel. Failure to do so may result in injury to personnel or damage to equipment.

5. Remove fifth wheel housing (1) from base (5).

NOTE

- Three personnel are required for step 6,
- Fifth wheel housing must be 6 in. (15 cm) above workbench for bushing removal.

6. Position fifth wheel housing (1) on workbench with trailer mating surface (9) side down.

13-3. FIFTH WHEEL MAINTENANCE (M818) (Contd)

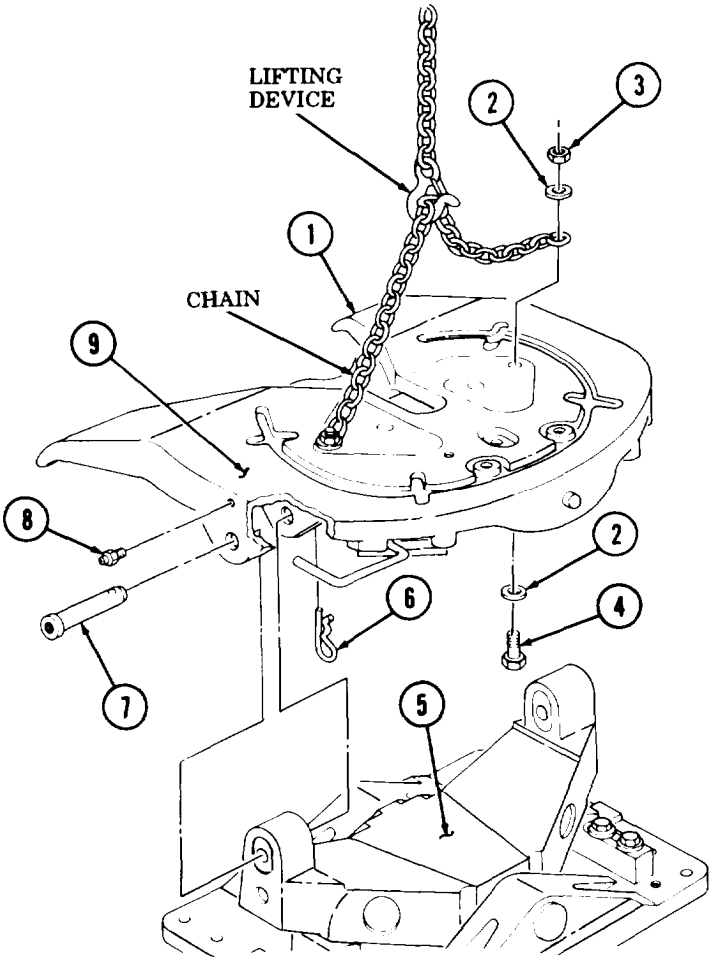

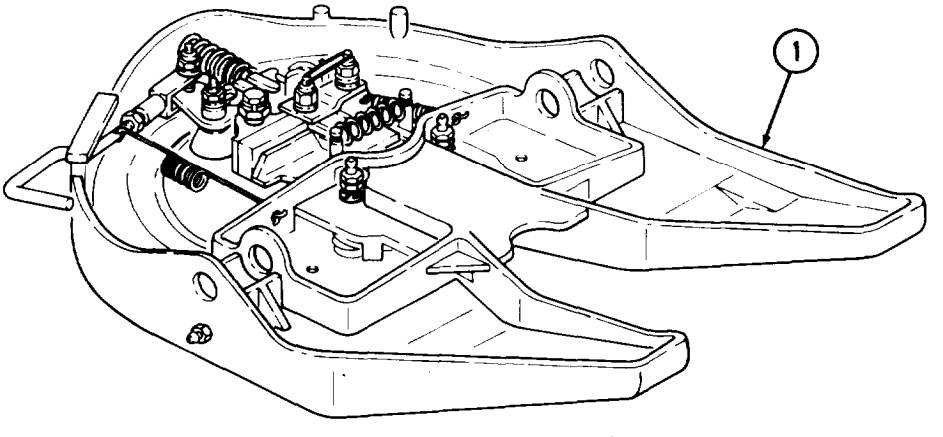

13-3. FIFTH WHEEL MAINTENANCE (M818) (Contd)

WARNING

Eye protection must be worn when removing springs under tension. Failure to do so may result in injury to personnel.

7. Remove spring (30) and cotter pin (27) from fifth wheel housing (22) and handle (1). Discard cotter pin (27).

WARNING

Plunger rack is under spring tension, Keep hands clear of plunger rack during removal, Failure to do so may cause injury to personnel.

8. Release plunger rack latch (17) and allow plunger rack (19) to slide to unloaded position.
9. 'Remove spring (16) from plunger rack latch (17) and cotter pin (15).
10. Remove cotter pin (15) from fifth wheel housing (22). Discard cotter pin (15).
11. Remove safety wire (9), two locknuts (12), washers (13), bracket (14), and plunger rack latch (17) from stud (21), screw (23), and fifth wheel housing (22). Discard safety wire (9) and locknuts (12).
12. Remove spring (7), plunger rack (19), screw (23), and spacer (20) from fifth wheel housing (22).
13. Remove screw (29), lockwasher (28), cam (26), and bushing (25) from fifth wheel housing (22). Discard lockwasher (28).
14. Remove locknut (6), washer (5), screw (3), and yoke (4) from pinion gear (18). Discard locknut (6).
15. Remove handle (1) from fifth wheel housing (22).
16. Loosen jamnut (2), remove handle (1) from yoke (4), and remove jamnut (2) from handle (1).
17. Remove locknut (8), screw (24), washer (10), spacer (11), and pinion gear (18) from fifth wheel housing (22). Discard locknut (8).
18. Remove spring (32) from two coupler jaws (31).
19. Remove two lubrication fittings (34), screws (35), lockwashers (36), and washers (37) from two coupler jaws (31). Discard lockwashers (36).
20. Remove two coupler jaws (31), compression arm (33), and two bushings (38) from fifth wheel housing (22).

13-3. FIFTH WHEEL MAINTENANCE (M818) (Contd)

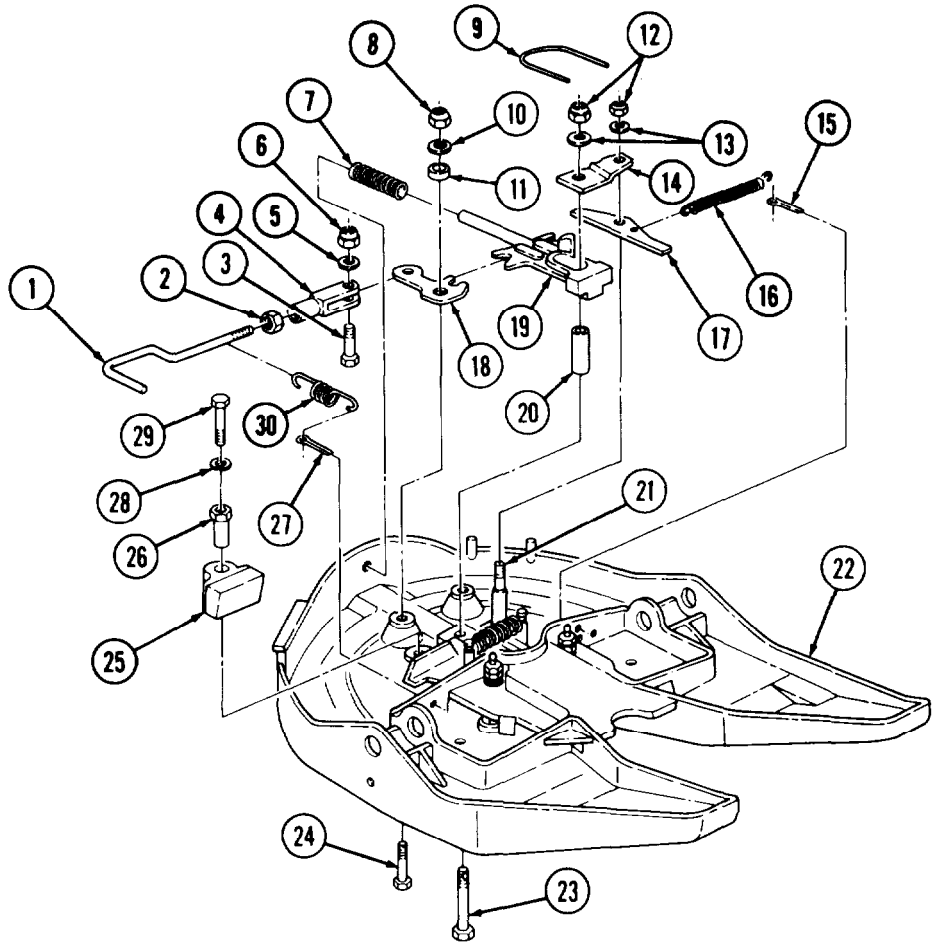

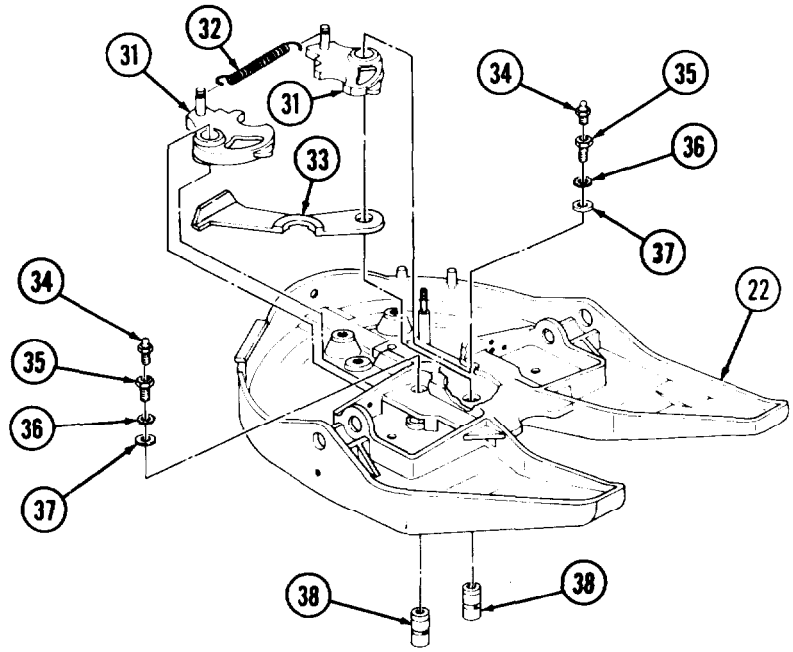

13-3. FIFTH WHEEL MAINTENANCE (M818) (Contd)

b. Cleaning and Inspection

1. For general cleaning instructions, refer to para. 2-8.
2. For general inspection instructions, refer to para. 2-9.
3. Inspect handle (1), plunger rack latch (3), pinion gear (6), stud (7), fifth wheel housing surface (8), coupler jaws (11), compression arm (14), and bushings (15) for grooves, breaks, cracks, cuts, bends, stripped threads, and damaged gear teeth. Replace part(s) if damaged.
4. Inspect springs (2), (5), (12), and (13) for bends, breaks, collapsed coils, and correct spring lengths. Refer to table 13-1, Fifth Wheel Spring Free Length, for measurements. Replace springs (2), (5), (12), or (13) if damaged or worn.
5. Inspect plunger rack (4), pivot pins (9), and cam (10) for wear. Refer to table 13-2, Fifth Wheel Wear Limits, for measurements. Replace plunger rack (4), pivot pins (9), or cam (10) if damaged or worn.

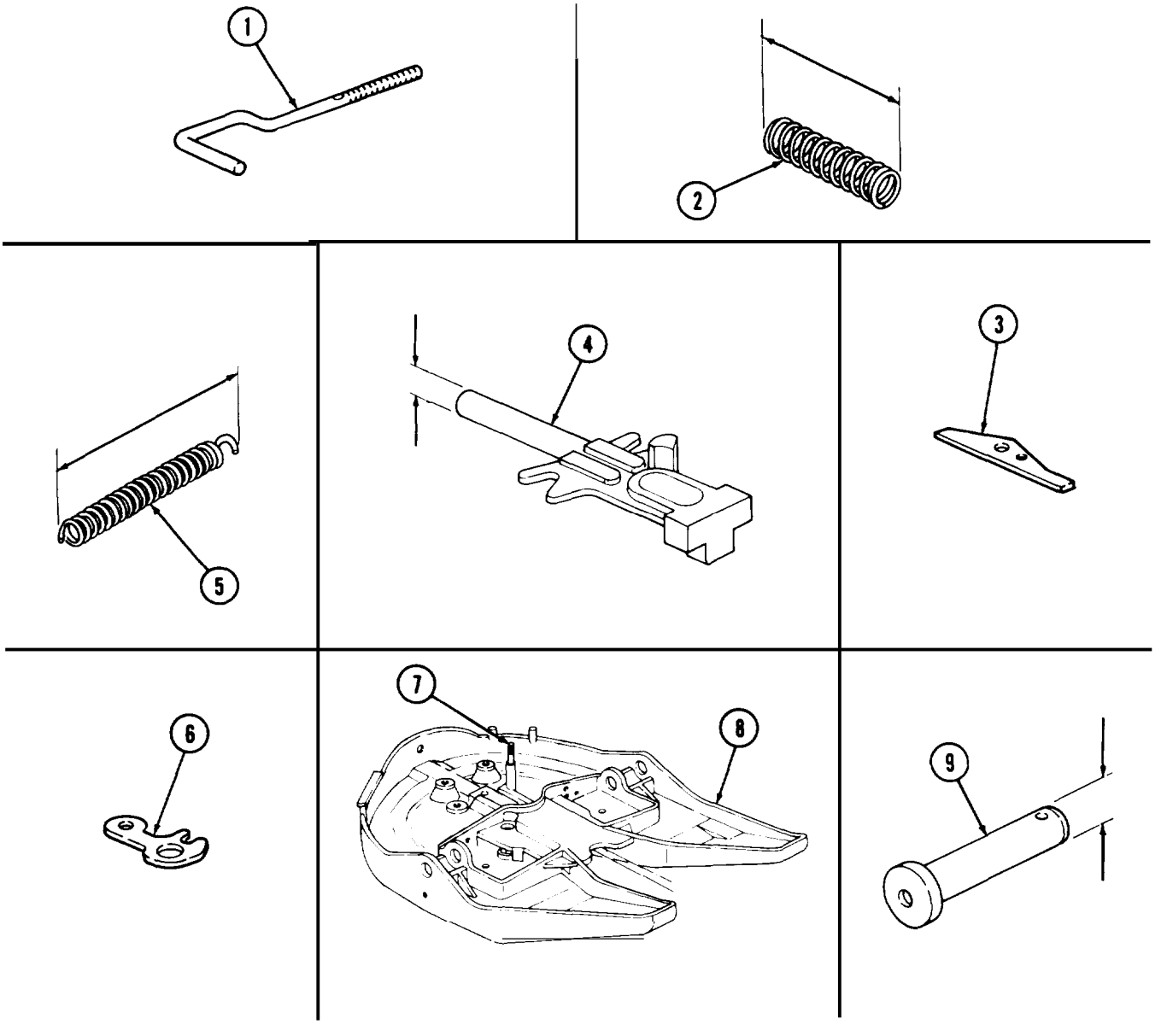

13-3. FIFTH WHEEL MAINTENANCE (M818) (Contd)

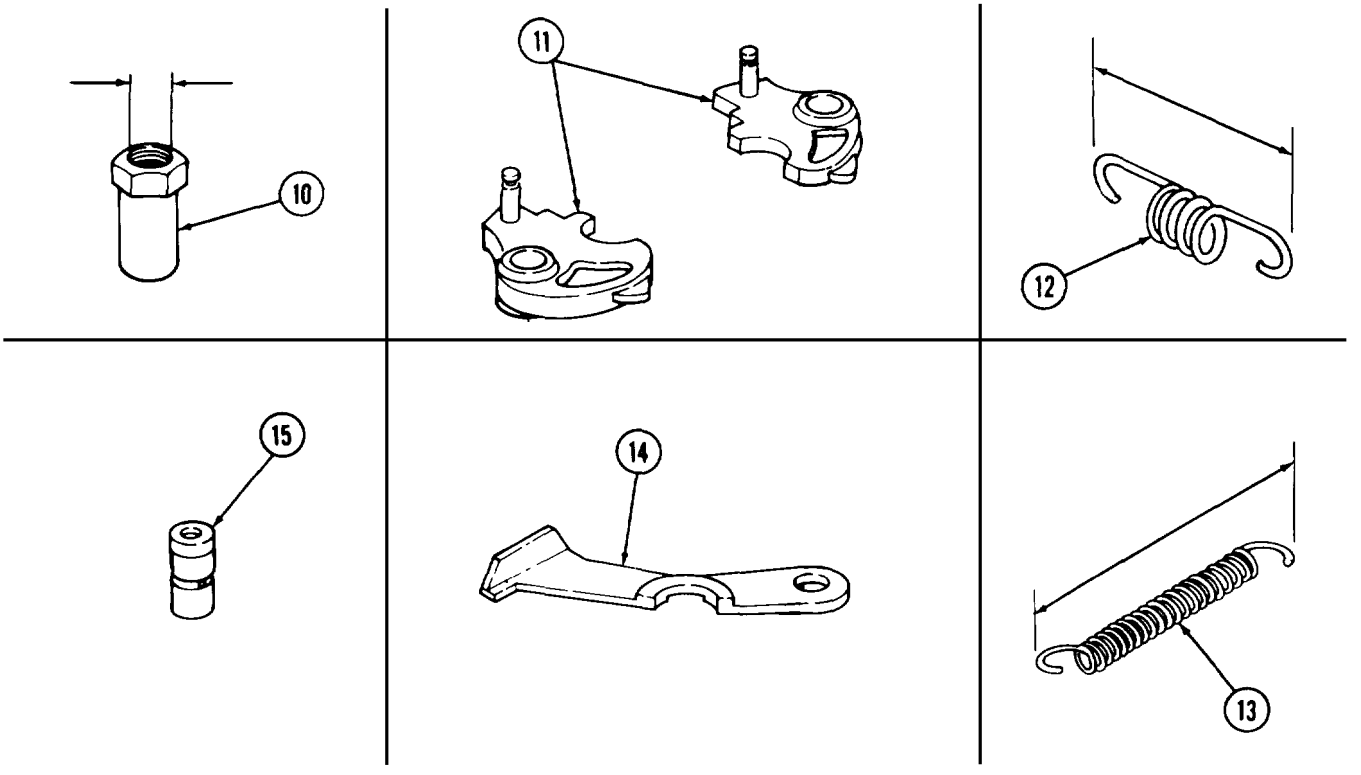

Table 13-1. Fifth Wheel Spring Free Length.

ITEM NO.	ITEM/POINT OF MEASUREMENT	SPRING FREE LENGTH	
		INCHES	MILLIMETERS
2	Locking plunger spring	7.25	184.2
5	Plunger rack latch spring	2.0625	52.388
12	Handle spring	6.00	152.4
13	Coupler jaw spring	2.31	58.674

Table 13-2. Fifth Wheel Wear Limits.

ITEM NO.	ITEM/POINT OF MEASUREMENT	WEAR LIMITS/TOLERANCES	
		INCHES	MILLIMETERS
4	Plunger rack – outer diameter	2.874-2.878	73.000-73.101
9	Pivot pins		
	Outer diameter	1.47-1.53	37.338-38.862
	Length	6.444-6.59	163.678-167.386
10	Cam – inner diameter	1.093-1.099	27.762-27.915

13-3. FIFTH WHEEL MAINTENANCE (M818) (Contd)

c. Assembly

1. Install compression arm (3) and two coupler jaws (1) in fifth wheel housing (8) with two bushings (9).
2. Aline hole in compression arm (3) with hole in fifth wheel housing (8).
3. Install two washers (7), new lockwashers (6), screws (5), and lubrication fittings (4) on two bushings (9). Tighten screws (5) 150-200 lb-ft (203-271 N•m).
4. Install spring (2) on two coupler jaws (1).
5. Install bushing (33) and cam (34) on fifth wheel housing (8) with new lockwasher (35) and screw (36).
6. Place spring (16) on plunger rack (22).
7. Install screw (31), spacer (21), and plunger rack (22) on fifth wheel housing (8).

NOTE

Add washers as needed to obtain proper height on plunger rack latch. Latch must set level with latch on plunger rack.

8. Install plunger rack latch (29), bracket (26), two washers (25), two new locknuts (24), and new safety wire (23) on screw (31) and stud (30).
9. Install new cotter pin (27) in fifth wheel housing (8) with eye of cotter pin (27) facing back of fifth wheel housing (8).

WARNING

Eye protection must be worn when installing springs under tension. Failure to do so may result in injury to personnel.

10. Install spring (28) on plunger rack latch (29) and cotter pin (27),
11. Install pinion gear (20) on fifth wheel housing (8) with screw (32), spacer (19), washer (18), and new locknut (17).
12. Install jamnut (11) on handle (10) and install handle (10) on yoke (13). Tighten jamnut (11) 80-95 lb-ft (108-129 N•m).
13. Install yoke (13) on pinion gear (20) with screw (12), washer (14), and new locknut (15).
14. Install new cotter pin (37) in fifth wheel housing (8).
15. Install spring (38) on handle (10) and cotter pin (37).

13-3. FIFTH WHEEL MAINTENANCE (M818) (Contd)

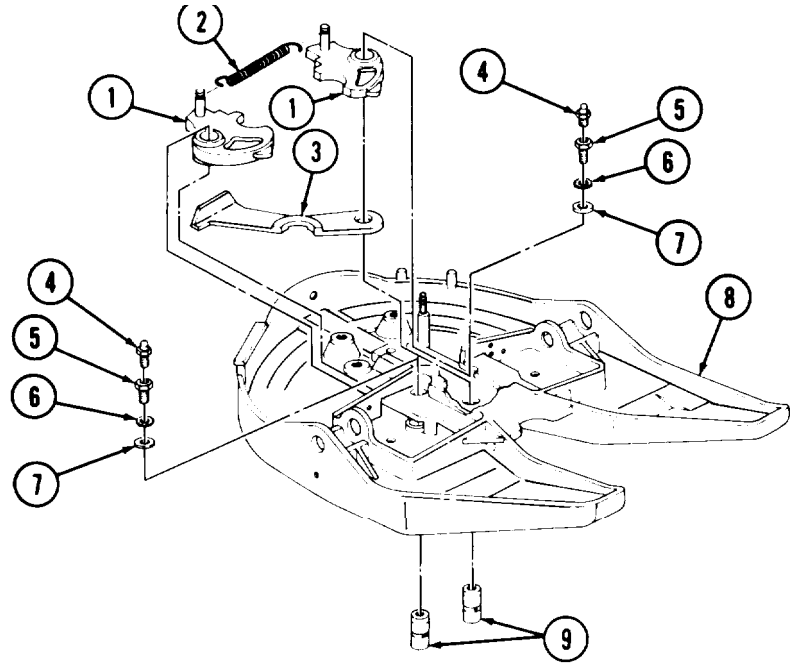

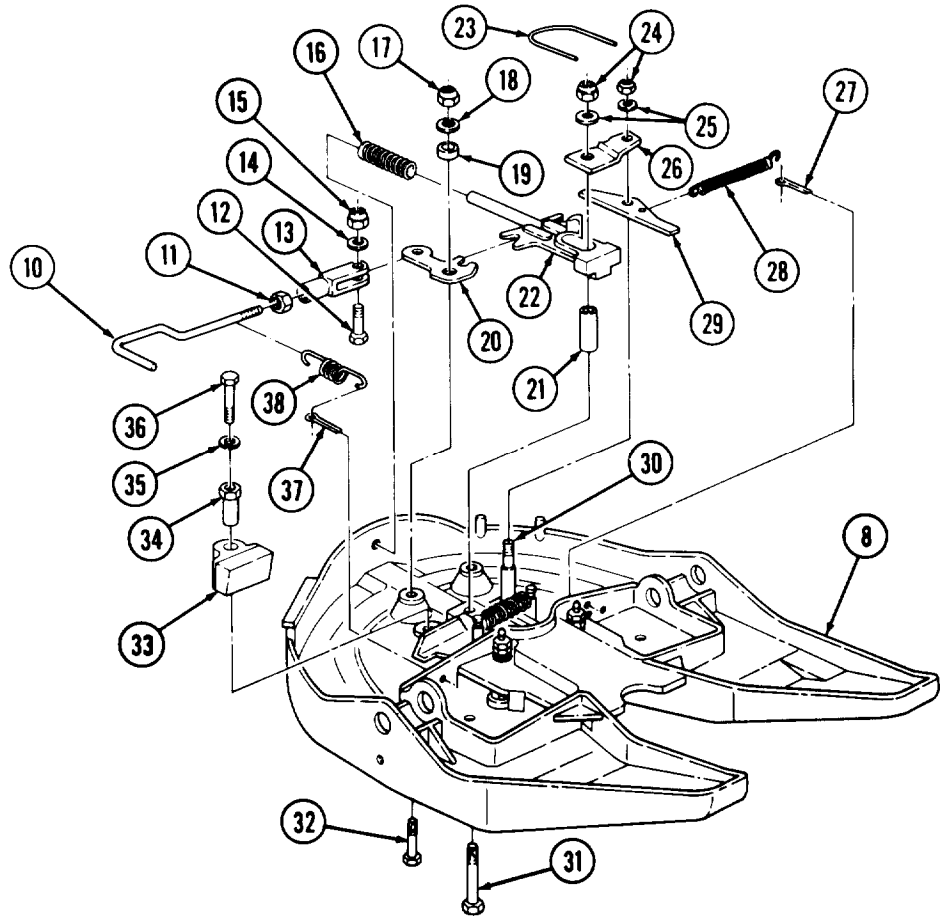

13-3. FIFTH WHEEL MAINTENANCE (M818) (Contd)

WARNING

- All personnel must stand clear during lifting operations. A swinging or shifting load may cause injury to personnel.
- Ensure lifting capacity is greater than weight (600 lb (272 kg)) of fifth wheel. Failure to do so may result in injury to personnel or damage to equipment.

16. Remove fifth wheel housing (1) from workstand.
17. Position fifth wheel housing (1) on base (5).
18. Insert two pivot pins (7) through fifth wheel housing (1) and base (5) and install with two retaining pins (6).
19. Install two lubrication fittings (8) in fifth wheel housing (1).
20. Remove lifting device from chain.
21. Remove two nuts (3), screws (4), four washers (2), and chain from fifth wheel housing (1).

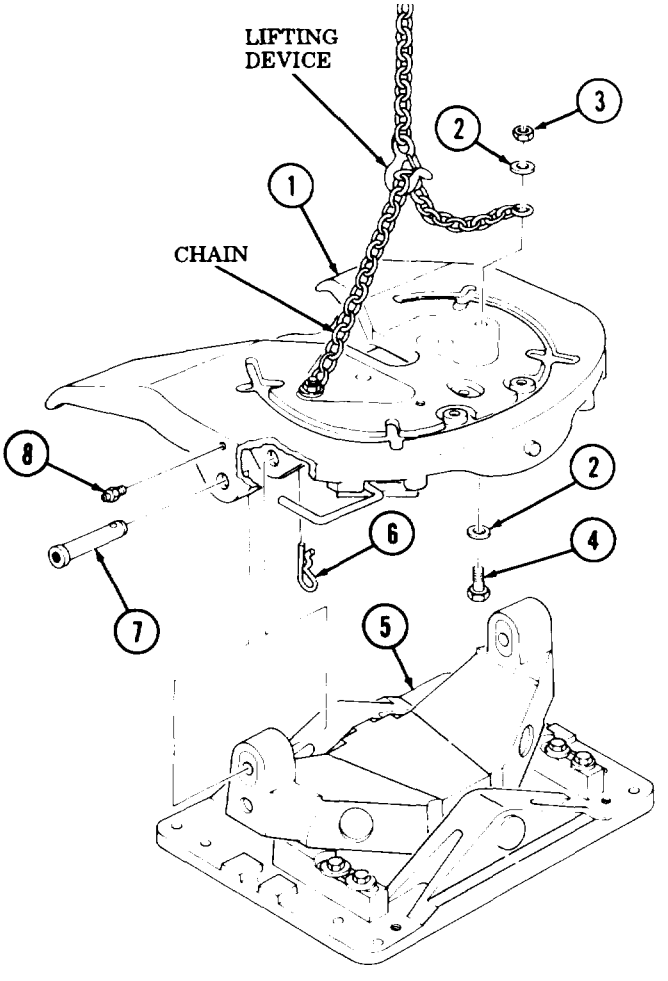

FOLLOW-ON TASKS:
- Install fifth wheel (M818) (TM 9-2320-260-20).
- Lubricate fifth wheel (LO 9-2320-260-12).

13-4. FIFTH WHEEL MAINTENANCE (M815)

THIS TASK COVERS:

a. Disassembly
b. Cleaning and Inspection
c. Assembly

INITIAL SETUP

APPLICABLE MODELS
M815

TOOLS
General mechanic's tool kit (Appendix B, Item 1)

MATERIALS/PARTS
Two cotter pins (Appendix D, Item 26)
Two locknuts (Appendix D, Item 172)
Drycleaning solvent (Appendix C, Item 48)
Rags (Appendix C, Item 32)

REFERENCES (TM)
LO 9-2320-260-12
TB 9-2300-247-40
TM 9-237
TM 9-2320-260-20
TM 9-2320-260-34P-1

EQUIPMENT CONDITION
Fifth wheel removed (M815) (TM 9-2320-260-20).

GENERAL SAFETY INSTRUCTIONS
- Keep fire extinguisher nearby when using drycleaning solvent.
- Eye protection must be worn when using compressed air.
- Compressed air source will not exceed 30 psi (207 kPa).

a. Disassembly

1. Remove two cotter pins (3) from two locking arms (5) and fifth wheel (2). Discard cotter pins (3).
2. Remove two locknuts (l), screws (4), and locking arms (5) from fifth wheel (2). Discard locknuts (1).

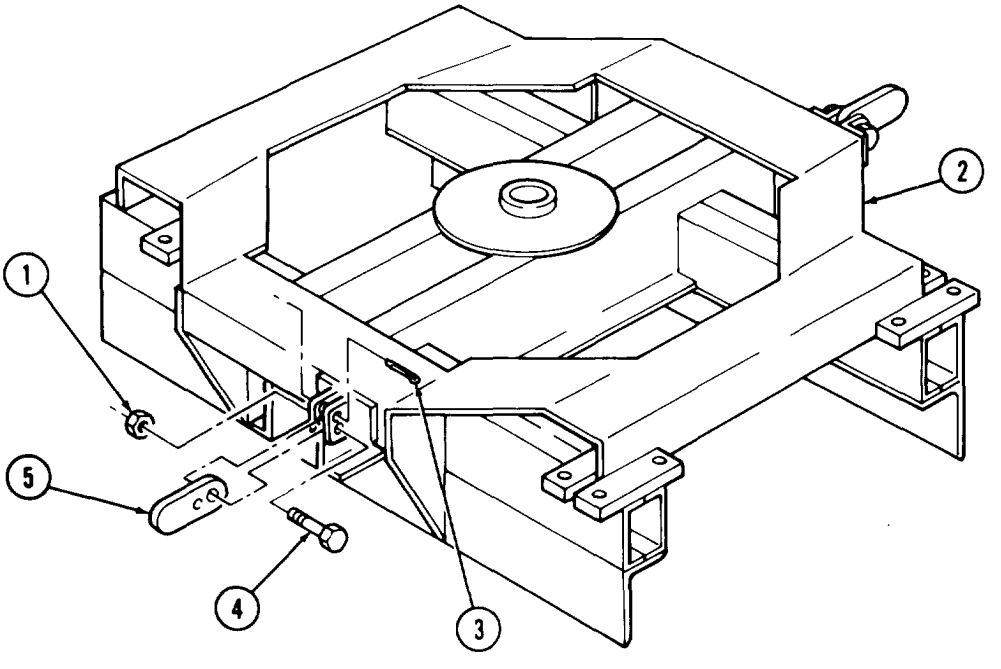

13-4. FIFTH WHEEL MAINTENANCE (M815) (Contd)

b. Cleaning and Inspection

1. Clean fifth wheel (2) with steam cleaner. Allow to air dry.

WARNING

Drycleaning solvent is flammable and will not be used near open flame. Use only in well-ventilated places. Failure to do so may result in injury to personnel.

2. Clean locking arms (5) and screws (4). Dry with clean rag.
3. Inspect locking arms (5) for bends and cracks. Replace locking arms (5) if bent or cracked.
4. Inspect fifth wheel (2) for bends, cracks, or broken welds. Repair if cracked or broken (TB 9-2300-247-40). Repair fifth wheel (2) if welds are broken (TM 9-237).

c. Assembly

1. Position two locking arms (5) on fifth wheel (2) and install with two screws (4) and new locknuts (1).
2. Install two new cotter pins (3) in two locking arms (5) and fifth wheel (2).

13-4. FIFTH WHEEL MAINTENANCE (M815) (Contd)

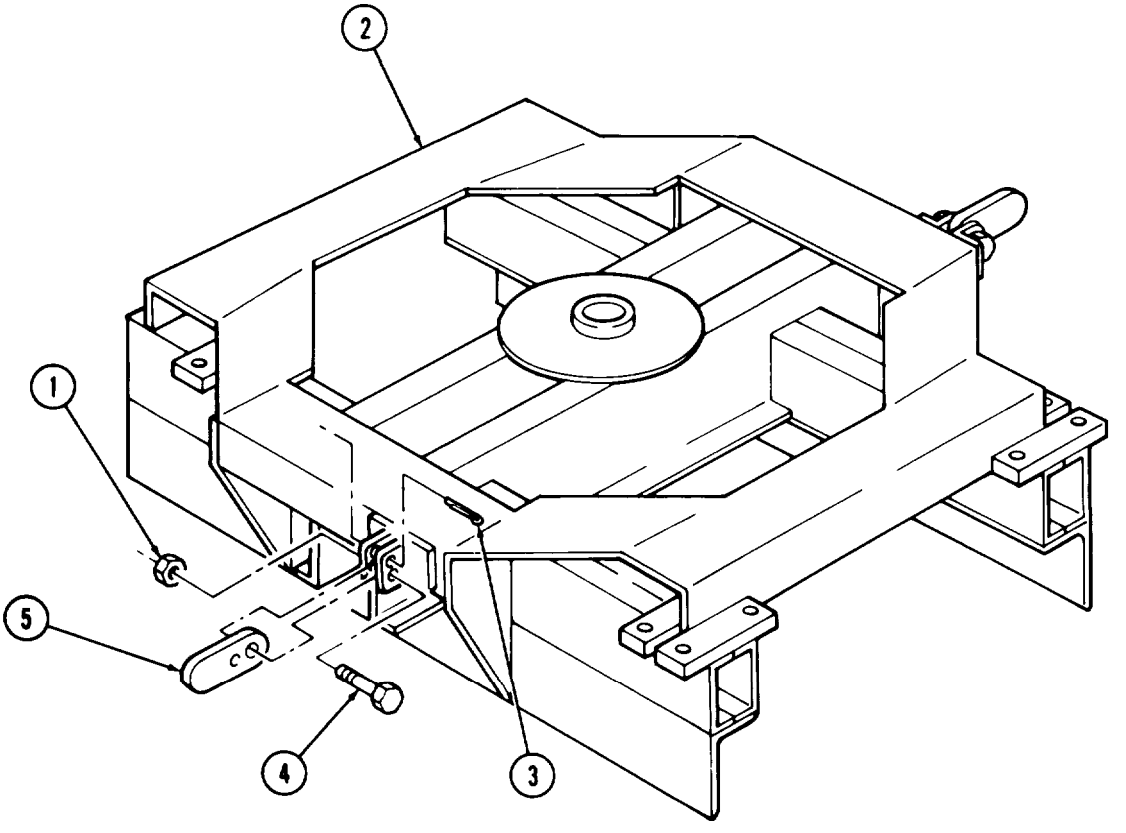

FOLLOW-ON TASKS: • Install fifth wheel (M815) (TM 9-2320-260-20).
• Lubricate fifth wheel (LO 9-2320-260-12).

13-5. FIFTH WHEEL MAINTENANCE (M819)

THIS TASK COVERS:

a. Disassembly
b. Cleaning and Inspection
c. Assembly

INITIAL SETUP

APPLICABLE MODELS
M819

TOOLS
Outside micrometer (Appendix B, Item 1)
Arbor press (Appendix B, Item 7)
Torque wrench. 1/2-in. dr. (Appendix B, Item 3)
Inside micrometer (Appendix B, Item 9)
Lifting device
Four washers (Appendix C, Item 56)
TWO screws (Appendix C, Item 33)
Two nuts (Appendix C, Item 24)
Chain

MATERIALS/PARTS
Two cotter pins (Appendix D, Item 24)
Cotter pin (Appendix D, Item 22)
Locknut (Appendix D, Item 184)
Two locknuts (Appendix D, Item 170)
Lockwasher (Appendix D, Item 223)
Two lockwashers (Appendix D, Item 218)
Safety wire (Appendix D, Item 372)
Drycleaning solvent (Appendix C, Item 48)

PERSONNEL REQUIRED
Two

REFERENCES (TM)
LO 9-2320-260-12
TM 9-2320-260-20
TM 9-2320-260-34P-1

EQUIPMENT CONDITION
Fifth wheel removed (M819) (TM 9-2320-260-20).

GENERAL SAFETY INSTRUCTIONS
All personnel must stand clear during lifting operations.
Ensure lifting capacity is greater than weight of fifth wheel.
Eye protection must be worn when removing or installing springs under tension.
Personnel must stand clear during release of plunger.
Eye protection is required when using wire brush for cleaning.
Keep fire extinguisher nearby when using drycleaning solvent.

NOTE

Assistant will help with entire procedure.

a. Disassembly

1. Attach chain to fifth wheel housing (3) with four washers (2), two screws (1), and nuts (4).
2. Attach lifting device to chain. Apply tension to chain.
3. Remove two lubrication fittings (6) from lateral pivot shaft (5).
4. Remove nut (8), lockwasher (10), and screw (11) from walking beam (9) and lateral pivot shaft (5). Discard lockwasher (10).

CAUTION

Do not use heat to remove pivot shaft, from fifth wheel housing. Damage to equipment may result.

5. Remove lateral pivot shaft (5) from walking beam (9) and fifth wheel housing (3).

WARNING

- All personnel must stand clear during lifting operations. A swinging or shifting load may cause injury to personnel.
- Ensure lifting capacity is greater than weight (600 lb (272 kg)) of fifth wheel. Failure to do so may result in injury to personnel or damage to equipment.

13-5. FIFTH WHEEL MAINTENANCE (M819) (Contd)

6. Remove fifth wheel housing (3) from base (7) and place on work bench with trailer mating surface (12) facing down.
7. Remove lifting device from chain.
8. Remove two nuts (4), screws (1), four washers (2), and chain from fifth wheel housing (3).

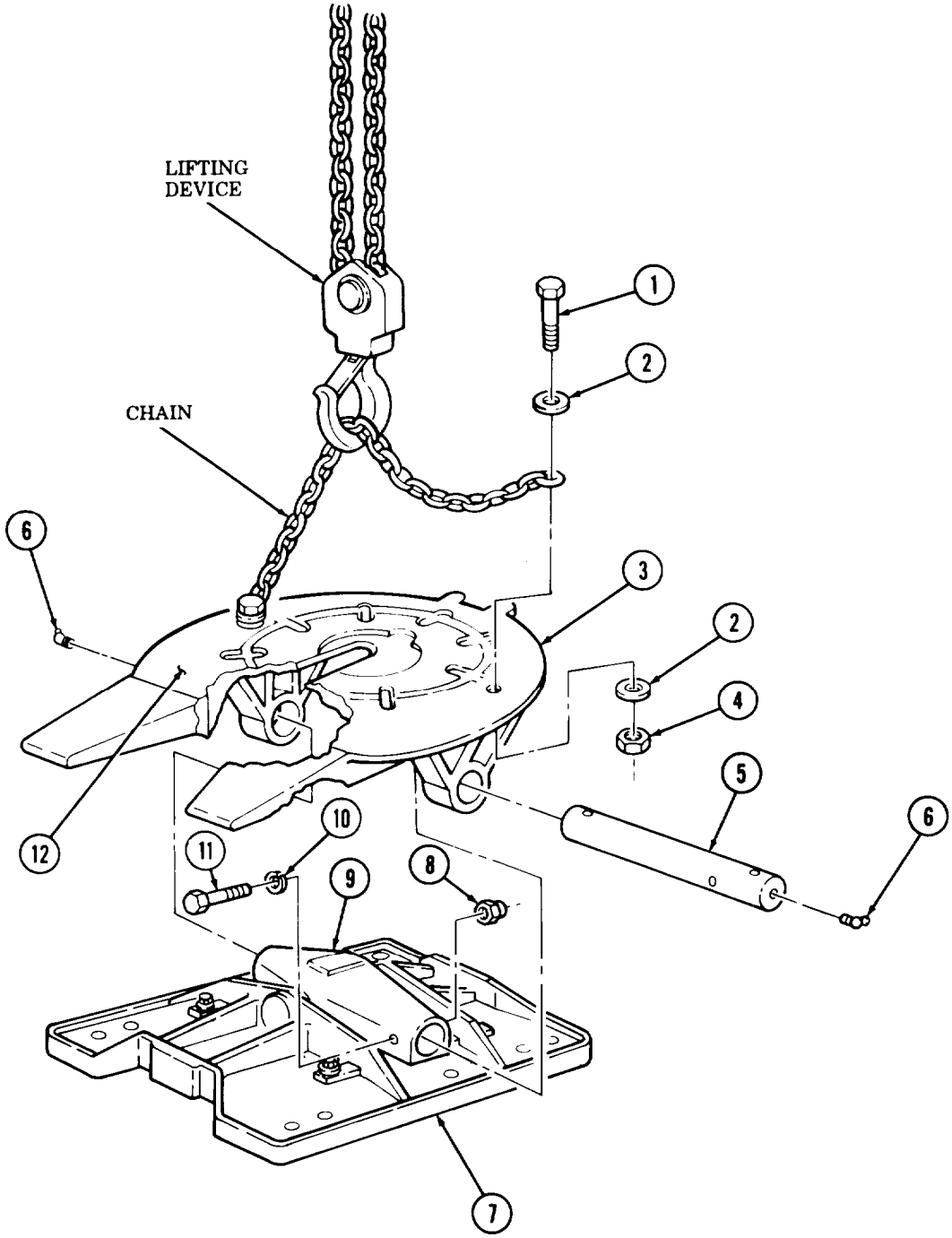

13-5. FIFTH WHEEL MAINTENANCE (M819) (Contd)

NOTE

Second assistant will help with step 9.

9. Position base (3) on arbor press.
10. Remove two lubrication fittings (1) from base pivot shaft (2).
11. Using arbor press, depress walking beam (4) against leveling springs (5) and drive base pivot shaft (2) from base (3) and walking beam (4).

WARNING

Eye protection must be worn when removing springs under tension. Failure to do so may result in injury to personnel.

12. Slowly release arbor press and remove walking beam (4) and two leveling springs (5) from base (3).
13. Remove two screws (9), washers (8), lockwashers (7), and wedges (6) from base (3). Discard lockwashers (7).

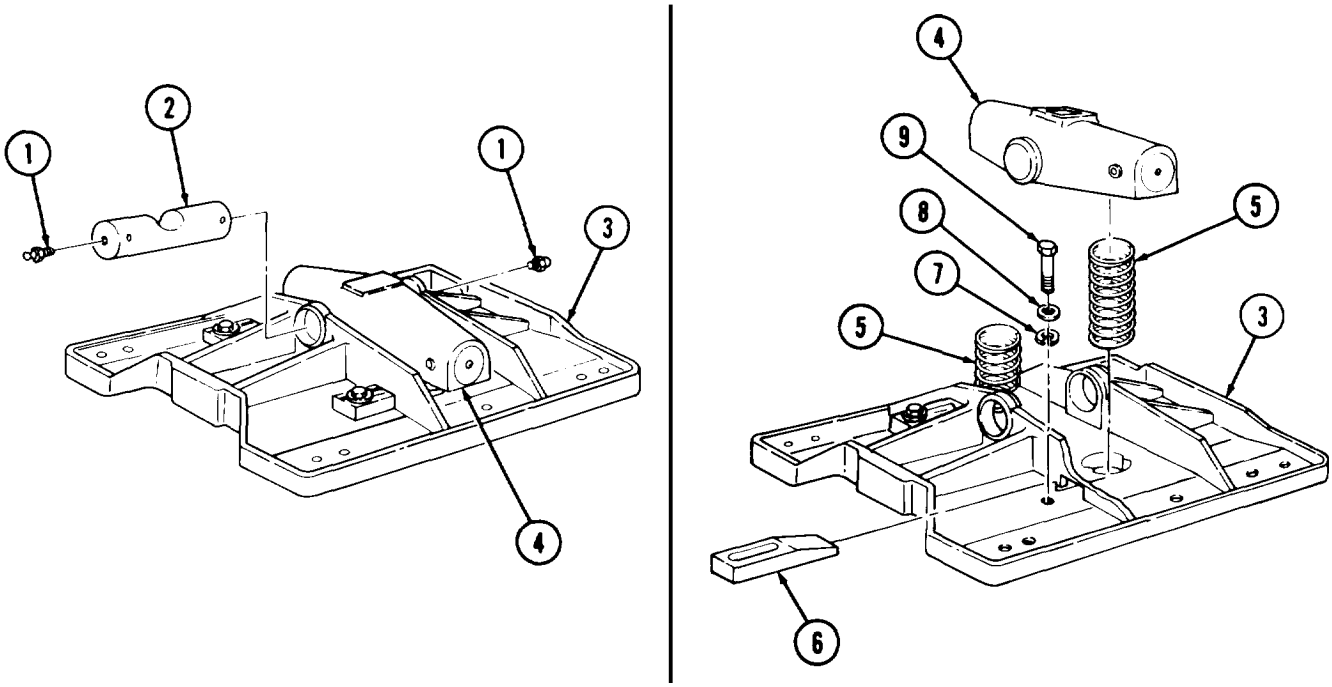

14. Remove safety wire (34), locknuts (10) and (33), and washers (11) and (32) from fifth wheel housing (18). Discard locknuts (10) and (33) and safety wire (34).

WARNING

Plunger is under spring tension. Keep hands clear of plunger during removal. Failure to do so may cause injury to personnel.

15. Lift handle (26) and remove spring (28), plunger (14), bracket (13), sleeve (12), and screw (20) from fifth wheel housing (18).
16. Remove spring (30) from plunger latch (31) and fifth wheel housing (18).
17. Remove plunger latch (31) and three washers (29) from stud (23).

13-5. FIFTH WHEEL MAINTENANCE (M819) (Contd)

18. Remove cotter pin (27), locknut (25), and handle (26) from stud (24). Discard cotter pin (27) and locknut (25).
19. Remove screw (21) and safety latch (22) from fifth wheel housing (18).
20. Remove two cotter pins (17) and lubrication fittings (16) from two coupler jaw pins (19). Discard cotter pins (17).
21. Remove two coupler jaw pins (19) and two coupler jaws (15) from fifth wheel housing (18).

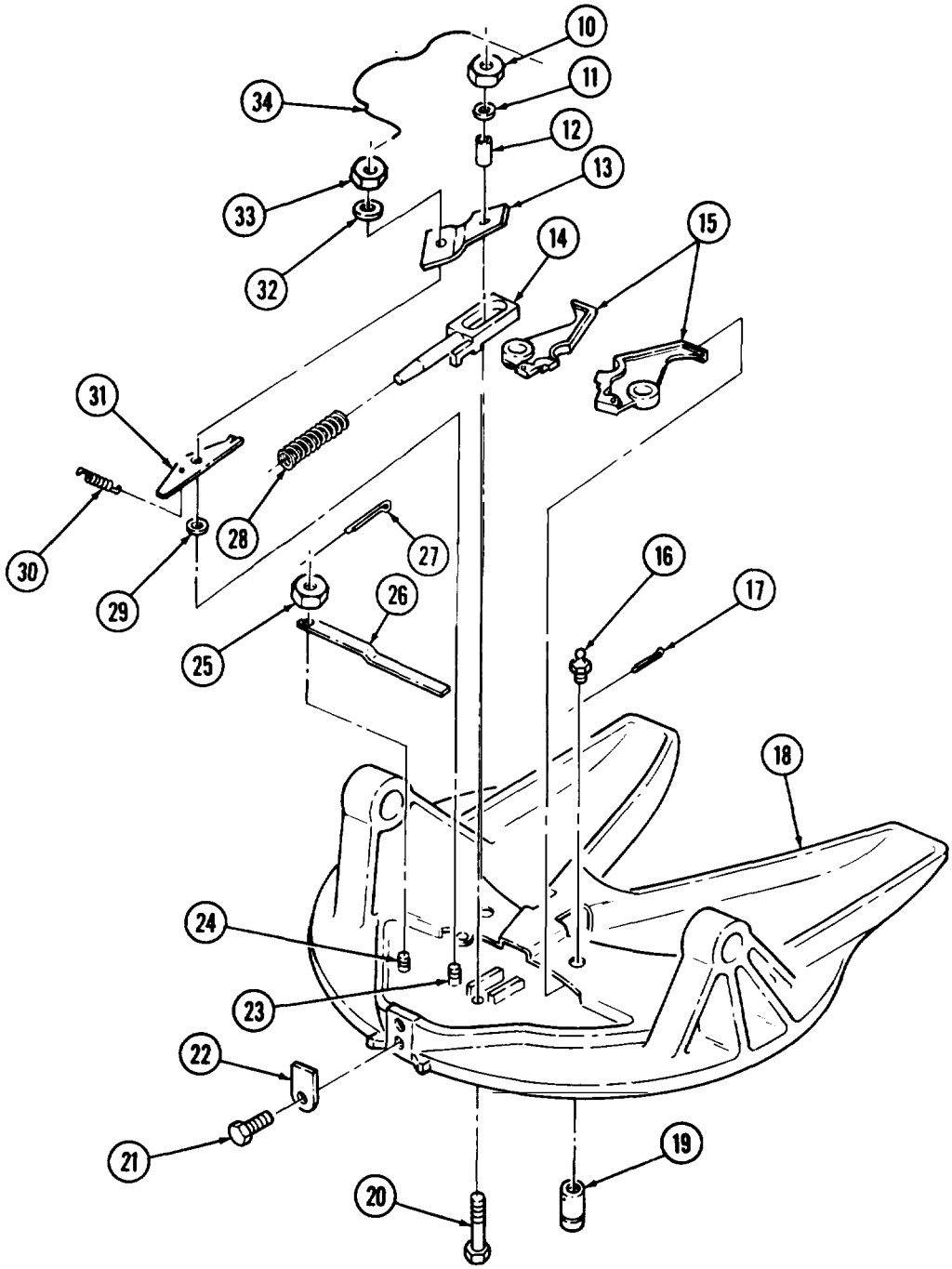

13-5. FIFTH WHEEL MAINTENANCE (M819) (Contd)

b. Cleaning and Inspection

1. For general cleaning instructions, refer to para. 2-8.
2. For general inspection instructions, refer to para. 2-9.

WARNING

Eye protection is required when using wire brush for cleaning. Failure to do so may result in injury to personnel.

3. Clean larger parts with steam and wire brush.

WARNING

Drycleaning solvent is flammable and will not be used near open flame. Use only in well-ventilated places. Failure to do so may result in injury to personnel.

4. Clean smaller parts with drycleaning solvent. Allow to air dry.
5. Inspect coupler jaws (2), fifth wheel housing surface (3), studs (4) and (5), base (7), walking beam (9), bores (10), plunger latch (14), and handle (15) for cracks, breaks, pitting, scoring, bends, grooves, and gouges. Replace part(s) if damaged.
6. Inspect springs (8), (12), and (13) for bends, breaks, and collapsed coils. Measure spring lengths. Refer to table 13-3, Spring Free Length, for measurements. Replace springs (8), (12), or (13) if damaged or worn.
7. Inspect plunger (1), base pivot shaft (6), and lateral pivot shaft (11) for wear. Refer to table 13-4, Fifth Wheel Wear Limits, for measurements. Replace plunger (1), base pivot shaft (6), or lateral pivot shaft (11) if damaged or worn.

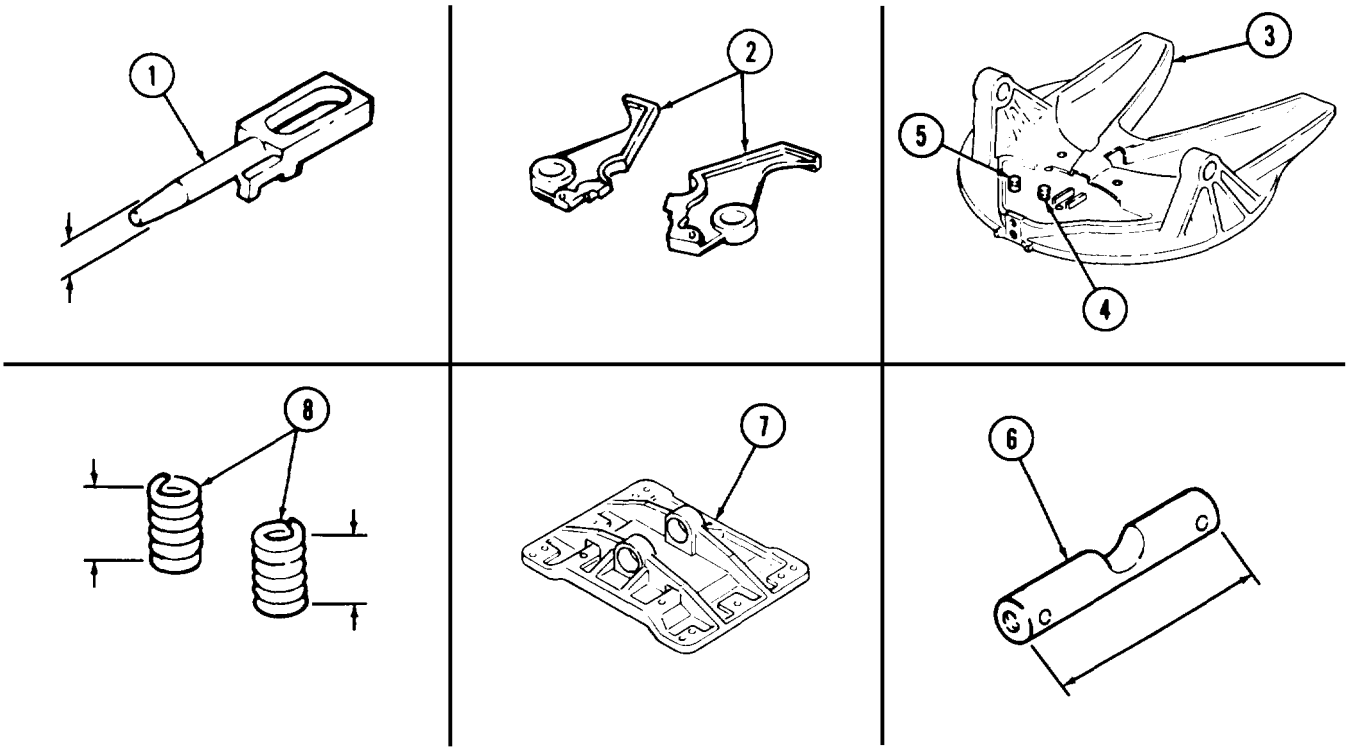

13-5. FIFTH WHEEL MAINTENANCE (M819) (Contd)

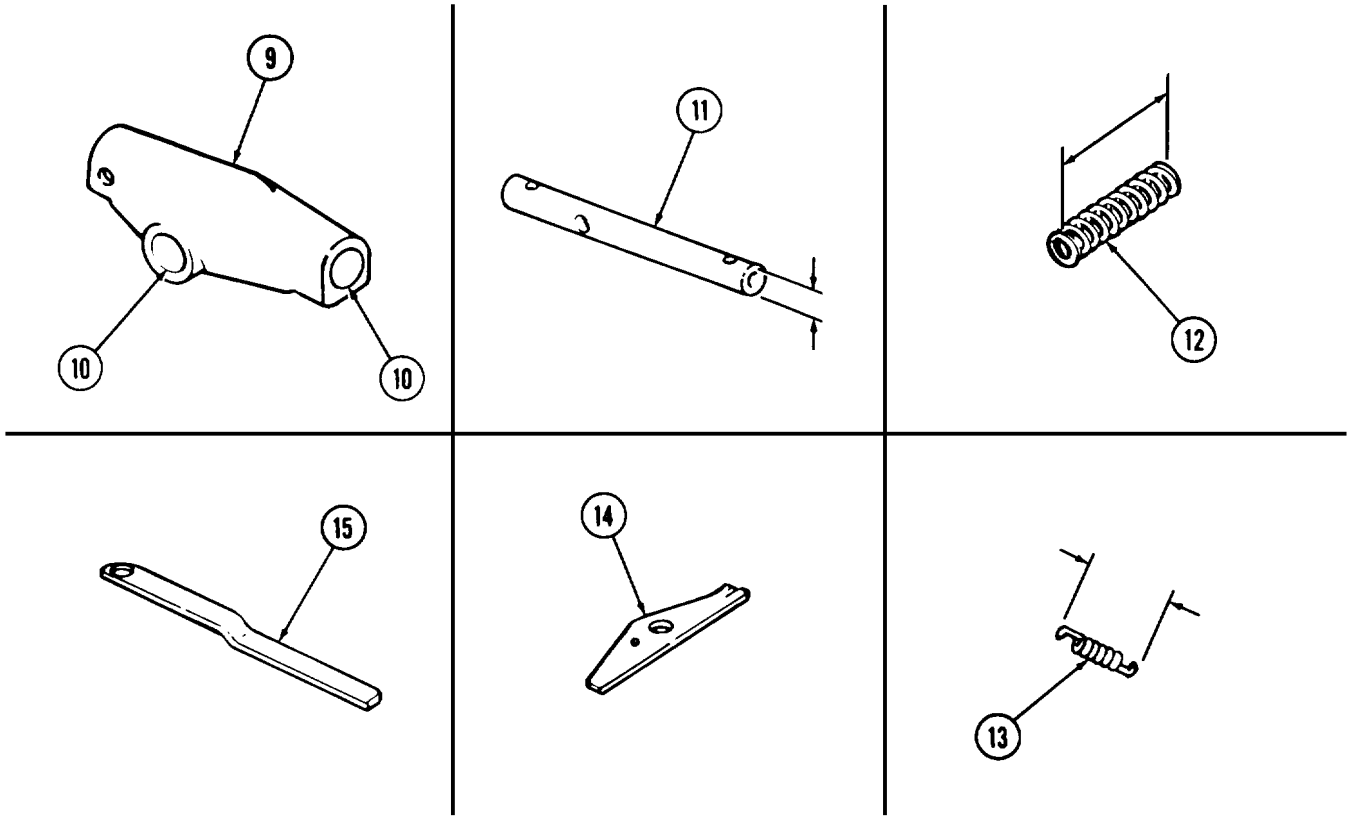

Table 13-3. Fifth Wheel Spring Free Length.

ITEM NO.	ITEM/POINT OF MEASUREMENT	SPRING FREE LENGTH	
		INCHES	MILLIMETERS
8	Leveling springs	3.25	82.550
12	Plunger latch spring	2.625	66.675
13	Plunger spring	7.25	184.150

Table 13-4. Fifth Wheel Wear Limits.

ITEM NO.	ITEM/POINT OF MEASUREMENT	WEAR LIMITS/TOLERANCES	
		INCHES	MILLIMETERS
1	Plunger – outer diameter	0.640-0.700	16.256-17.780
6	Base pivot shaft – length	10.270-10.390	260.858-263.906
11	Lateral pivot shaft – diameter	1.996-2.000	50.698-50.800

13-5. FIFTH WHEEL MAINTENANCE (M819) (Contd)

c. Assembly

1. Install two coupler jaw pins (10) through fifth wheel housing (9).
2. Install two coupler jaws (6) on coupler jaw pins (10) and fifth wheel housing (9).
3. Install two new cotter pins (8) through coupler jaw pins (10) and install two lubrication fittings (7) on coupler jaw pins (10).
4. Install safety latch (13) and screw (12) on fifth wheel housing (9).
5. Install handle (17) on stud (15) and fifth wheel housing (9) with new locknut (16) and new cotter pin (18).
6. Position screw (11) and sleeve (3) on fifth wheel housing (9).

WARNING

Eye protection must be worn when installing springs under tension. Failure to do so may result in injury to personnel.

7. Position spring (19) on plunger (5).
8. On fifth wheel housing (9) position plunger (5) and install spring (19) over screw (11) in fifth wheel housing (9).

NOTE

Add washers as needed to obtain proper height on plunger latch. Plunger latch should be level with plunger.

9. Install three washers (20) and plunger latch (22) On stud (14).
10. Install spring (21) on plunger latch (22) and fifth wheel housing (9).
11. Position bracket (4) over screw (11), stud (15), plunger (5), and plunger latch (22)
12. Install bracket (4) with washers (2) and (23) and new locknuts (1) and (24).
13. Install new safety wire (25) through locknuts (1) and (24).

13-5. FIFTH WHEEL MAINTENANCE (M819) (Contd)

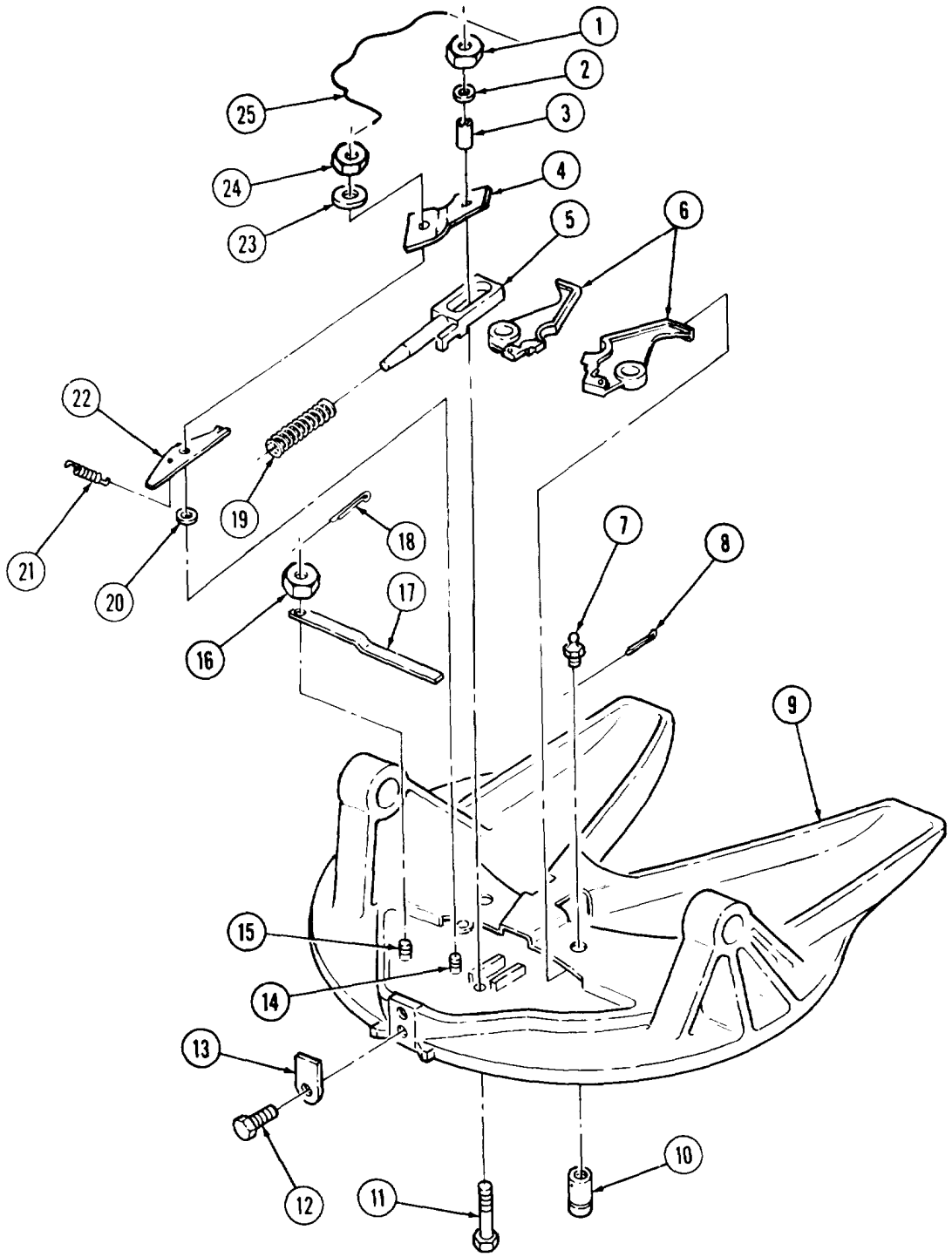

13-5. FIFTH WHEEL MAINTENANCE (M819) (Contd)

14. Position base (3) on arbor press.

WARNING

Eye protection must be worn when installing springs under tension. Failure to do so may result in injury to personnel.

15. Install two leveling springs (2) on base (3).
16. Position walking beam (1) on base (3) and leveling springs (2).

NOTE

Groove of base pivot shaft must face upwards.

17. Using arbor press, depress walking beam (1) and install base pivot shaft (9) in walking beam (1) and base (3).
18. Install two lubrication fittings (8) in base pivot shaft (9).

WARNING

- All personnel must stand clear during lifting operations. A swinging or shifting load may cause injury to personnel.
- Ensure lifting capacity is greater than weight (600 lb (272 kg)) of fifth wheel. Failure to do so may result in injury to personnel or damage to equipment.

19. Attach chain to fifth wheel housing (12) with two screws (10), four washers (11) and nuts (13).
20. Attach lifting device to chain. Apply tension to chain.
21. Lower fifth wheel housing (12) onto base (3) alining holes in fifth wheel housing (12) with holes in walking beam (1).
22. Install lateral pivot shaft (14) in fifth wheel housing (12) alining hole (16) in lateral pivot shaft (14) with hole (17) in walking beam (1).
23. Install screw (20), new lockwasher (19), and nut (18) on walking beam (1) and lateral pivot shaft (14). Tighten nut (18) 30-40 lb-ft (41-54 N•m).
24. Install two lubrication fittings (15) in lateral pivot shaft (14).
25. Install two wedges (4), new Iockwashers (5), washers (6), and screws (7) on base (3).
26. Remove lifting device from chain.
27. Remove two nuts (13), screws (10), and four washers (11) from fifth wheel housing (12).

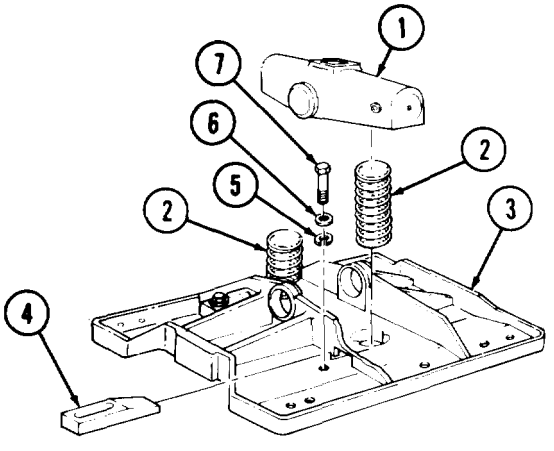

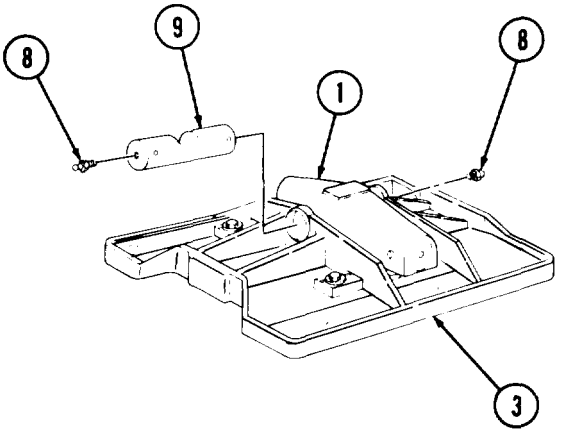

13-5. FIFTH WHEEL MAINTENANCE(M819) (Contd)

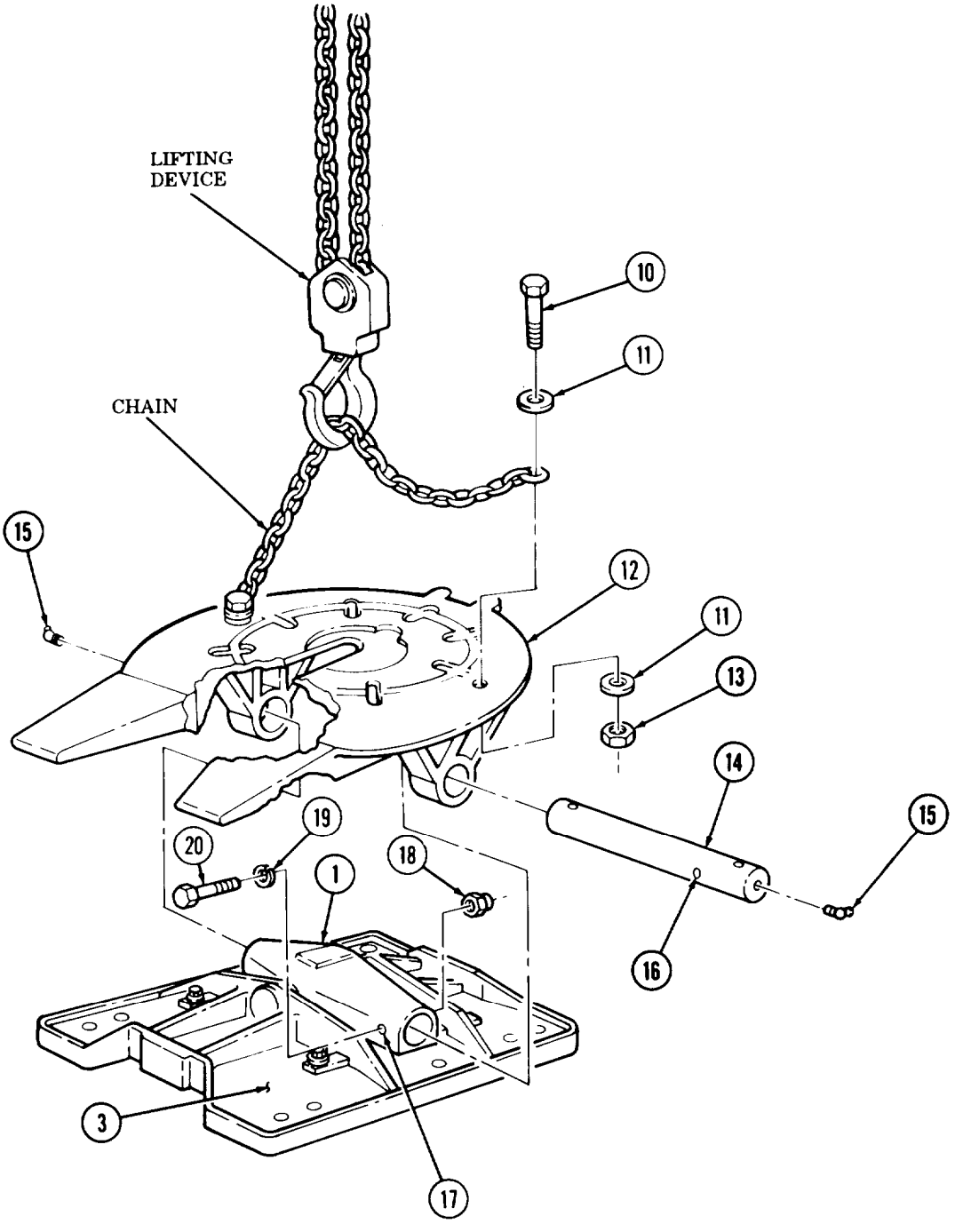

FOLLOW-ON TASKS: • Install fifth wheel (M819) (TM 9-2320-260-20)
• Lubricate fifth wheel (LO 9-2320-260-12).

13-6. FRAME ALINEMENT INSPECTION

THIS TASK COVERS:

a. Frame Leveling
b. Horizontal Bow Inspection
c. Frame Squareness
d. Vertical Bow Inspection

INITIAL SETUP

APPLICABLE MODELS
All

TOOLS
General mechanic's tool kit (Appendix B, Item 1)
Tape measure (Appendix B, Item 133)
Plumb bob (Appendix B, Item 134)
Two straightedges (Appendix B, Item 69)
Hydraulic jack
Wheel chocks

MATERIALS/PARTS
Tape, masking (Appendix C, Item 52)
Twine (Appendix C, Item 54)

PERSONNEL REQUIRED
Two

REFERENCES (TM)
TM 9-2320-260-10
TM 9-2320-260-20
TM 9-2320-260-34P-1

EQUIPMENT CONDITION
- Vehicle undercarriage clean and free of mud and debris.
- Tires checked for proper air pressure (TM 9-2320-260-10).

NOTE

- Frame alinement inspection is the same for vehicles with six, seven, eight, or nine frame crossmembers. This procedure covers frame alinement inspection on a vehicle with six crossmembers.
- Loose or missing crossmember rivets, loose or broken crossmembers, or damaged frame rails must be repaired prior to inspection.
- Ensure inspection procedure is performed on a flat, level surface.
- Assistant will help with entire procedure.

a. Frame Leveling

1. Drive truck into inspection position from a 12 fl. (3.7 m) straight line of travel. Apply parking brake (TM 9-2320-260-10) and chock wheels (TM 9-2320-260-10).
2. Using tape measure, determine distance from floor to bottom of frame rails (1) in front of crossmember (2). If one frame rail (1) is lower, use hydraulic jack and raise one side of front axle to level frame rails (1) to within 0.125 in. (3 mm) of each other.
3. Using tape measure, determine distance from floor to bottom of rear frame rails (1) at crossmember (3). If one frame rail (1) is lower, use hydraulic jack and raise one side of rear-rear axle to adjust frame rails (1) to within 0.125 in. (3 mm) of each other.

b. Horizontal Bow Inspection

NOTE

For horizontal bow inspection, the front 20 ft. (6 m) of frame rail (measured fron front to rear) and the rear 20 ft (6 m) of frame rail (measured from rear to front) are measured separately, This will cause an overlap in measurement.

1. Tape one 8 x 10.5 in. (20 x 27 cm) sheet of white paper to floor under each end of frame crossmember (4) and in front of crossmembers (3) and (2) where attached to frame rails (1).

13-6. FRAME ALINEMENT INSPECTION (Contd)

2. Tape one 8 x 10.5 in. (20 x 27 cm) sheet of white paper to floor under each front frame section (5).

NOTE

Ensure plumb bob string is placed flat against frame rails and free of obstructions such as bolts, rivets, brackets, and rear springs. Allow plumb bob to stop swinging before making mark on paper.

3. Hold string and plumb bob to outside of frame rails (1) and above paper, Accurately locate point on paper directly below plumb bob.
4. Carefully mark spot (6) on each paper directly below plumb bob point.

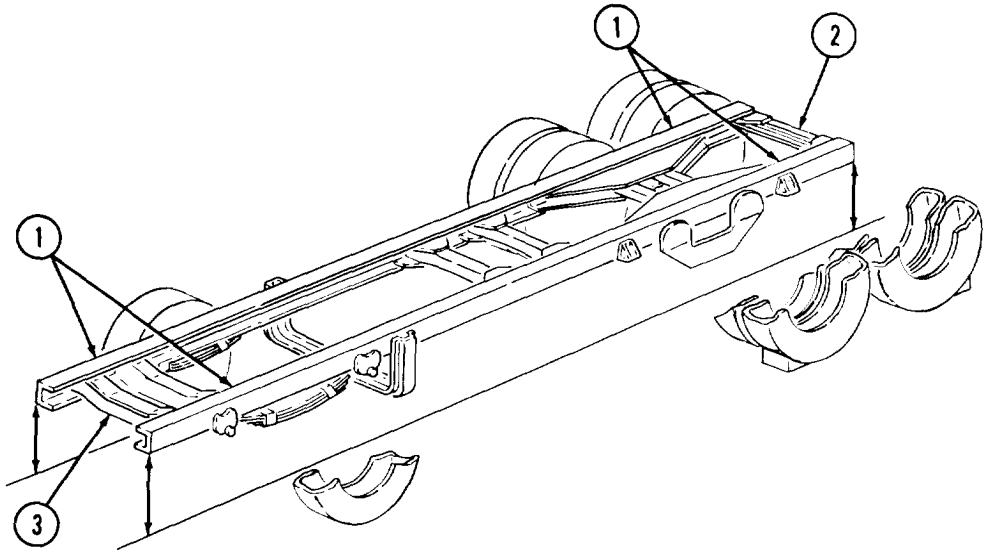

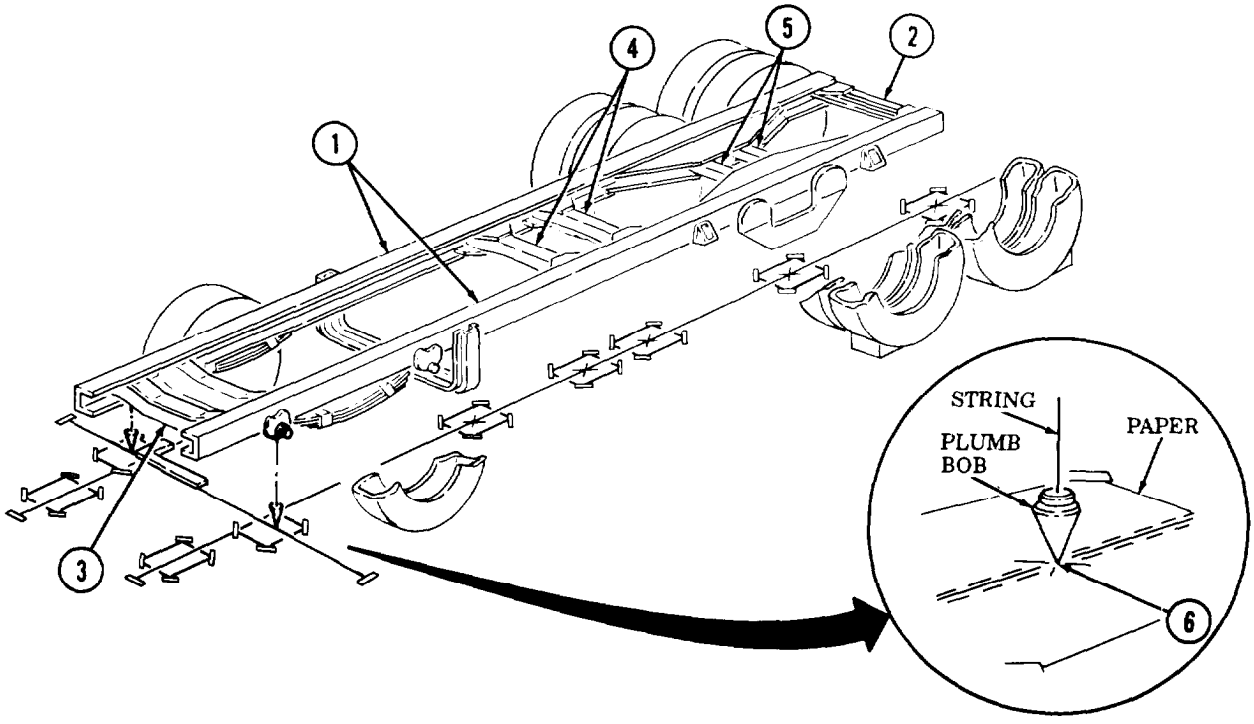

13-6. FRAME ALINEMENT INSPECTION (Contd)

NOTE

Two front-to-rear strings used for horizontal bow measurement will remain in place until task c, frame squareness, is complete.

5. Stretch string tightly on floor between front and rear plumb bob marks (2) under each frame rail (1). Place weights on string to keep taut.

NOTE

For frame rail sections with added fishplate, subtract 0.31 in, (7.9 mm) from plumb bob marks to compensate for fishplate added to frame rail.

6. Measure distance between string and each plumb bob mark (2). If distance is more than 0.5 in. (13 mm), frame rails (1) are out of tolerance.
7. Repeat steps 1 through 6 for rear 20 ft (6 m) of frame rail.

NOTE

If frame rails are verified to be out of tolerance, notify your supervisor. If frame rails are out of tolerance, truck will be classified as unserviceable.

13-6. FRAME ALINEMENT INSPECTION (Contd)

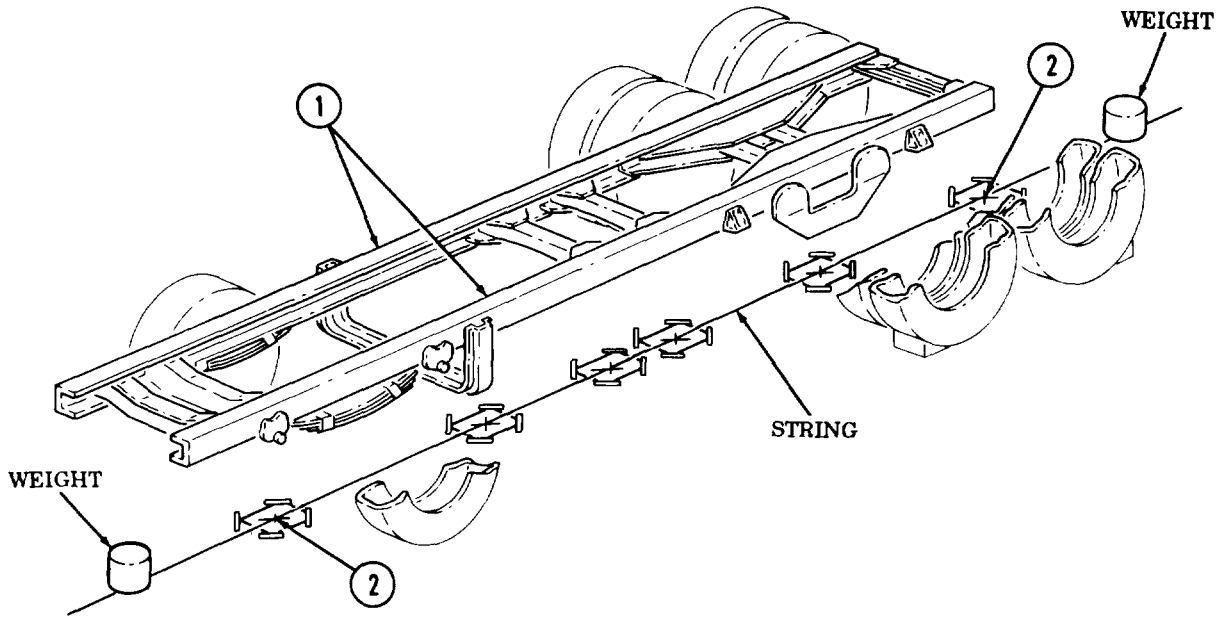

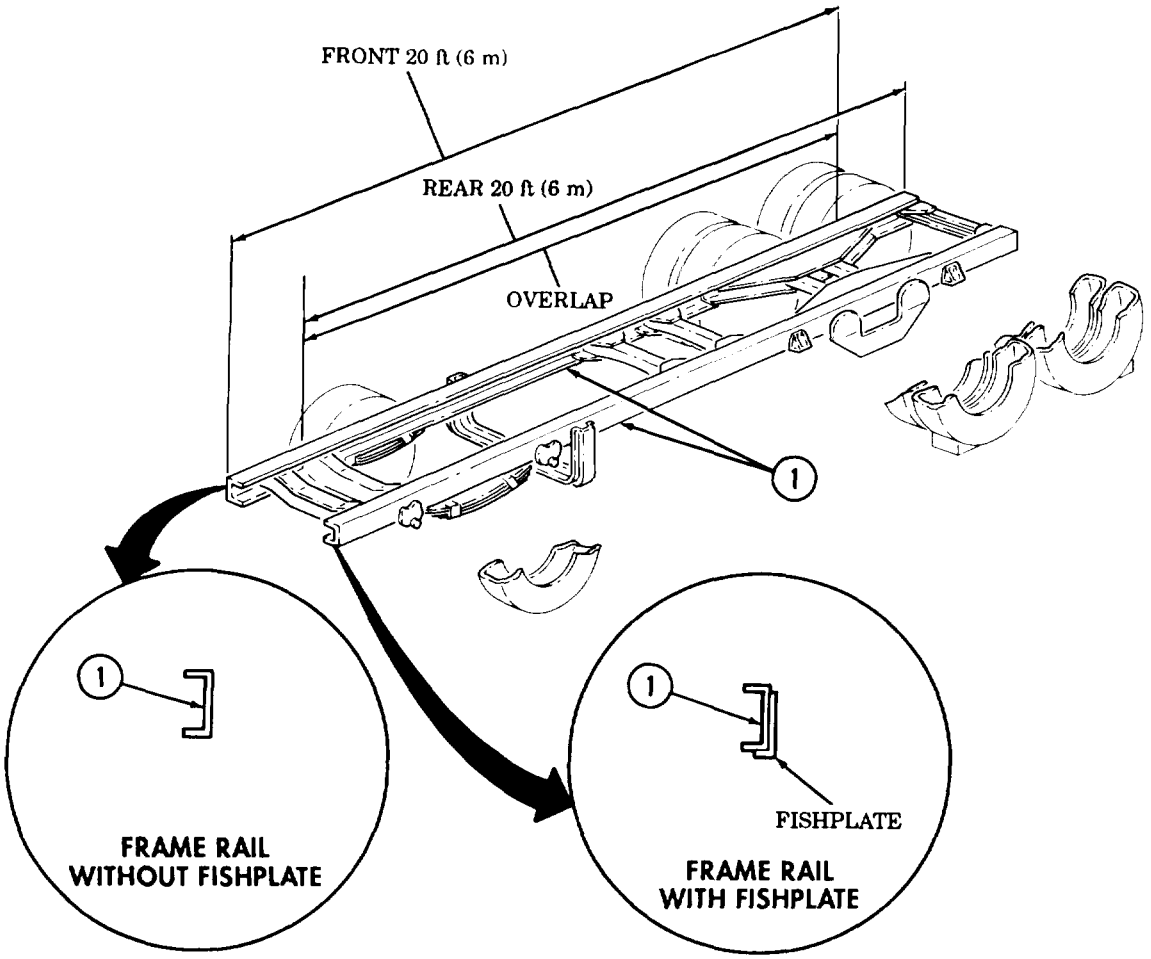

13-6. FRAME ALINEMENT INSPECTION (Contd)

c. Frame Squareness

1. Locate and clean two front grease fittings (3) on right and left front spring shackles **(4).**
2. Tape a 8 x 10.5 in. (20 x 27 cm) sheet of white paper to floor under right and left front spring shackles **(4).**

NOTE

Ensure plumb bob is placed toward front of truck on both right and left grease fittings. If not, inaccurate measurement of frame squareness will result.

3. Place string over grease fitting (3) on left front spring shackle (4) with plumb bob toward front of truck. Lower plumb bob and locate point on paper below spring shackle **(4).**

NOTE

Do not mark paper until plumb bob has stopped swinging and is close to, but not touching paper.

4. Carefully mark spot on paper directly below plumb bob point.
5. Place one edge of square along horizontal line (2) used to measure horizontal bow on right side of truck, and other edge of square touching plumb bob mark.
6. Stretch string along edge of square to right side of truck. Allow string to extend 6 in, (15 cm) beyond right horizontal line (2). Secure or tape string to floor.
7. Repeat steps 3 and 4 for right front spring shackle.
8. Measure distance between right side plumb bob mark and string on floor. If distance is more than 0.25 in. (6 mm), frame rails (1) are out of tolerance.

NOTE

If frame rails are verified to be out of tolerance, notify your supervisor. If frame rails are out of tolerance, truck will be classified as unserviceable.

13-6. FRAME ALINEMENT INSPECTION (Contd)

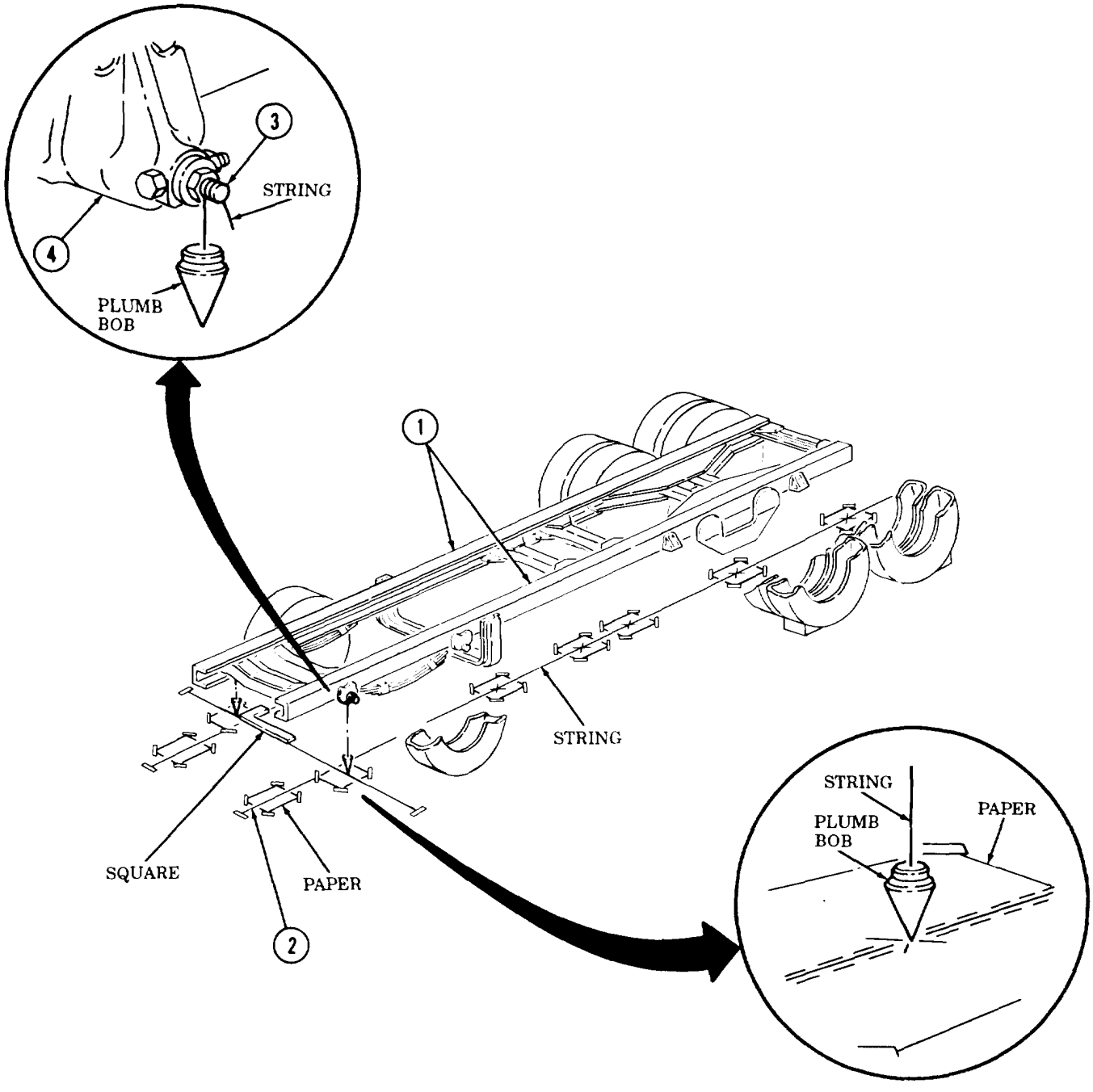

13-6. FRAME ALINEMENT INSPECTION (Contd)

d. Vertical Bow Inspection

NOTE

- For vertical bow inspection, the front 20 ft (6 m) of frame rail (measured from front to rear) and the rear 20 ft (6 m) of frame rail (measured horn rear to front) are measured separately. This will cause an overlap in measurement.
- Perform steps 1 through 3 for front 20 ft (6 m) of frame rails.

1. Stretch string on floor and position weight under bottom and at front of frame rail (2), pull string tight, and position weight at 20 ft (6 m) measurement.
2. Measure distance between string and bottom of frame rail (2) at the closest point to weights. Adjust string height until each measurement is the same and the entire length of string is unobstructed.
3. Measure distance between string and bottom of frame rail (2) near crossmembers (1) and as close to the midway point as possible. If frame rail (2) bows more than 0.125 in. (3 mm) up or down, frame rail **(2)** is out of tolerance.
4. Repeat steps 1 through 3 for rear 20 ft (6 m) of frame rails (2).
5. Remove **wheel chocks** (TM 9-2320-260-10) and release parking brake (TM 9-2320-260-10).

NOTE

If frame rails are verified to be out of tolerance, notify your supervisor. If frame rails are out of tolerance, truck will be classified as unserviceable.

13-6. FRAME ALINEMENT INSECTION (Contd)

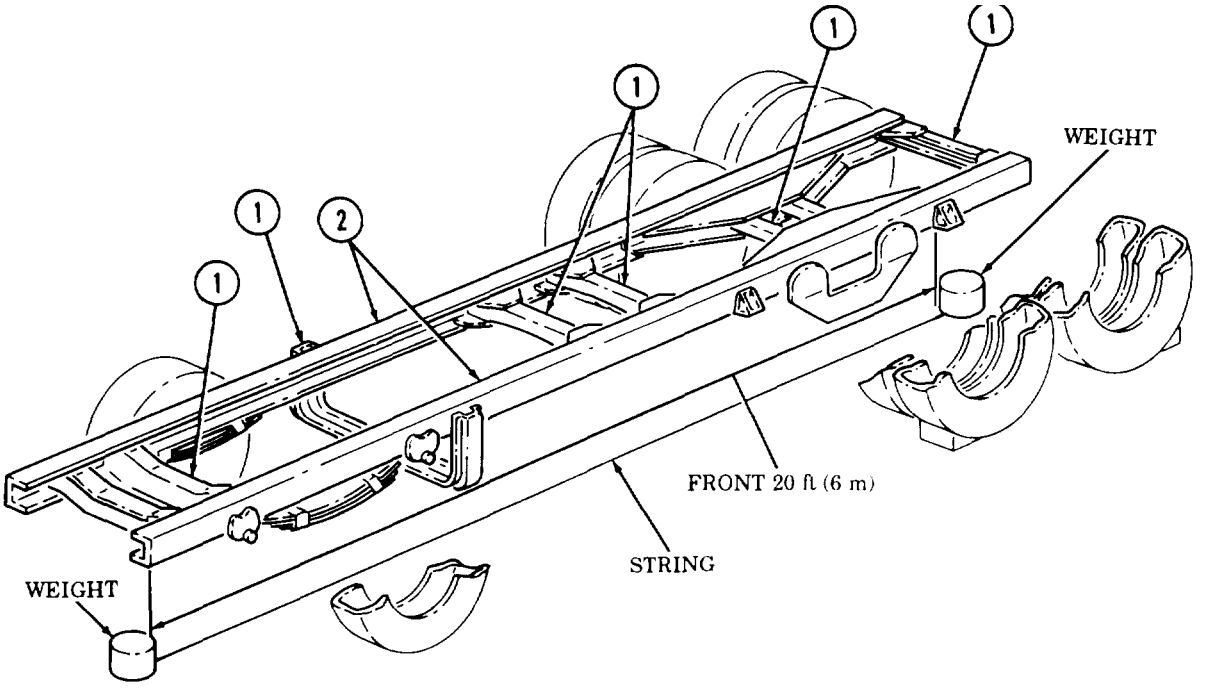

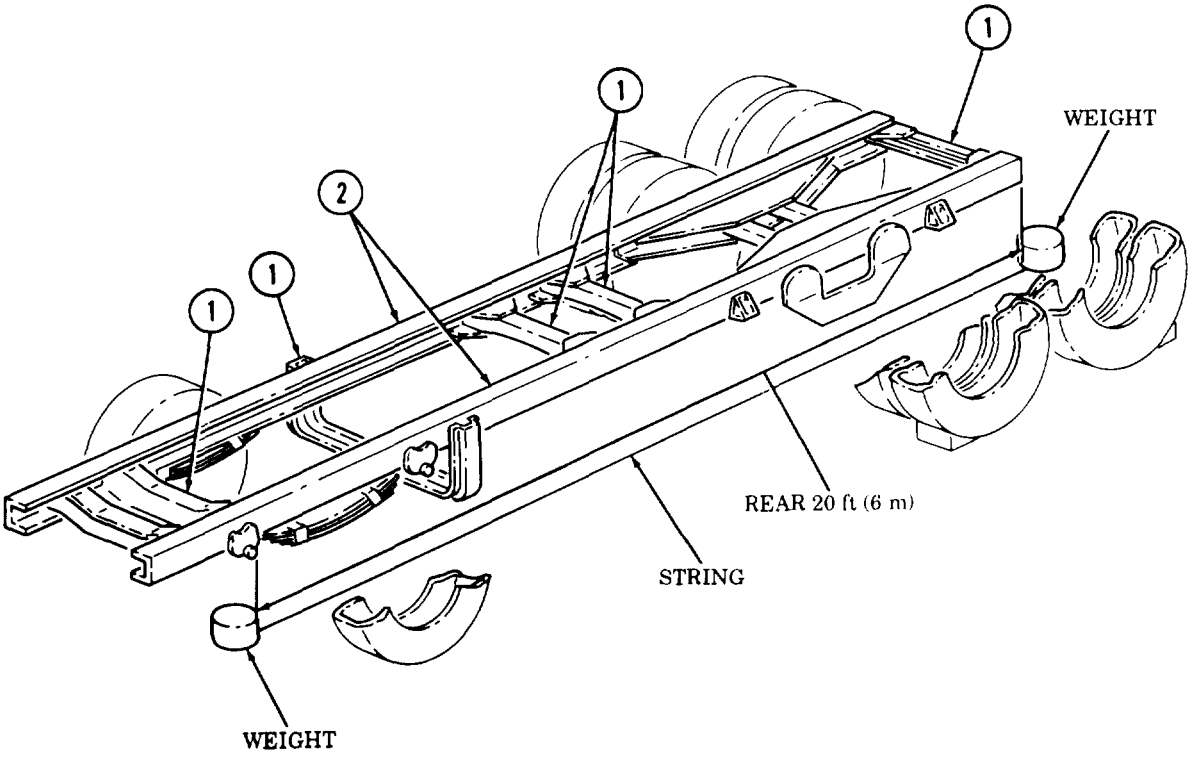

CHAPTER 14

BODY, CAB, AND HOOD MAINTENANCE

14-1. GENERAL INFORMATION

a. The M809, 5-ton vehicles utilize common cab, hood, and fender components. All major body components are composed of steel and are subject to common welding and metal body repair procedures.

b. Refer to TM 9-237 for welding body repair and to TC 3-510 for metal body repair instructions. Refer to TM 43-0139 for preparation of body components for painting instructions. Refer to TB 43-0209 for camouflage painting and military marking instructions.

14-2. BODY, CAB, AND HOOD MAINTENANCE INDEX

PARA. NO.	TITLE	PAGE NO.
14-3.	Cab Replacement	14-1
14-4.	Driver's Seat Base Maintenance	14-2
14-5.	Windshield Glass Replacemen~	14-6

14-3. CAB REPLACEMENT

Refer to cab replacement kit (12300779) for cab removal and replacement instructions.

14-4. DRIVER'S SEAT BASE MAINTENANCE

THIS TASK COVERS:

a. Removal
b. Inspection and Repair
c. Installation

INITIAL SETUP

APPLICABLE MODELS
All

TOOLS
General mechanic's tool kit (Appendix B, Item 1)

MATERIALS/PARTS
Four lockwashers (Appendix D, Item 235)
Eight lockwashers (Appendix D, Item 223)
GAA grease (Appendix C, Item 14)

REFERENCES (TM)
TM 9-2320-260-20
TM 9-2320-260-34P-1

EQUIPMENT CONDITION
- Driver's seat removed (TM 9-2320-260-20).
- Driver's seat cushion, backrest, frame, and seat adjuster removed (TM 9-2320-260-20).

a. Removal

1. **Turn crank (3)** counterclockwise to remove tension on spring (17).
2. Remove two nuts (2), screws (16), and shock absorber (18) from seat base (13) and top frame (l).
3. Remove four nuts (27), lockwashers (24), screws (26), and two brackets (25) from seat base (13). Discard Iockwashers (24).
4. Remove spring (17) from seat base (13) and top frame (1).

NOTE

Tag struts for installation.

5. Remove four nuts (5), lockwashers (6), screws (10), and lower strut (11) from top frame(1) and seat base (13). Discard lockwashers (6).
6. Remove two nuts (9), lockwashers (8), torque rod (7), spring (22), sleeve (23), and spring (22) from top frame (1) and upper strut (19). Discard lockwashers (8).
7. Remove two nuts (15), lockwashers (14), screws (12), and upper strut (19) from seat base (13). Discard lockwashers (14).
8. Remove pin (20) from crank (3).
9. Remove crank (3) and washer (21) from swivel nut (4) and top frame (1).

14-4. DRIVER'S SEAT BASE MAINTENANCE (Contd)

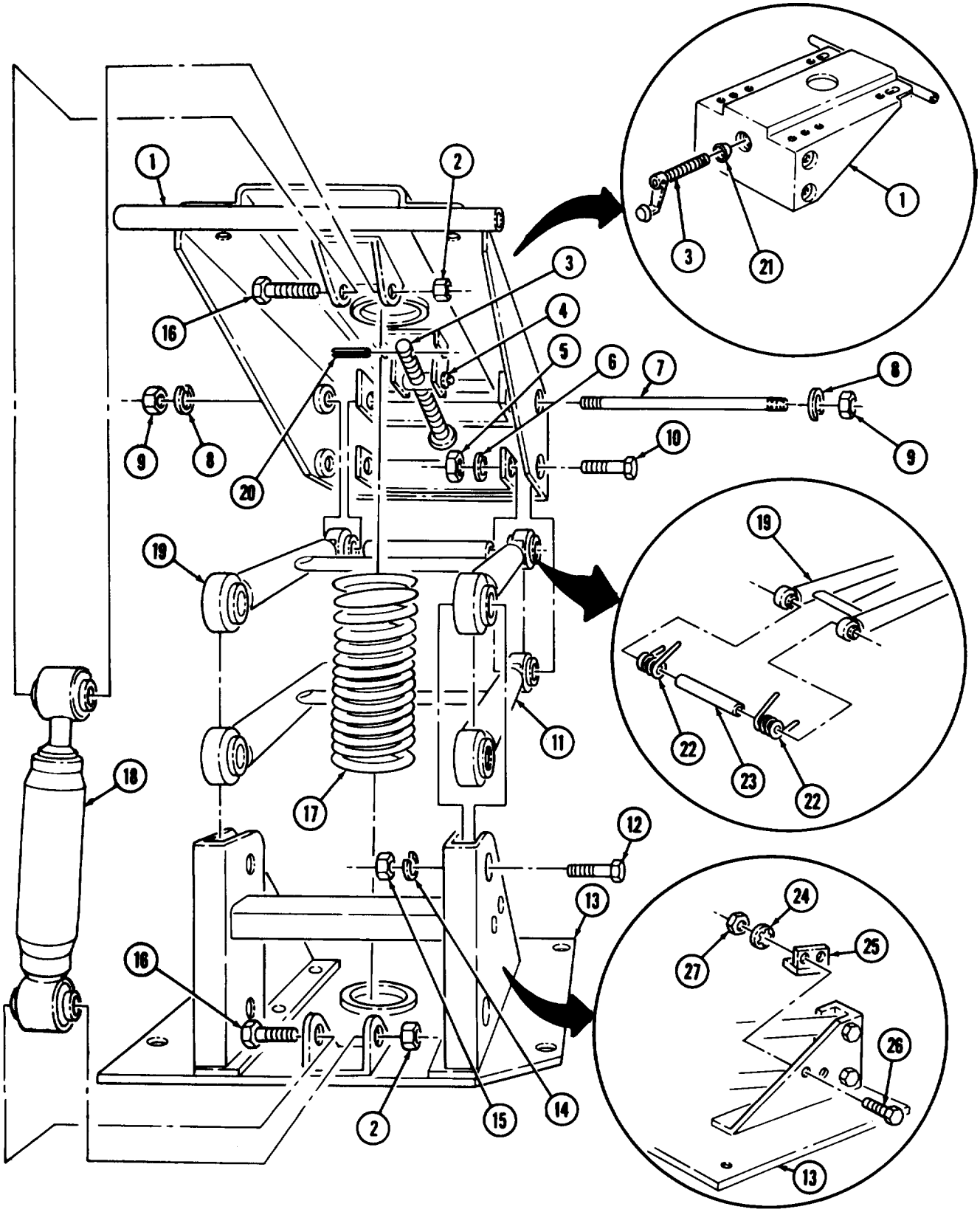

14-4. DRIVER'S SEAT BASE MAINTENANCE (Contd)

b. Inspection and Repair

1. For general inspection instructions, refer to para. 2-9.
2. For general repair instructions, refer to para. 2-10.
3. Inspect seat base (3), top frame (2), upper strut (6), lower strut (7), and sleeve (9) for cracks, bends, and breaks. Replace if cracked, bent, or broken.
4. Inspect torque rod (10), spring (4), crank (1), and springs (8) for cracks, bends, and breaks. Replace if cracked, bent, or broken.
5. Inspect shock absorber (5) for cracks, bends, breaks, and leakage. Replace if cracked, bent, broken, or leaking,

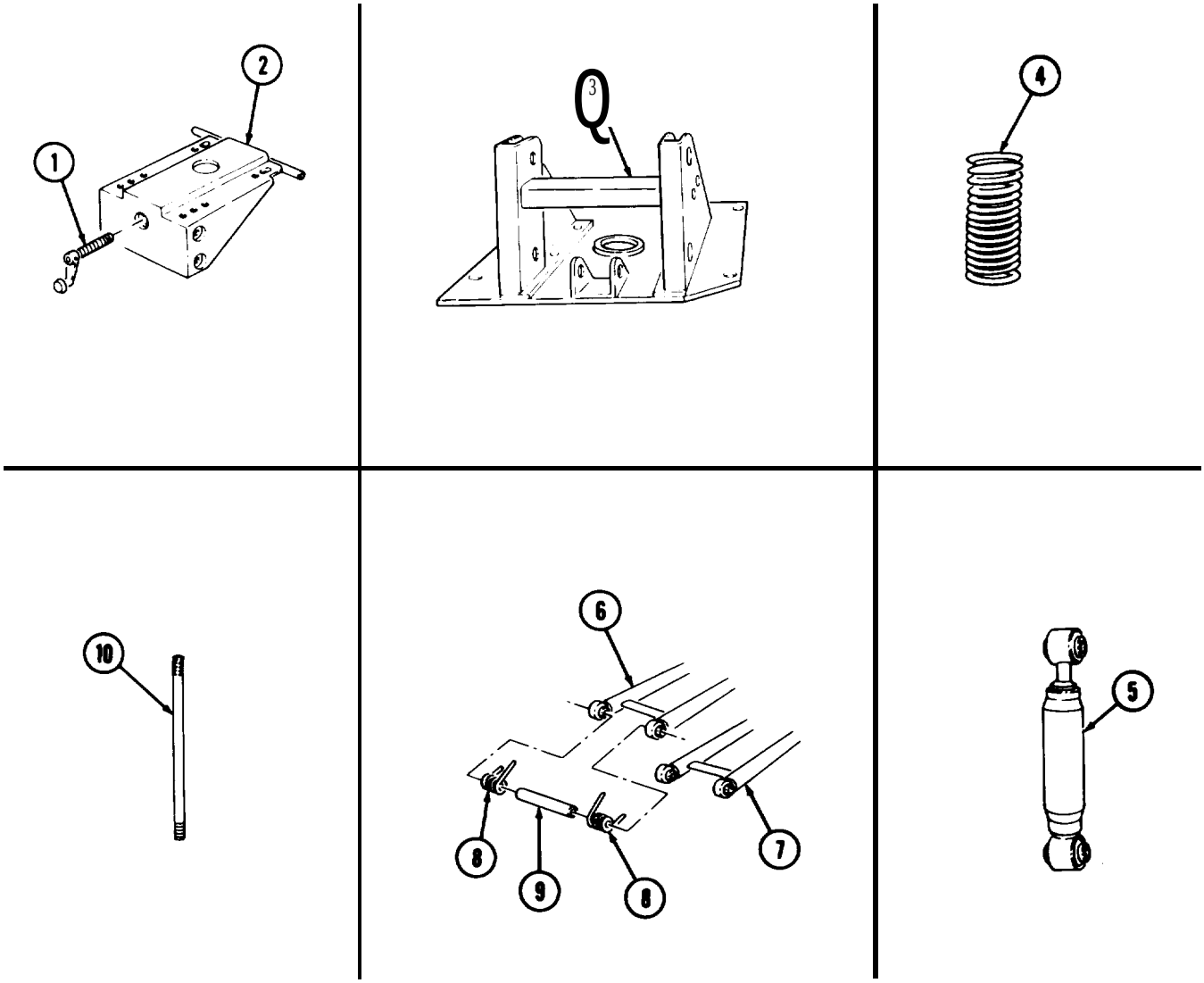

14-4. DRIVER'S SEAT BASE MAINTENANCE (Contd)

c. Installation

1. Install washer (23) and crank (1) in top frame (2) with swivel nut (12).
2. Install pin (22) in crank (1).
3. Apply light coat of GAA grease to threads of crank (1).
4. Install upper strut (6), sleeve (9), and two springs (8) on top frame (2) with torque rod (10), two new lockwashers (15), and nuts (16).
5. Install lower strut (7) on top frame (2) and seat base (3) with four screws (17), new lockwashers (14), and nuts (13).
6, Install upper strut (6) on seat base (3) with two screws (18), new lockwashers (19), and nuts (20).
7. Install spring (4) in seat base (3) and top frame (2).
8. Install two brackets (26) on seat base (3) with four screws (27), new lockwashers (25), and nuts (24).
9. Install shock absorber (5) on top frame (2) and seat base (3) with two screws (21) and nuts (11).

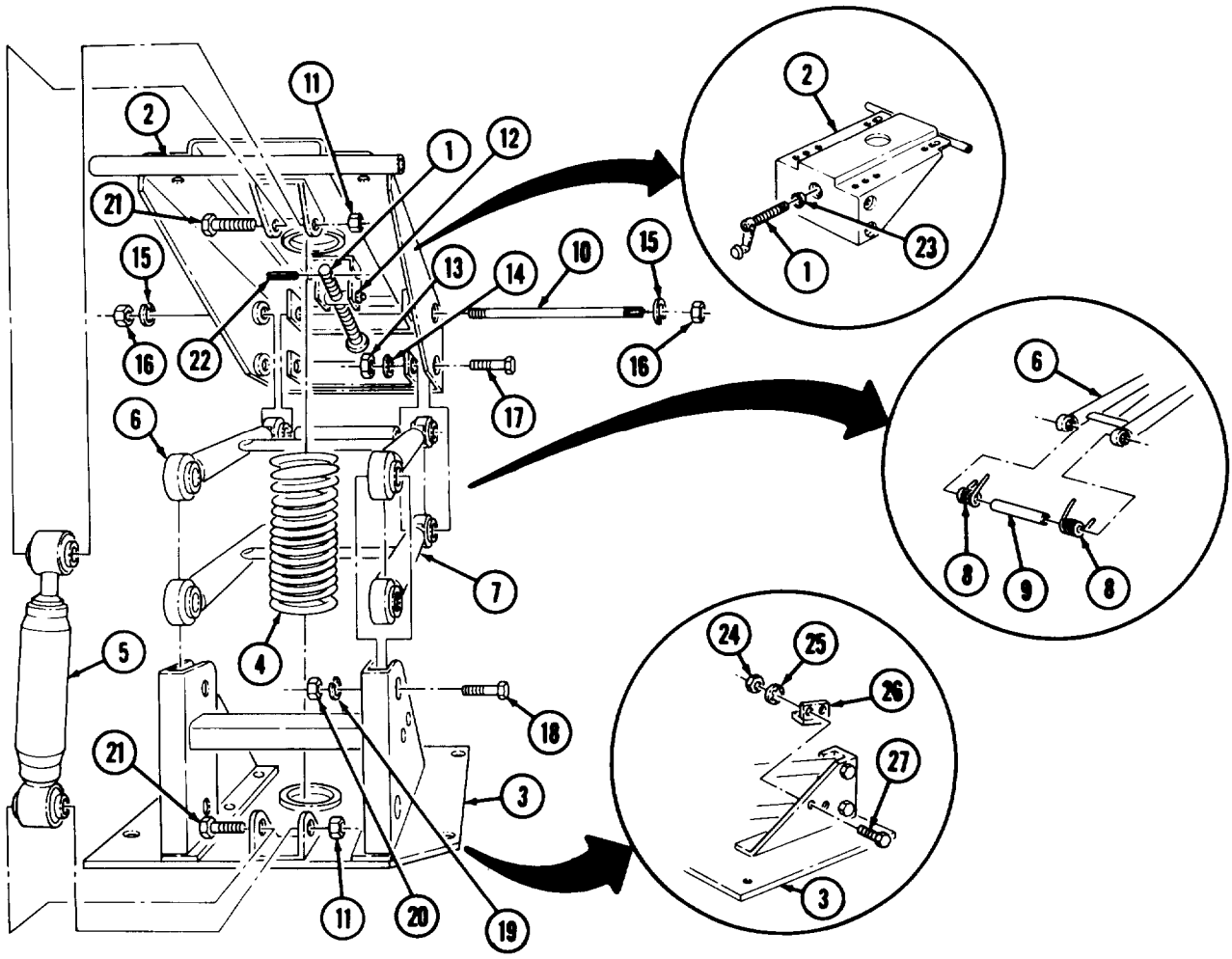

FOLLOW-ON TASKS: • Install driver's seat cushion, backrest, frame, and seat adjuster (TM 9-2320-260-20).
• Install driver's seat (TM 9-2320-260-20).

14-5. WINDSHIELD GLASS REPLACEMENT

THIS TASK COVERS:

a. Removal **b. Installation**

INITIAL SETUP

APPLICABLE MODELS
All

TOOLS
General mechanic's tool kit (Appendix B, Item 1)
Soft-head hammer (Appendix B, Item **47)**

MATERIALS/PARTS
Four lockwashers (Appendix D, Item 244)
Two lockwashers (Appendix D, Item 249)

MATERIALS/PARTS (Contd)
Rubber strip (Appendix D, Item 371)
Adhesive (Appendix C, Item 3)

REFERENCES (TM)
TM 9-2320-260-20
TM 9-2320-260-34P-1

EQUIPMENT CONDITION
ŽWindshield assembly removed (TM 9-2320-260-20).
• Windshield arm, glass, and handle removed (TM 9-2320-260-20).

a. Removal

1. Remove four screws (2) and lockwashers (1) from windshield frame (10). Discard lockwashers (l).
2. Remove two nuts (5), lockwashers (4), screws (3), and crosspiece (6) from windshield frame (10). Discard lockwashers (4).

NOTE
Measure old rubber strip for installation.

3. Remove rubber strip (7) from crosspiece (6). Discard rubber strip (7).
4. Remove windshield glass (8) and rubber strips (9) from windshield frame (10). Discard rubber strips (9).

b. Installation

NOTE
Cut four new rubber strips to size.

1. Apply adhesive to three new rubber strips (9) and install on windshield glass (8).
2. Install windshield glass (8) in windshield frame (10). Tap windshield glass (8) gently into position.
3. Apply adhesive to new rubber strip (7) and install on windshield glass (8).
4. Position crosspiece (6) on windshield frame (10) and gently tap until screw holes aline.
5. Install two screws (3), new lockwashers (4), nuts (5), four new lockwashers (1) and screws (2) on windshield frame (10) and crosspiece (6).
6. Trim excess rubber strip (7) and (9) and adhesive from around windshield glass (8).

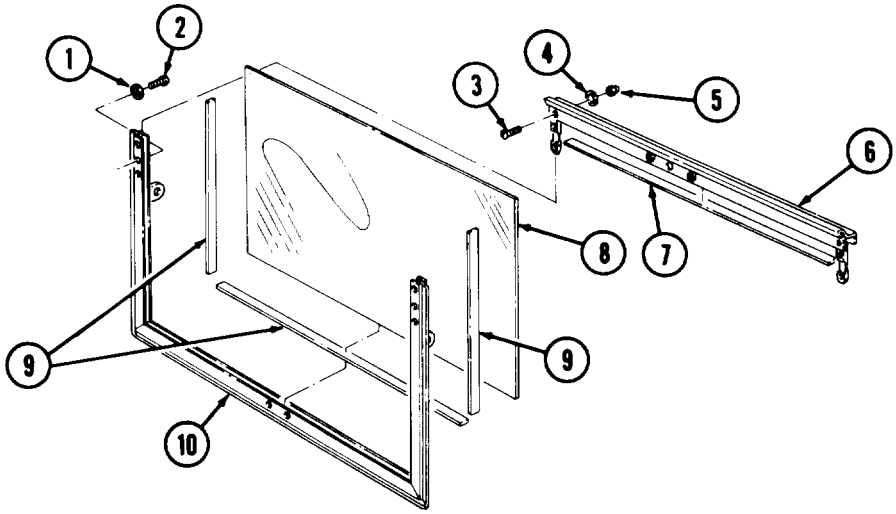

FOLLOW-ON TASKS: Ž Install windshield arm, glass, and handle (TM 9-2320-260-20).
• Install windshield assembly (TM 9-2320-260-20).

CHAPTER 15
SPECIAL PURPOSE BODIES MAINTENANCE

Section I. Cargo Body Maintenance (page 15-1)
Section II. Wrecker Body Maintenance (page 15-8)
Section III. Tractor Wrecker Body Maintenance (page 15-13)
Section IV. Dump Body Maintenance (page 15-24)
Section V. Van Body Maintenance (page 15-78)
Section VI. Van Body Electrical Components Maintenance (page 15-245)

Section 1. CARGO BODY MAINTENANCE

15-1. CARGO BODY MAINTENANCE INDEX

PARA. NO.	TITLE	PAGE NO.
15-2.	Cargo Body Replacement	15-1
15-3.	Cargo Body Frame Rail Sill Replacement	15-6

15-2. CARGO BODY REPLACEMENT

THIS TASK COVERS:

a. Removal
b. Instillation

INITIAL SETUP

APPLICABLE MODELS
M813, M813A1, M814

TOOLS
General mechanic's tool kit (Appendix B, Item 1)
Torque wrench, 3/8-in. dr. (Appendix B, item 4)
Lifting device
Two chains
Two guide lines

MATERIALS/PARTS
Twelve locknuts (M814) (Appendix D, Item 173)
Four locknuts (M813, M813A1) (Appendix D, Item 184)
Four locknuts (Appendix D, Item 168)
Four locknuts (M813, M813A1) (Appendix D, Item 182)

PERSONNEL REQUIRED
Three

REFERENCES (TM)
TM 9-2320-260-20
TM 9-2320-260-34P-1

EQUIPMENT CONDITION
- Upper and lower splash guards removed (TM 9-2320-260-20).
- Troop seat and side racks removed (TM 9-2320-260-10).
- Spare tire carrier removed (TM 9-2320-260-20).
- Pioneer tool kit mounting bracket removed (TM 9-2320-260-20).
- Reflectors removed (TM 9-2320-260-20).
- Remove cargo body tailgate (TM 9-2320-260-20).
- Remove cargo body dropsides (M813A1) (TM 9-2320-260-20).

GENERAL SAFETY INSTRUCTIONS
- All personnel must stand clear during lifting operations.
- Ensure lifting capacity is greater than weight of cargo body.

15-2. CARGO BODY REPLACEMENT (Contd)

a. Removal

NOTE

Step 1 describes one side only. Perform step 1 for both sides of cargo body.

1. Disconnect four wires (4) from wiring harness (5) and remove two screws (6), clips (2), and locknuts (1) from cargo body (3). Discard locknuts (l).
2. Attach chains around cargo body (3).

WARNING

- All personnel must stand clear during lifting operations. A swinging or shifting load may cause injury to personnel.
- Ensure lifting capacity is greater than weight (1,800 lb (817 kg)) of cargo body, Failure to do so may result in injury to personnel or damage to equipment.

3. Attach chains to lifting device and remove slack from chains.
4. Attach two guide lines to cargo body (3).
5. Remove four locknuts (11), washers (12), springs (13), springs (14), washers (12), and screws (8) from two brackets (9) and brackets (10). Discard locknuts (11).

NOTE

- Perform step 6 for M814 vehicles.

Ž Perform step 7 for M813 and M813A1 vehicles.

6. Remove twelve locknuts (22) and screws (19) from six brackets (20) and (21). Discard locknuts (22),
7. Remove four locknuts (18) and screws (15) from four brackets (16) and (17). Discard locknuts (18).

NOTE

Two assistants will help with step 8.

8. Raise cargo body (3) away from frame (7) and lower on supports.
9. Remove lifting device from two chains.
10. Remove two chains and guide lines from cargo body (3).

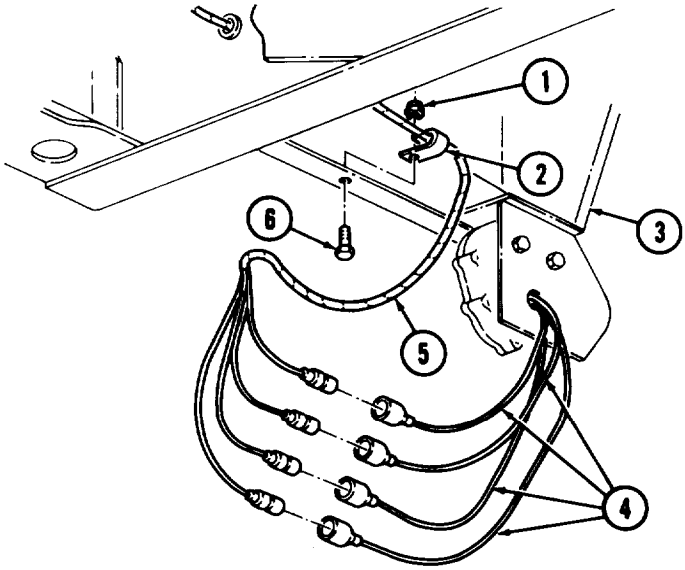

15-2. CARGO BODY REPLACEMENT (Contd)

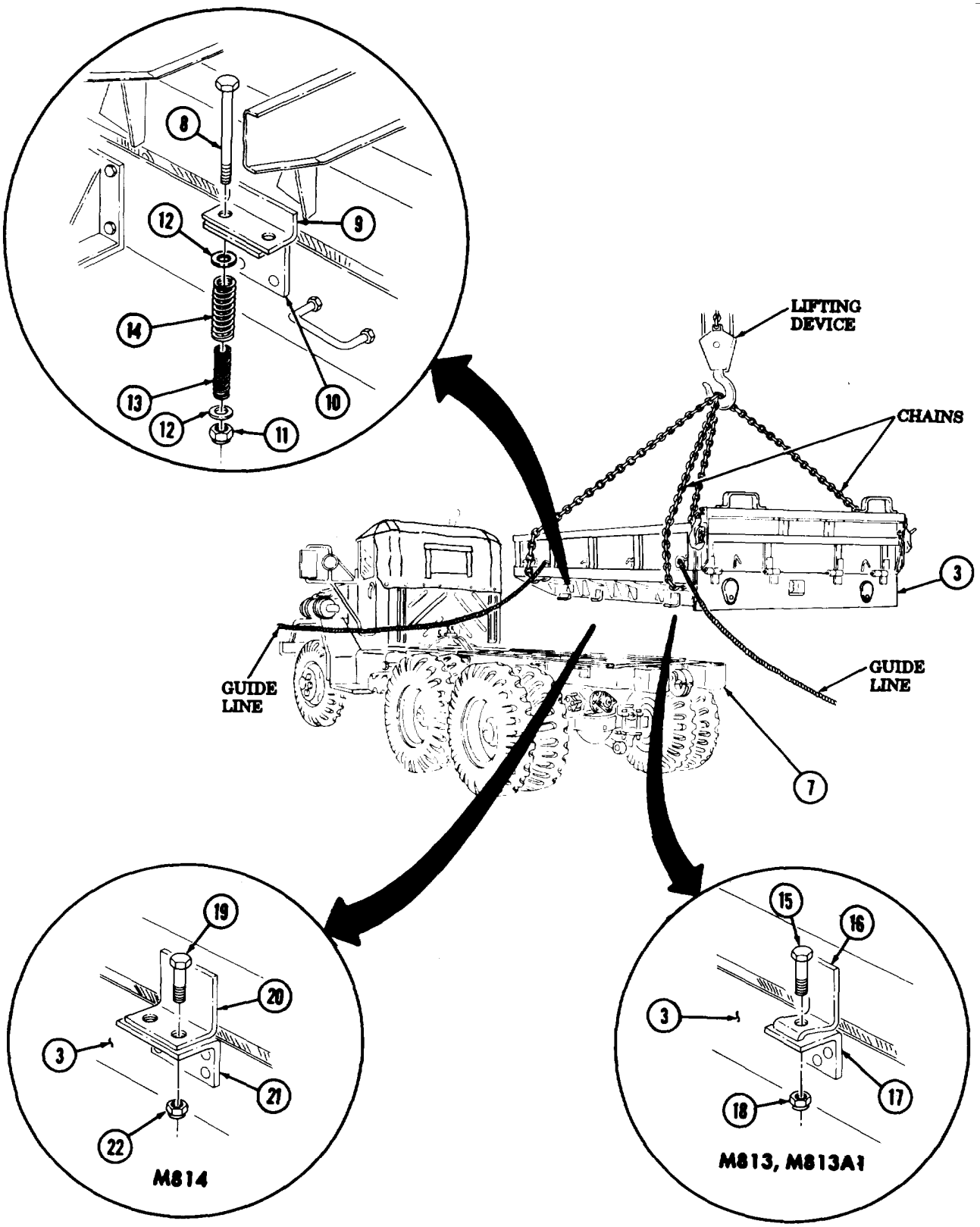

15-2. CARGO BODY REPLACEMENT (Contd)

b. Installation

1. Install two guide lines and chains to cargo body (1).
2. Install lifting device to two chains.

WARNING

- All personnel must stand clear during lifting operations. A swinging or shifiing load may cause injury to personnel.
- Ensure lifting capacity is greater than weight (1,800 lb (817 kg)) of cargo body. Failure to do so may result in injury to personnel or damage to equipment.

NOTE

- Use breaker bar to aline body and frame brackets.
- Two assistants will help with step 3.

3. Raise cargo body (1) away from supports and position on frame (2).
4. Install four screws (3), washers (7), springs (8), springs (9), washers (7), and new locknuts (6) on two brackets (4) and brackets (5).
5. Tighten locknuts (6) to set springs (8) and (9) height to 6.375 in. (16.19 cm).

NOTE

- Perform step 6 for M813 and M813A1 vehicles.
- Perform step 7 for M814 vehicles.

6. Install four screws (15) and new locknuts (18) on four brackets (16) and (17). Tighten locknut (18) 40-50 lb-ft (54-68 N•m).
7. Install twelve screws (19) and new locknuts (22) on six brackets (20) and (21). Tighten locknuts (227) 40-50 lb-ft (54-68 N•m).
8. Remove lifting device from two chains.
9. Remove two guide lines and chains from cargo body (1).

NOTE

Steps 10 and 11 describe one side only. Perform steps 10 and 11 for both sides of cargo body.

10. Install two clips (11) on cargo body (1) with two screws (14) and new locknuts (10).
11. Connect wiring harness (13) to four wires (12).

15-2. CARGO BODY REPLACEMENT (Contd)

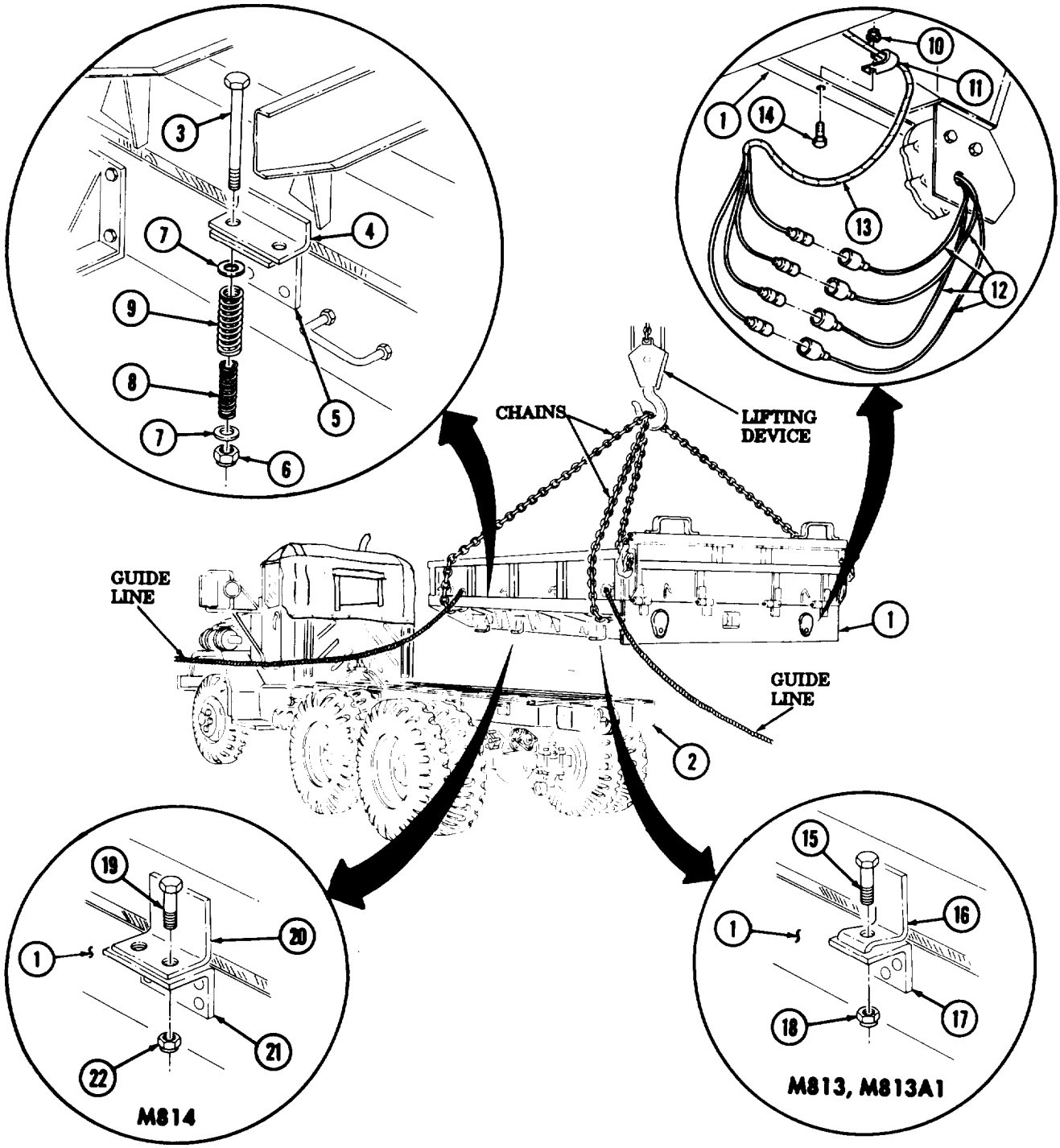

FOLLOW-ON TASKS: Ž Install pioneer tool kit mounting bracket (TM 9-2320-260-20).
- Install spare tire carrier (TM 9-2320-260-20).
- Install troop seat and side racks. (TM 9-2320-260-10).
- Install upper and lower splash guards (TM 9-2320-260-20).

Ž Install cargo body dropsides (M813A1) (TM 9-2320-260-20).
- Install cargo body tailgate (TM 9-2320-260-20).
- Install reflectors (TM 9-2320-260-20).

15-3. CARGO BODY FRAME RAIL SILL REPLACEMENT

THIS TASK COVERS:

a. Removal **b. Installation**

INITIAL SETUP

APPLICABLE MODELS
M813, M813A1, M814

TOOLS
General mechanic's tool kit (Appendix B, Item 1)
Torque wrench, 3/8-in. dr. (Appendix B, Item 4)

MATERIALS/PARTS
Five Lockwashers (M813, M813A1) (Appendix D, Item 215)
Ten lockwashers (M814) (Appendix D, Item 215)
Ten locknuts (M814) (Appendix D, Item 176)

REFERENCES (TM)
TM 9-2320-260-34P-1

EQUIPMENT CONDITION
Cargo body removed (para. 15-2).

a. Removal

NOTE

- Left and right frame rail sills are replaced the same. This procedure covers the left frame rail sill.
- Perform steps 1 and 2 for M813 and M813A1 vehicles.
- Perform steps 3 and 4 for M814 vehicles.

1. Remove five nuts (7), lockwashers (9), and sill (3) from cargo body (1). Discard lockwashers (9).
2. Remove five screws (8) from sill (3).
3. Remove ten locknuts (2), washers (6), lockwashers (5), and two sills (3) from cargo body (1). Discard lockwashers (5) and locknuts (2).
4. Remove ten screws (4) from sills (3).

b. Installation

NOTE

- Perform steps 1 and 2 for M813 and M813A1 vehicles.
- Perform steps 3 and 4 for M814 vehicles.

1. Position sill (3) on cargo body (1) with five screws (8).
2. Install sill (3) on cargo body (1) with five new lockwashers (9) and nuts (7). Tighten nuts (7) 100-110 lb-in. (11.3-12.4 N.m).
3. Position sill (3) on cargo body (1) with ten screws (4).
4. Install sills (3) on cargo body (1) with ten new lockwashers (5), washers (6), and new locknuts (2). Tighten locknuts (2) 100-110 lb-in. (11.3 -12.4 N.m).

15-3. CARGO BODY FRAME RAIL SILL REPLACEMENT (Contd)

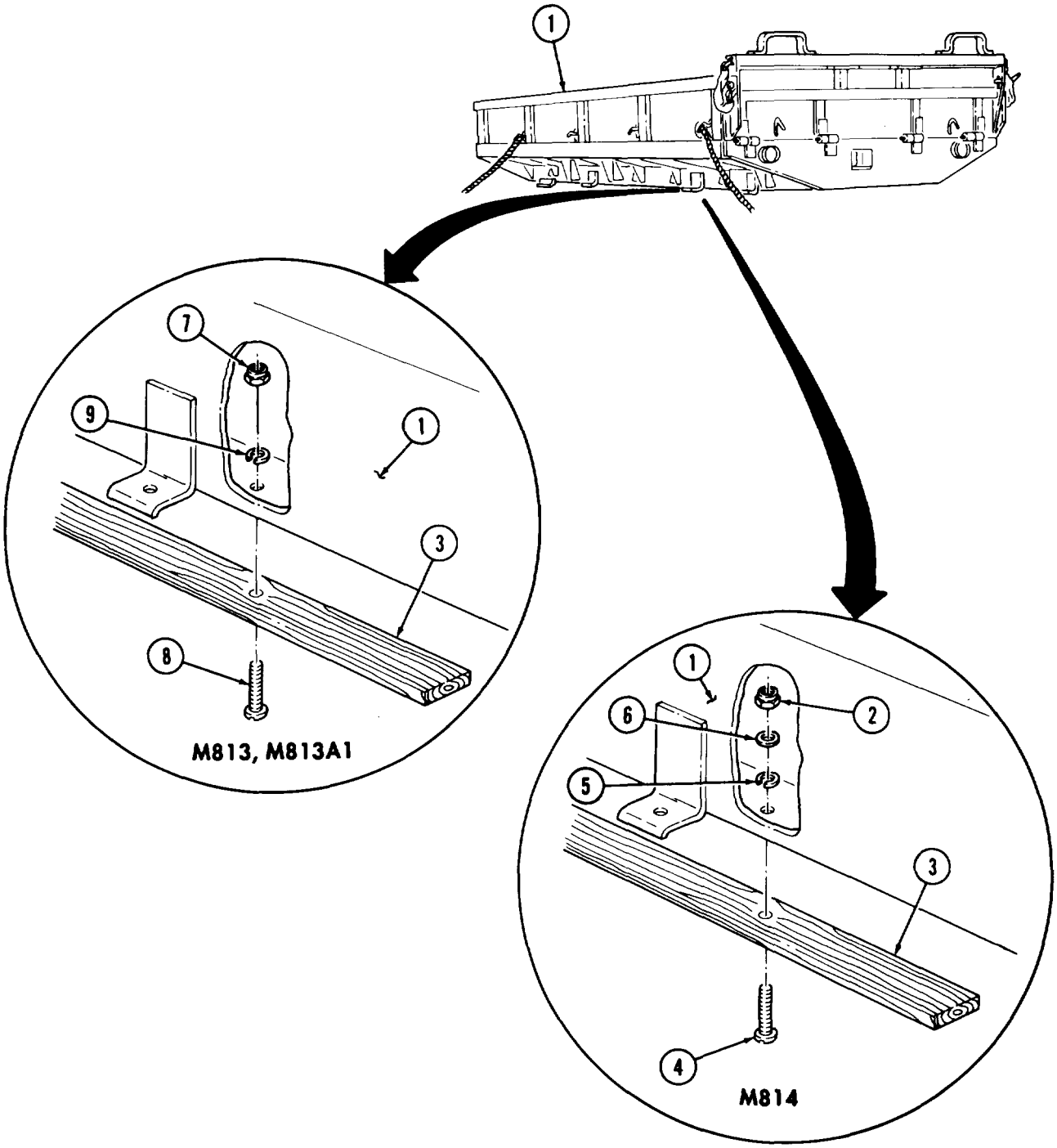

FOLLOW-ON TASK: Install cargo body (para. 15-2).

Section II. WRECKER BODY MAINTENANCE

15-4. WRECKER BODY MAINTENANCE INDEX

PARA. NO.	TITLE	PAGE NO.
15-5.	Wrecker Body Replacement	15-8
15-6.	Rear Winch Rollers Repair	15-12

15-5. WRECKER BODY REPLACEMENT

THIS TASK COVERS:

a. Removal b. Installation

INITIAL SETUP

APPLICABLE MODELS
M816

TOOLS
General mechanic's tool kit (Appendix B, Item 1)
Lifting device
Two chains
Two guide lines

MATERIALS/PARTS
Sixteen locknuts (Appendix D, Item 186)
Eighteen locknuts (Appendix D, Item 183)
Eight locknuts (Appendix D, Item 169)

REFERENCES (TM)
TM 9-2320-260-34P-2

EQUIPMENT CONDITION
Crane turntable removed (para. 16-26).

GENERAL SAFETY INSTRUCTIONS
- All personnel must stand clear during lifting operations.
- Ensure lifting capacity is greater than weight of wrecker body.

a. Removal

NOTE

The left and right side body mounts are replaced the same. The art shows the left side body mount.

1. Remove four locknuts (12), two U-bolts (14), and two woodblocks (13) from frame rail (2) and wrecker body (l). Discard locknuts (12).
2. Remove four locknuts (15) and two U-bolts (16) from frame rail (2) and wrecker body (l). Discard locknuts (15).
3. Remove four locknuts (17), two U-bolts (19), and four woodblocks (18) from frame rail (2) and wrecker body (1). Discard locknuts (17).
4. Remove four locknuts (3), four mounting bolts (6), two plates (5), and four woodblocks (4) from frame rail (2) and wrecker body (l). Discard locknuts (3).
5. Remove ten locknuts (10), screws (8), sixteen locknuts (9), screws (11), and two brackets (7) from frame rail (2), Discard locknuts (10) and (9).

15-5. WRECKER BODY REPLACEMENT (Contd)

WARNING

- All personnel must stand clear during lifting operations. A swinging or shifting load may cause injury or death to personnel.
- Ensure lifting capacity is greater than weight (1,800 lb (817 kg)) of wrecker body. Failure to do so may result in injury to personnel or damage to equipment.

6. Attach two guide lines to wrecker body (1).
7. Attach two chains to wrecker body (1).
8. Attach lifting device to two chains.

NOTE

Two assistants will help with steps 9 and 10.

9. Remove wrecker body (1) from frame rail (2) and lower onto supports.
10. Remove lifting device, two chains, and guide lines from wrecker body (1).

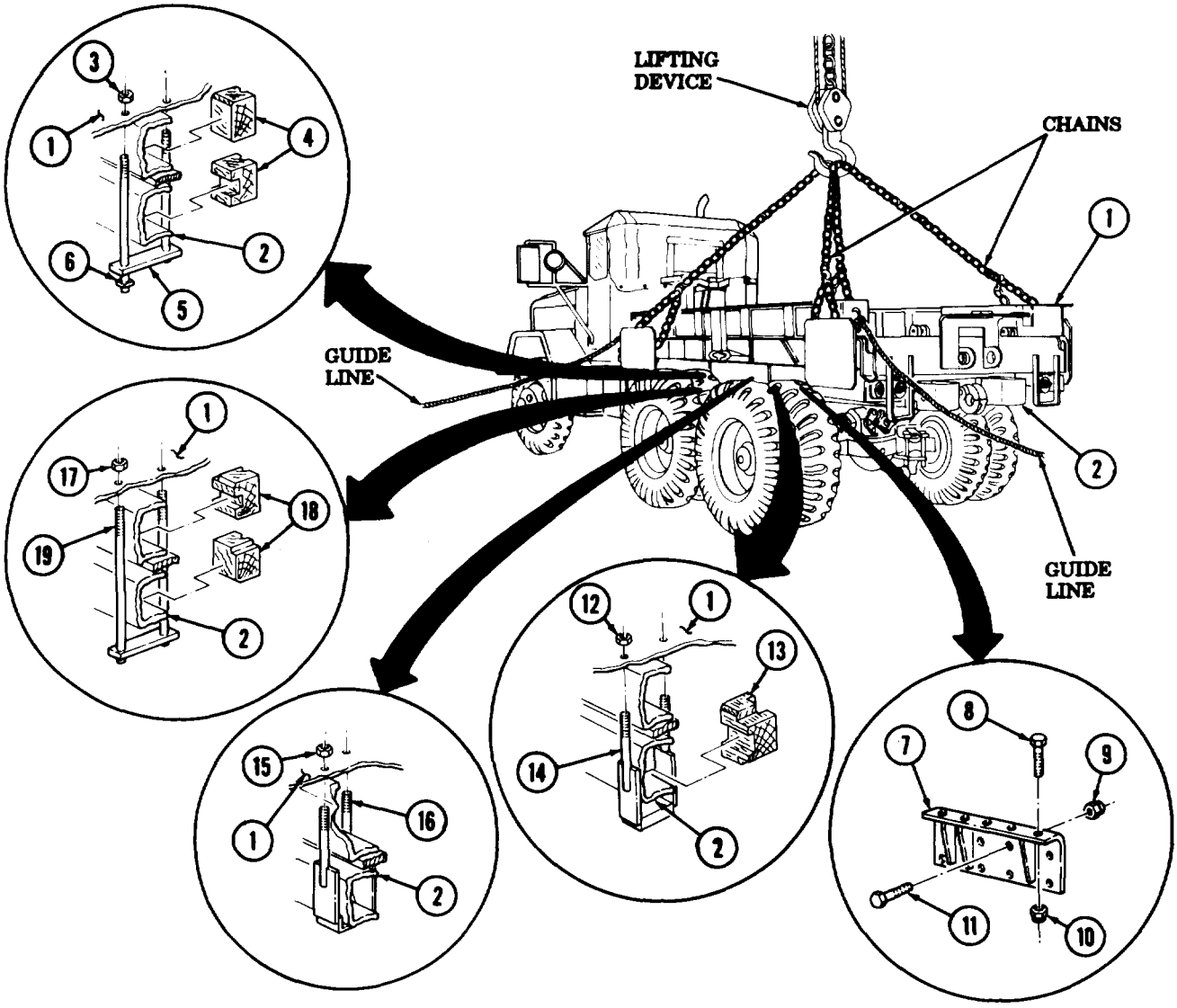

15-5. WRECKER BODY REPLACEMENT (Contd)

b. Installation

WARNING

- All personnel must stand clear during lifting operations. A swinging or shifting load may cause injury or death to personnel.
- Ensure lifting capacity is greater than weight (1,800 lb (817 kg)) of wrecker body. Failure to do so may result in injury to personnel or damage to equipment.

NOTE

Two assistants will help with steps 1 through 3.

1. Attach two guide lines to wrecker body (1).
2. Attach two chains to wrecker body (1).
3. Attach lifting device to two chains.
4. Raise wrecker body (1) from supports and position on frame rail (2). Ensure mounting holes of frame rail (2) and wrecker body (1) are alined.
5. Install two woodblocks (13) and two U-bolts (14) on frame rail (2) and wrecker body (1) with four new locknuts (12).
6. Install two U-bolts (16) on frame rail (2) and wrecker body (1) with four new locknuts (15).
7. Install four woodblocks (18) and two U-bolts (19) on frame rail (2) and wrecker body (1) with four new locknuts (17).
8. Install two plates (5) and four woodblocks (4) on frame rail (2) and wrecker body (1) with four mounting bolts (6) and four new locknuts (3).
9. Install two brackets (7) on frame rail (2) with sixteen screws (11), new locknuts (9), ten screws (8), and new locknuts (10).

NOTE

Two assistants will help with step 10.

10. Remove lifting device, two chains, and guide lines from wrecker body (1).

15-5. WRECKER BODY REPLACEMENT (Contd)

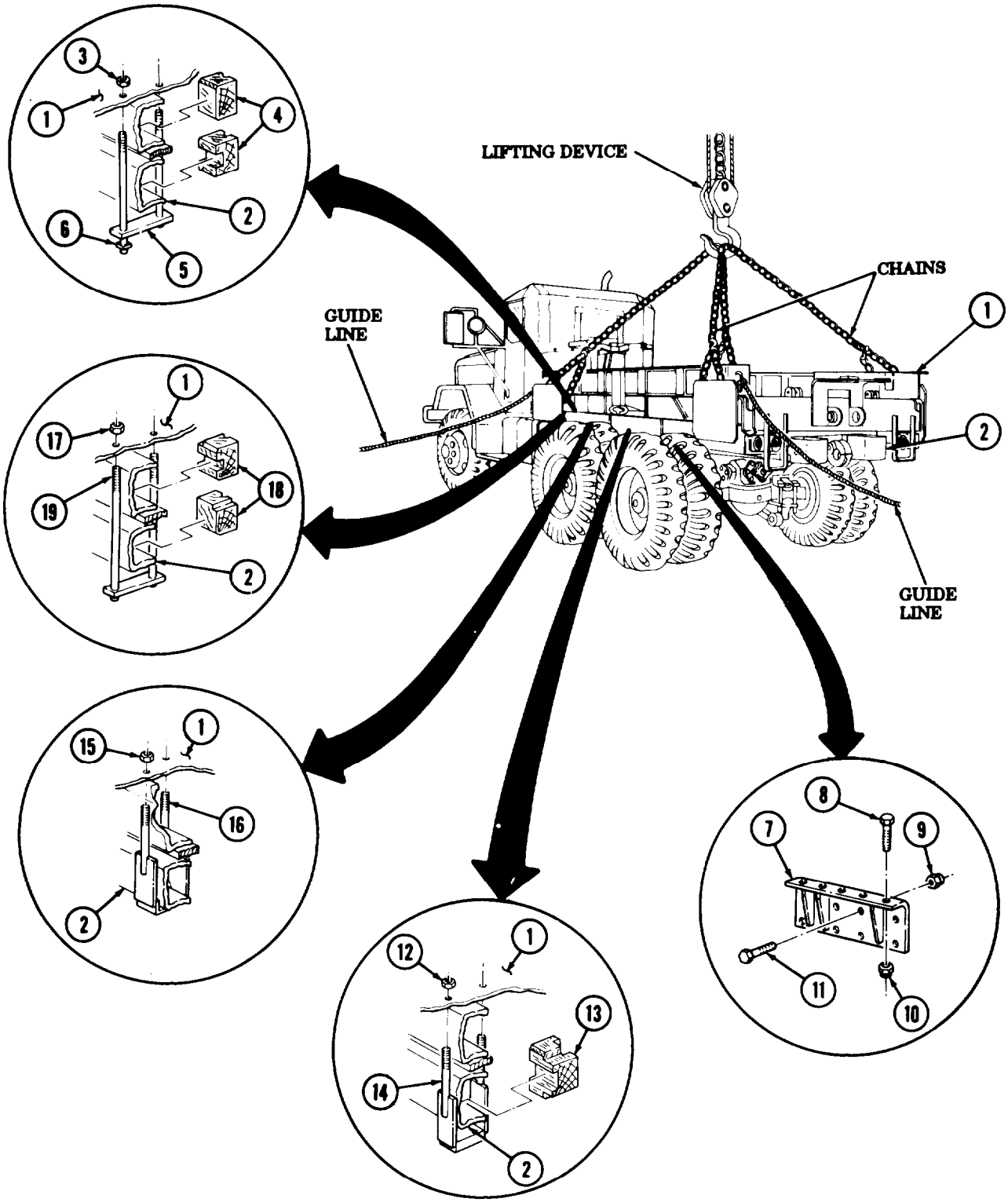

FOLLOW-ON TASK: Install crane turntable (para. 16-25).

15-6. REAR WINCH ROLLERS REPAIR

THIS TASK COVERS:

Repair

INITIAL SETUP

APPLICABLE MODELS

M816

TOOLS

General mechanic's tool kit (Appendix B, Item 1)
Mechanical puller kit (Appendix B, Item 14)
Arbor press (Appendix B, Item 7)

MATERIALS/PARTS

Two bearings (Appendix D, Item 2)

REFERENCES (TM]

TM 9-2320-260-20
TM 9-2320-260-34P-2

EQUIPMENT CONDITION

Rear winch roller removed (TM 9-2320-260-20).

Repair

1. Using mechanical puller, remove two bearings (1) from rear winch roller (2). Discard bearings (1).
2. Using arbor press, install two new bearings (1) in rear winch roller (2).

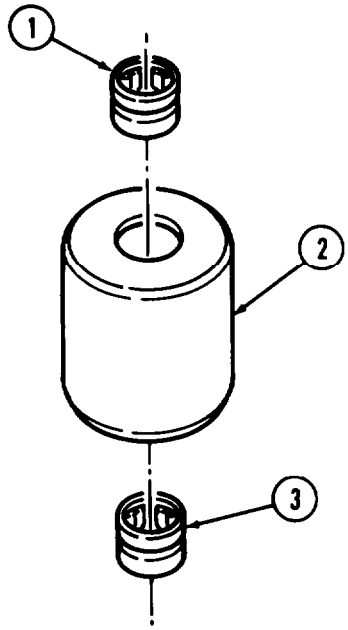

FOLLOW-ON TASK: Install rear winch roller (TM 9-2320-260-20).

Section III. TRACTOR WRECKER BODY MAINTENANCE

15-7. TRACTOR WRECKER BODY MAINTENANCE INDEX

PARA. NO.	TITLE	PAGE NO.
15-8.	Tractor Wrecker Body Replacement	15-13
15-9.	Rear Fenders Replacement	15-18
15-10.	Hydraulic Hose and Tube Replacement	15-20

15-8. TRACTOR WRECKER BODY REPLACEMENT

THIS **TASK COVERS:**

a. Removal **b. Installation**

INITIAL SETUP

APPLICABLE MODELS
M819

TOOLS
General mechanic's tool kit (Appendix B, Item 1)
l-1/2-in. socket, 3/4-in. dr. (Appendix B, Item 118)
Supports
Lifting device
Two chains

MATERIALS/PARTS
Sixteen locknuts (Appendix D, Item 167)
Four locknuts (Appendix D, Item 202)
GAA grease (Appendix C, Item 14)

PERSONNEL REQUIRED
Two

REFERENCES (TM)
LO 9-2320-260-12
TM 9-2320-260-10
TM 9-2320-260-20
TM 9-2320-260-34P-2

EQUIPMENT CONDITION
- Oil reservoir drained (LO 9-2320-260-12).
- Front splash guards removed (TM 9-2320-260-20).
- Fifth wheel removed (TM 9-2320-260-20).
- Crane shipper, boom, and boom extension removed (para. 16-33).
- Boom lift cylinder removed (para. 16-32).
- Boom swing mechanism removed (para. 16-29).
- Hydraulic swivel valve removed (para. 16-31).

GENERAL SAFETY INSTRUCTIONS
- All personnel must stand clear during lifting operations.
- Ensure lifting capacity is greater than weight of tractor wrecker body.

15-8. TRACTOR WRECKER BODY REPLACEMENT (Contd)

a. Removal

1. Remove sixteen locknuts (14) from eight U-bolts (6).
2. Remove four locknuts (15) from studs (7). Discard locknuts (15).
3. Remove four locknuts (11), washers (10), screws (9), and panel (13) from side panels (8) and (12). Discard locknuts (11).
4. Attach chain to boom support (2) and lifting device.

WARNING

- All personnel must stand clear during lifting operations. A swinging or shifting load may cause injury to personnel.
- Ensure lifting capacity is greater than weight (1,800 lb (817 kg)) of tractor wrecker body. Failure to do so may result in injury to personnel or damage to equipment.

NOTE

Two assistants will help with step 5.

5. Lift pivot post (1), boom support (2), and base plate (4) from vehicle (5).
6. Set pivot post (1), boom support (2), and base plate (4) on blocking at least 8 in. (21 cm) high.
7. Remove four nuts (20), two clamp loops (19), wood blocks (18), and U-bolts (17) from tractor wrecker body (16) and frame (21).
8. Remove sixteen locknuts (22), wood blocks (23), and eight U-bolts (24) from tractor wrecker body (16) and frame (21). Discard locknuts (22).
9. Install two chains on tractor wrecker body (16).
10. Install lifting device on two chains.

WARNING

All personnel must stand clear during lifting operations. A swinging or shifting load may cause injury to personnel.

NOTE

Assistant will help with step 11.

11. Raise tractor wrecker body (16) away from frame (21) and lower onto supports.
12. Remove lifting device from two chains.
13. Remove two chains from tractor wrecker body (16).

15-8. TRACTOR WRECKER BODY REPLACEMENT (Contd)

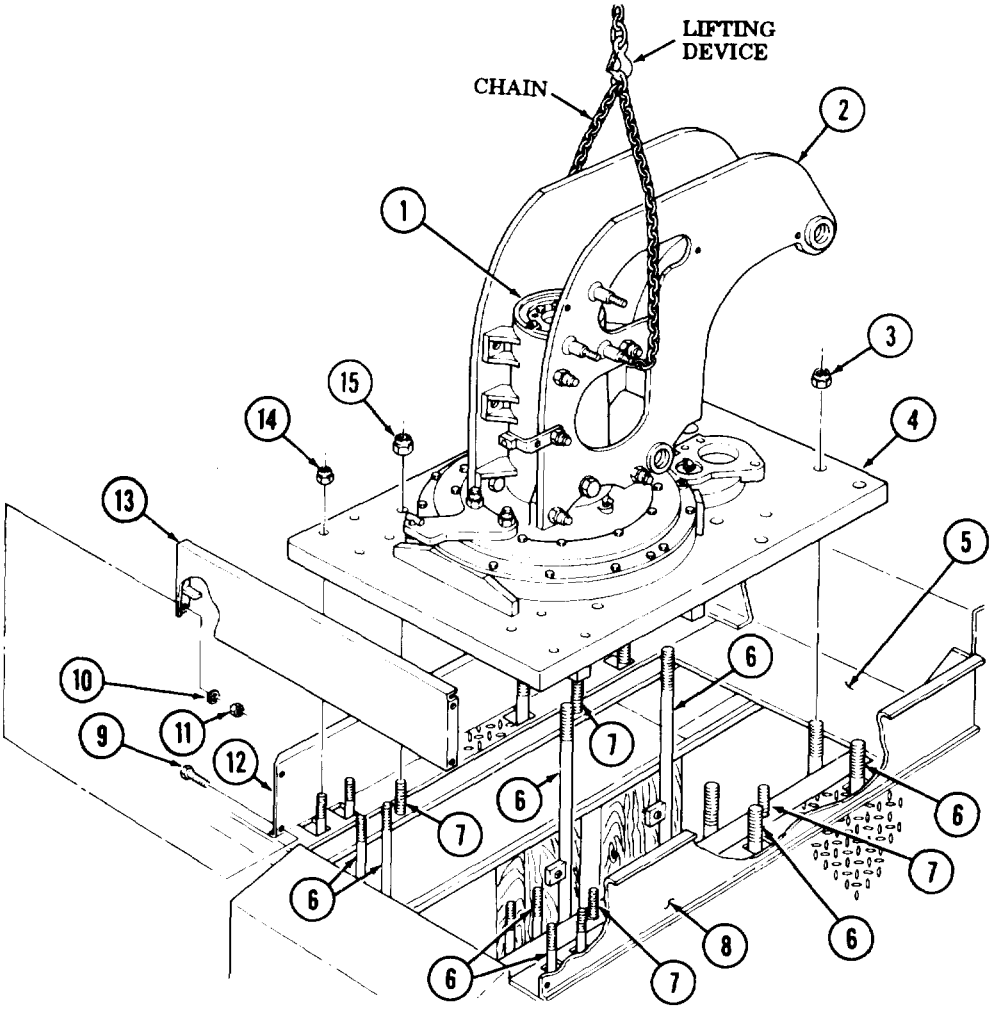

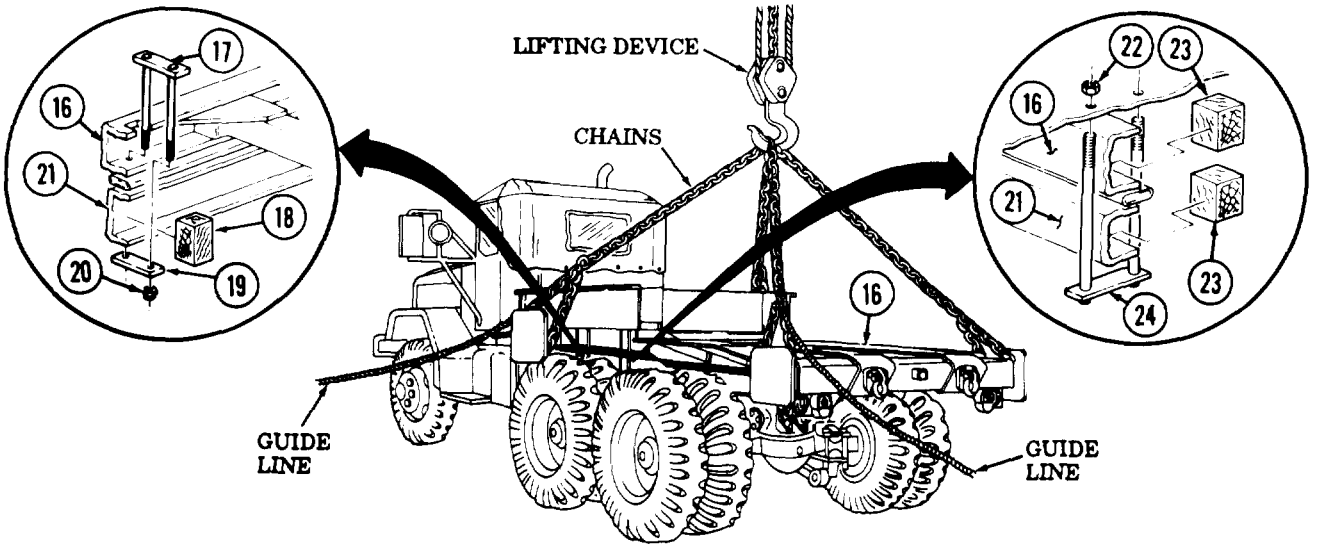

15-8. TRACTOR WRECKER BODY REPLACEMENT (Contd)

b. Installation

1. Install two chains on tractor wrecker body (1).
2. Install lifting device on two chains.

WARNING

- All personnel must stand clear during lifting operations. A swinging or shifting load may cause injury to personnel.
- Ensure lifting capacity is greater than weight (1,800 lb (817 kg)) of tractor wrecker body. Failure to do so may result in injury to personnel or damage to equipment.

NOTE

Assistant will help with step 3.

3. Raise tractor wrecker body (1) away from supports and lower onto frame (6).
4. Install sixteen wood blocks (8) on frame (6) and tractor wrecker body (1).
5. Install eight U-bolts (9) on frame (6) and tractor wrecker body (1) with sixteen new locknuts (7).
6. Install two wood blocks (3) on left and right frame rails (6).
7. Install two clamp loops (4) and U-bolts (2) on frame (6) and wrecker body (1) with four nuts (5).

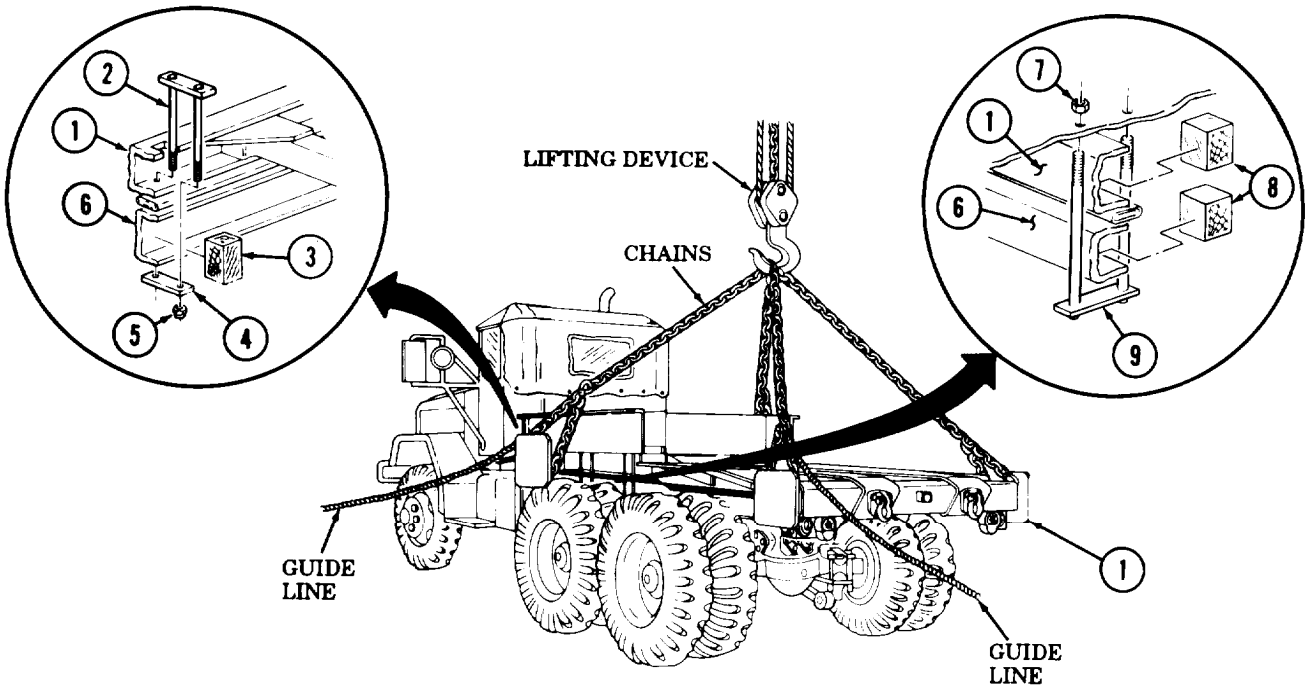

15-8. TRACTOR WRECKER BODY REPLACEMENT (Contd)

WARNING

All personnel must stand clear during lifting operations. A swinging or shifting load may cause injury to personnel.

8. Install chain on boom support (11).
9. Install lifting device on chain.
10. Lift pivot post (10), boom support (11), and base plate (13) from blocking.
11. Set pivot post (10), boom support (11), and base plate (13) on vehicle (14).
12. Install panel (22) on side panels (17) and (21) with four screws (18), washers (19), and new locknuts (20).
13. Install four new locknuts (24) on studs (16).
14. Install sixteen new locknuts (23) on eight U-bolts (15).

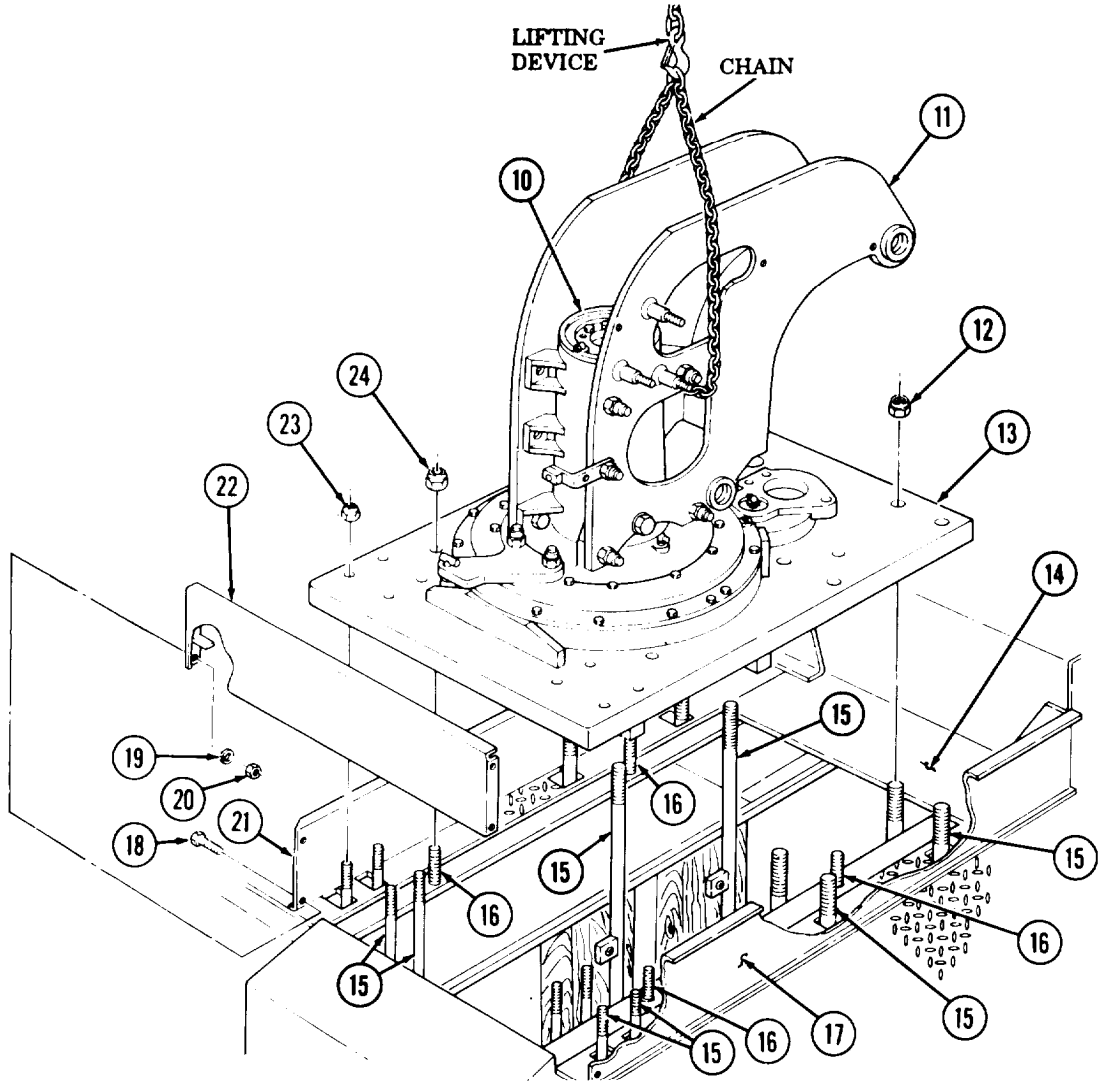

FOLLOW-ON TASKS:
- Install pivot post and base (para. 16-44).
- Install fifth wheel (TM 9-2320-260-20).
- Install front splash guards (TM 9-2320-260-20).
- Refill oil reservoir (LO 9-2320-260-12).

15-9. REAR FENDERS REPLACEMENT

THIS TASK COVERS:

a. Removal

b. Installation

INITIAL SETUP

APPLICABLE MODELS
M819

TOOLS
General mechanic's tool kit
(Appendix B, Item 1)

MATERIALS/PARTS
Eighteen lockwashers (Appendix D, Item 222)
Two lockwashers (Appendix D, Item 247)

REFERENCES (TM)
TM 9-2320-260-10
TM 9-2320-260-34P-2

EQUIPMENT CONDITION
Parking brake set (TM 9-2320-260-10).

NOTE

Both rear fenders are removed and installed the same. This procedure covers one rear fender.

a. Removal

1. Remove two screws (6), nuts (3), and lockwashers (4) from rear fender (5), two clamps (1), and flange (2). Discard lockwashers (4).
2. Remove six nuts (17), lockwashers (18), and screws (7) from rear fender (5) and two braces (11). Discard lockwashers (18).
3. Remove eight nuts (9), lockwashers (8), four screws (16), and screws (10) from rear fender (5) and tractor wrecker body (12). Discard lockwashers (8).
4. Remove four screws (19), nuts (15), and lockwashers (14) from rear fender (5) and splash guard (13). Discard lockwashers (14).

NOTE

Assistant will help with step 5.

5. Remove fender (5) from tractor wrecker body (12).

b. Installation

NOTE

Assistant will help with step 1.

1. Position rear fender (5) on tractor wrecker body (12).
2. Install four screws (19), new lockwashers (14), and nuts (15) on rear fender (5) and splash guard (13).
3. Install four screws (10), screws (16), eight new lockwashers (8), and nuts (9) in rear fender (5) and tractor wrecker body (12).
4. Install six screws (7), new lockwashers (18), and nuts (17) in rear fender (5) and two braces (11).
5. Install two clamps (1) and rear fender (5) on flange (2) with two screws (6), new lockwashers (4), and nuts (3).

15-9. REAR FENDERS REPLACEMENT (Contd)

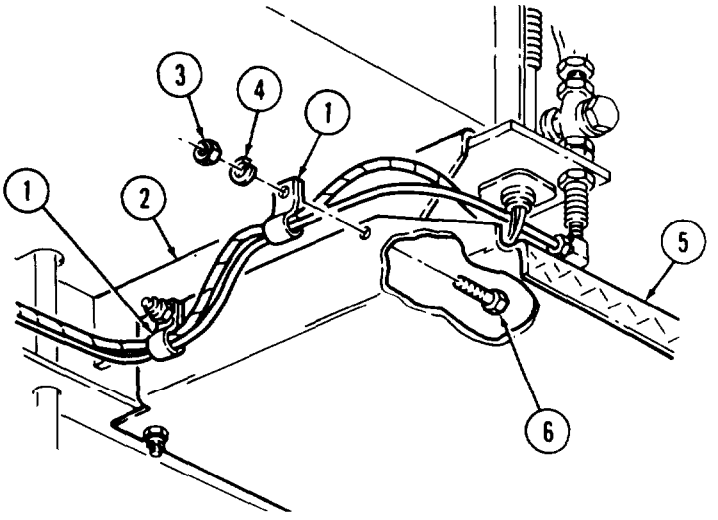

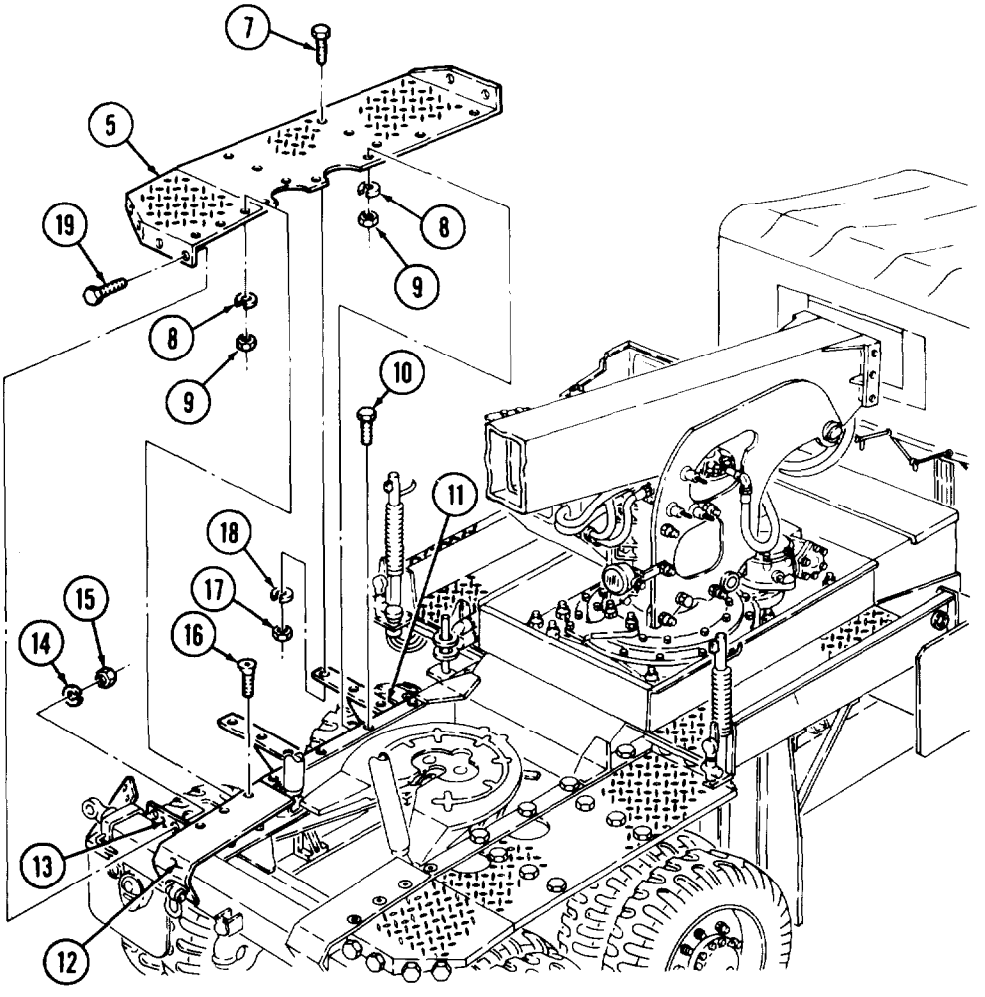

15-10. HYDRAULIC HOSE AND TUBE REPLACEMENT

THIS **TASK** COVERS:

a. Removal **b. Installation**

INITIAL SETUP

APPLICABLE MODELS
M819

TOOLS
General mechanic's tool kit (Appendix B, Item 1)

MATERIALS/PARTS
Cap and plug set (Appendix C, Item **6)**

REFERENCES (TM)
LO 9-2320-260-12
TM 9-2320-260-10
TM 9-2320-260-34P-2

EQUIPMENT CONDITION
- Parking brake set (TM 9-2320-260-10).
- Shipper brake in travel position (TM 9-2320-260-10).

NOTE

There are three types of hydraulic hose and tube connections found on the M816 and M819 wreckers. This procedure covers the solid female and swivel male connection.

a. Removal

CAUTION

- Clean area around hoses and lines before removal to prevent entry of dirt. Damage will occur if dirt or dust enters system.
- Cap or plug all openings after disconnecting tubes and hoses to prevent contamination. Failure to do so may result in hydraulic pump damage.
- Do not twist hose during removal. Damage to hose may occur.

NOTE

- Tag all hoses and tubes for installation.
- Use more than one wrench for removal and installation of hoses and tubes.
- Hose and fittings connected by a single hexagonal nut cannot be disconnected until the swivel nut connection at the opposite end is removed. The entire hose must be free to turn when removing this type of hose connection.
- Have drainage container ready to catch oil.

1. Separate two hoses (1) and (2) from fittings (7) and (8).
2. Remove hose (2) from check valve (4).
3. Remove hose (1) from elbow (3).
4. Remove bypass hose (6) from elbow (5).
5. Remove bypass hose (6) from elbow (9).

15-10. HYDRAULIC HOSE AND TUBE REPLACEMENT (Contd)

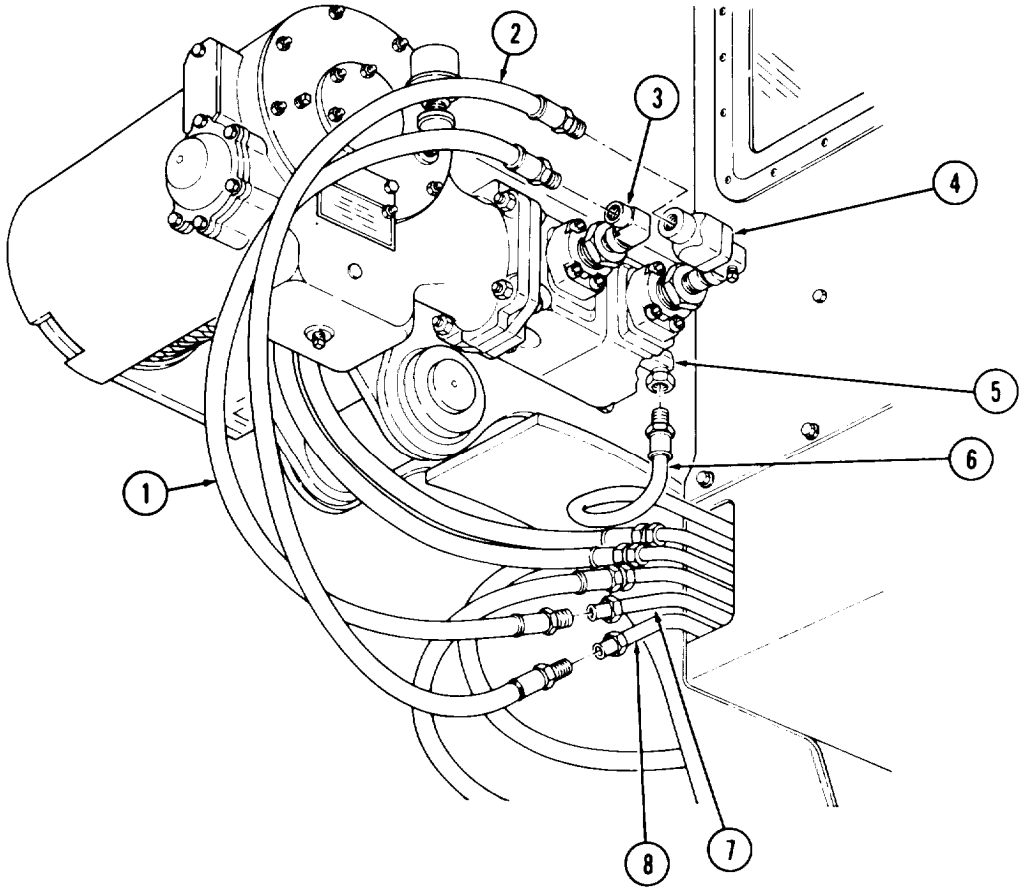

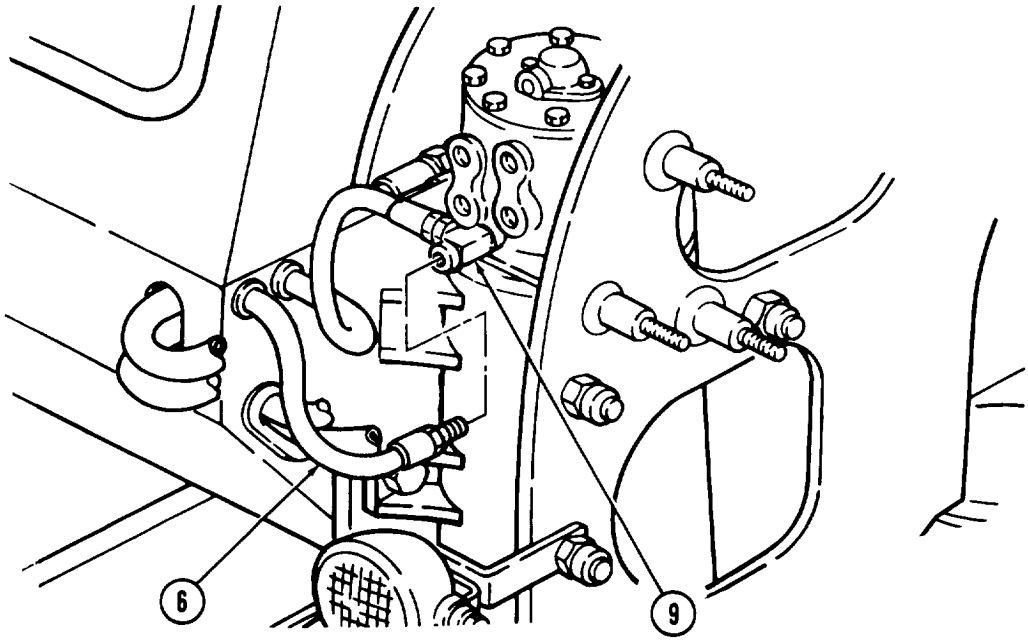

15-10. HYDRAULIC HOSE AND TUBE REPLACEMENT (Contd)

b. Installation

1. Install bypass hose (6) on elbow (9).
2. Install bypass hose (6) on elbow (5).
3. Install hose (1) on elbow (3).
4. Install hose (2) on check valve (4).
5. Connect two hoses (1) and (2) to fittings (7) and (8).

15-10. HYDRAULIC HOSE AND TUBE REPLACEMENT (Contd)

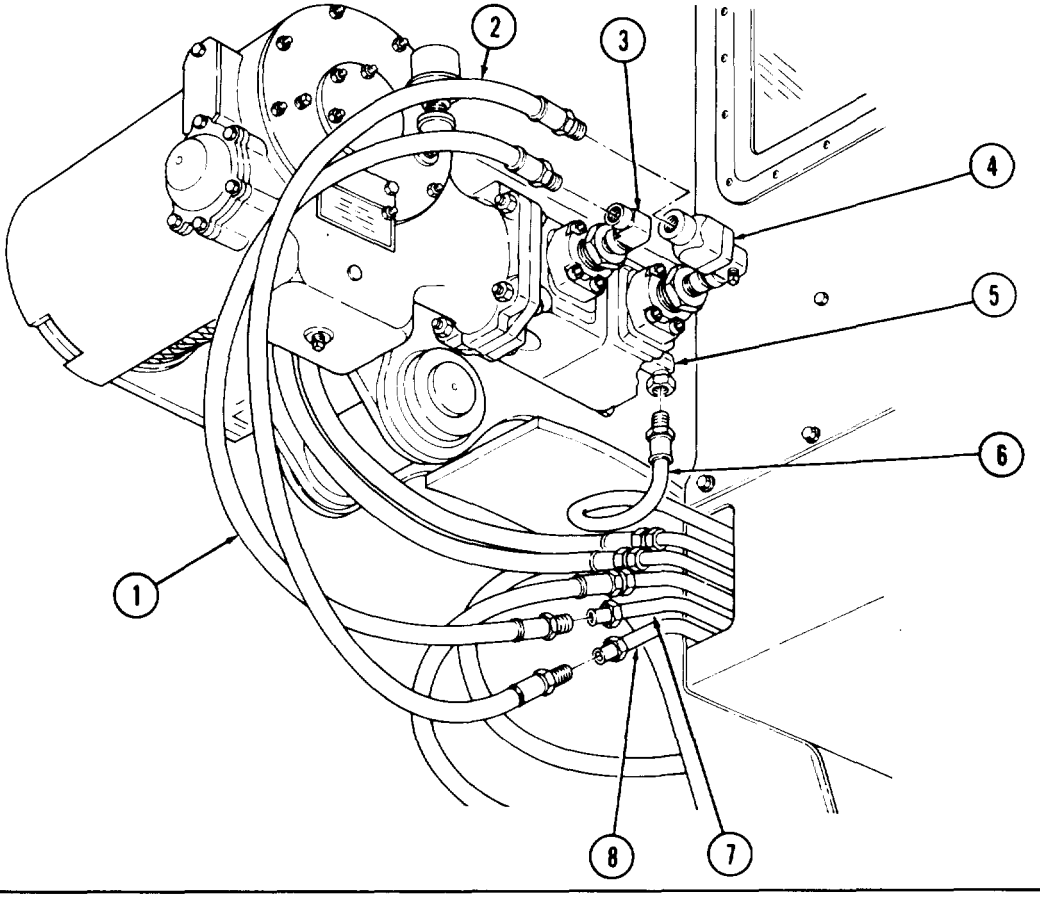

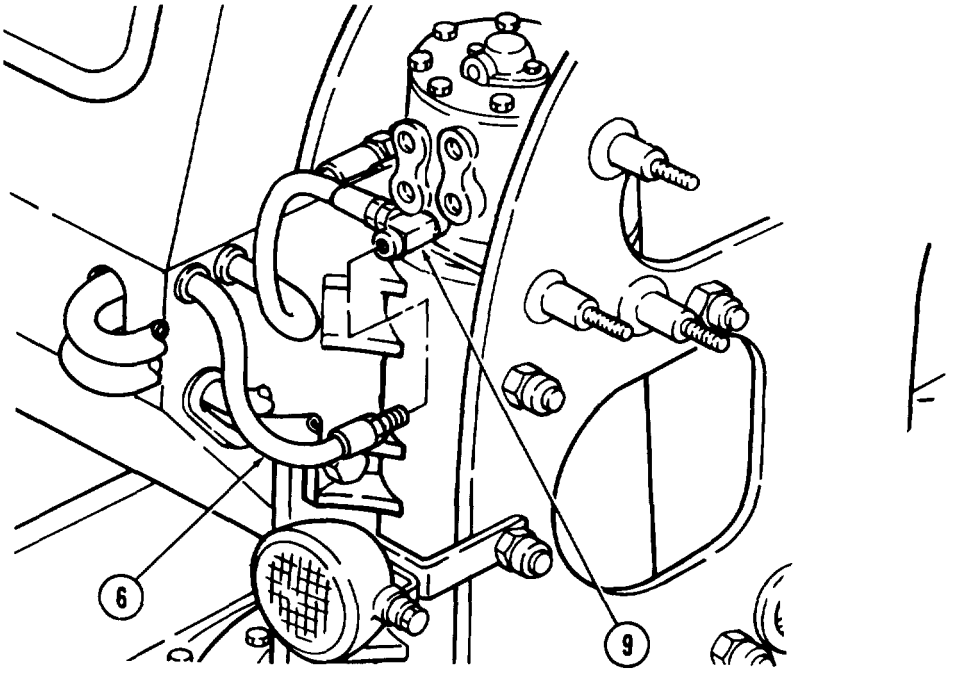

Section IV. DUMP BODY MAINTENANCE

15-11. DUMP BODY MAINTENANCE INDEX

PARA. NO.	TITLE	PAGE NO.
15-12.	Cab Protector Shield Maintenance	15-24
15-13.	Dump Body Maintenance	15-28
15-14.	Roller Arm Maintenance	15-35
15-15.	Hoist Cylinder Maintenance	15-38
15-16.	Hoist Safety Latch Maintenance	15-48
15-17.	Hoist Pump Maintenance	15-52
15-18.	Subframe Replacement	15-56
15-19.	Control Valve Maintenance	15-60
15-20.	Hydraulic Hoses Replacement	15-64
15-21.	Safety Brace Replacement	15-69

15-12. CAB PROTECTOR SHIELD MAINTENANCE

THIS TASK COVERS:

a. Removal
b. Cleaning and Inspection
c. Installation

INITIAL SETUP

APPLICABLE MODELS

M817

TOOLS

General mechanic's tool kit (Appendix B, Item 1)
Lifting device
Two screws (Appendix C, Item 34)
Two nuts (Appendix C, Item 25)
Four washers (Appendix C, Item 57)
Chain
Supports

MATERIALS/PARTS

Twelve locknuts (Appendix D, Item 169)
Four cotter pins (Appendix D, Item 20)

REFERENCES (TM)

TM 9-237
TM 9-2320-260-10
TM 9-2320-260-34P-2

EQUIPMENT CONDITION

Parking brake set (TM 9-2320-260-10).

GENERAL SAFETY INSTRUCTIONS

- All personnel must stand clear during lifting operations.
- Ensure lifting capacity is greater than weight of protector shield.

a. Removal

1. Attach chain to cab protector shield (1) with two screws (2), four washers (3), and two nuts (4).
2. Attach lifting device to chain.
3. Remove eight locknuts (14), screws (16), and washers (15) from cab protector shield (1) and dump body (11). Discard locknuts (14).
4. Remove four cotter pins (10), nuts (9), washers (8), washers (6), and screws (5) from cab protector shield (1) and dump body (11). Discard cotter pins (10).

15-12. CAB PROTECTOR SHIELD MAINTENANCE (Contd)

5. Remove four locknuts (7), screws (13), and washers (12) from cab protector shield (1) and dump body (11). Discard locknuts (7).

WARNING

- All personnel must stand clear during lifting operations. A shifting or swinging load may cause injury to personnel.
- Ensure lifting capacity is greater than weight (465 lb (211 kg)) of cab protector shield, Failure to do so may result in injury to personnel or damage to equipment,

NOTE

Assistant will help with step 6.

6. Raise cab protector shield (1) away from dump body (11) and lower onto supports,
7. Remove lifting device from chain,
8. Remove two nuts (4), screws (2), four washers (3), and chain from cab protector shield (1).

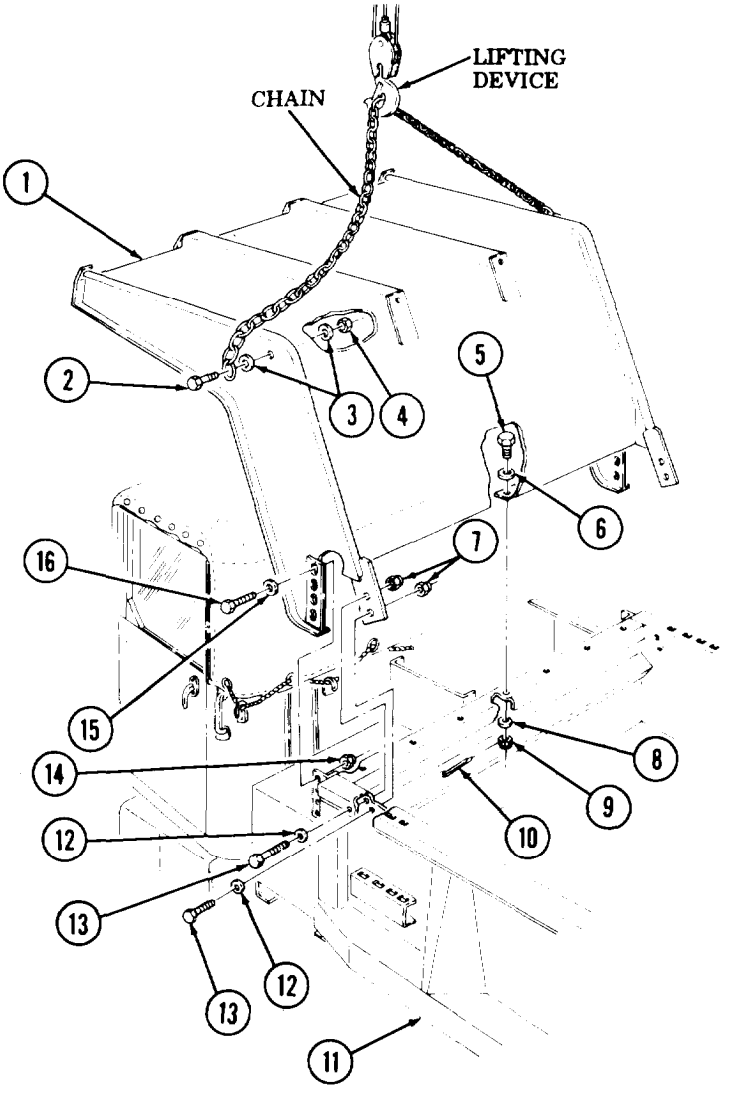

15-12. CAB PROTECTOR SHIELD MAINTENANCE (Contd)

b. Cleaning and Inspection

1. For general cleaning instructions, refer to para. 2-8.
2. Inspect cab protector shield (1) for cracks, breaks, and broken welds. Repair broken welds, cracks, and breaks (TM 9-237).

c. Installation

1. Install two screws (2), four washers (3), two nuts (4), and chain on cab protector shield (1).
2. Attach lifting device to chain.

WARNING

- All personnel must stand clear during lifting operations. A swinging or shifting load may cause injury to personnel.
- Ensure lifting capacity is greater than weight (465 lb (211 kg)) of cab protector shield. Failure to do so may result in injury to personnel or damage to equipment,

NOTE

Assistant will help with step 3.

3. Raise cab protector shield (1) away from supports and lower onto dump body (11).

NOTE

Ensure holes of cab protector shield aline with holes of dump body.

4. Install cab protector shield (1) on dump body (11) with four screws (13), washers (12), and new locknuts (7).
5. Install cab protector shield (1) on dump body (11) with four washers (6), screws (5), washers (8), nuts (9), and new cotter pins (10).
6. Install cab protector shield (1) on dump body (11) with eight washers (15), screws (16), and new locknuts (14).
7. Remove lifting device from chain.
8. Remove two nuts (4), screws (2), washers (3) and chain from cab protector shield (1).

15-12. CAB PROTECTOR SHIELD MAINTENANCE (Contd)

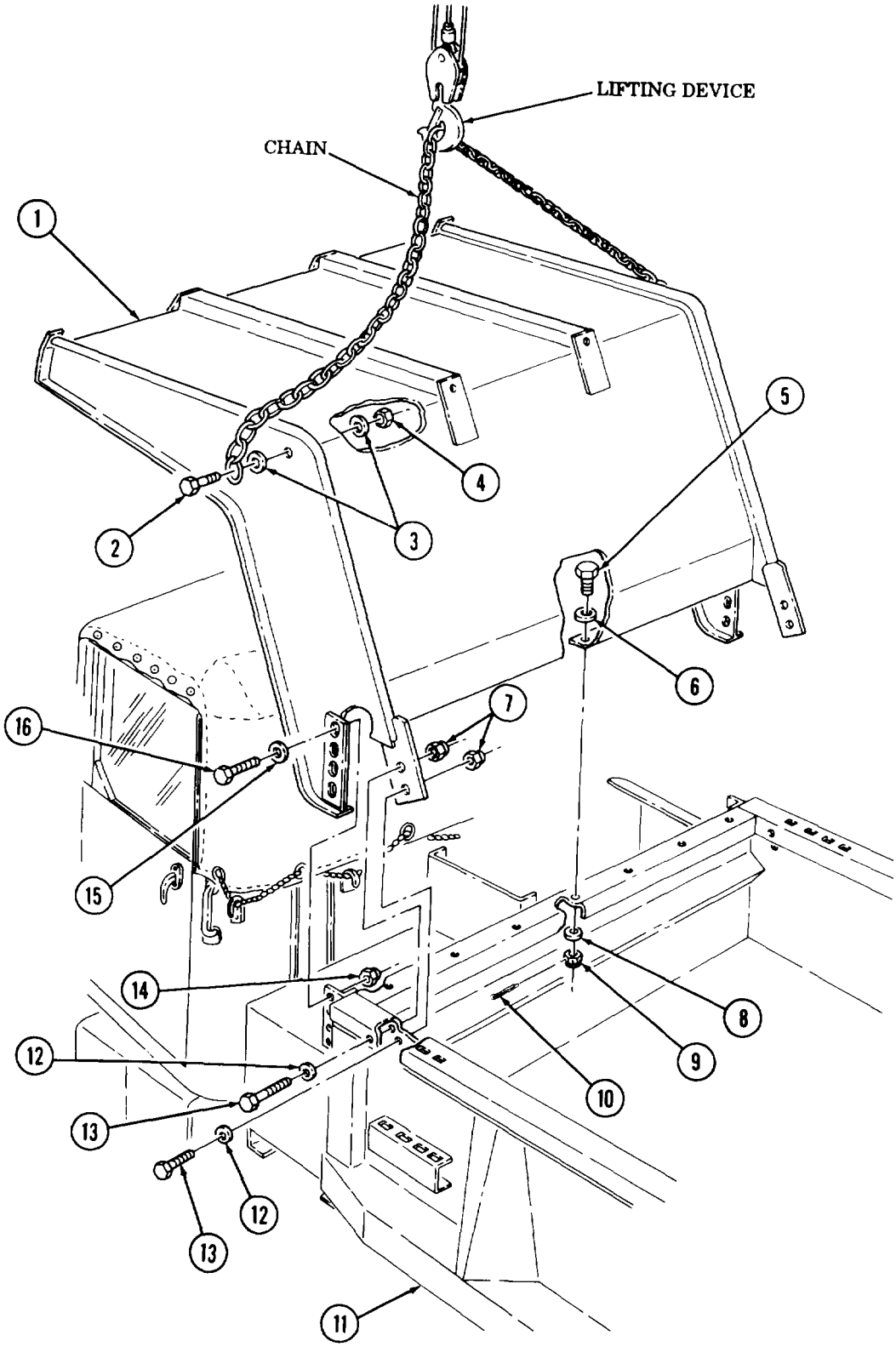

15-13. DUMP BODY MAINTENANCE

THIS TASK COVERS:

a. Removal
b. Cleaning, Inspection, and Repair
c. Installation

INITIAL SETUP

APPLICABLE MODELS
M817

TOOLS
General mechanic's tool kit (Appendix B, Item 1)
Lifting device
Two chains
Guide lines

MATERIALS/PARTS
Twelve locknuts (Appendix D, Item 173)
Two locknuts (Appendix D, Item 175)
Two locknuts (Appendix D, Item 199)

PERSONNEL REQUIRED
Two

REFERENCES (TM)
LO 9-2320-260-12
TM 9-237
TM 9-2320-260-10
TM 9-2320-260-20
TM 9-2320-260-34P-2
TM 43-0139

EQUIPMENT CONDITION
- Parking brake set (TM 9-2320-260-10).
- Wheels chocked (TM 9-2320-260-10).
- Remove cab protector shield (para. 15-12).

GENERAL SAFETY INSTRUCTIONS
- Position safety braces before working under raised dump body.
- Do not operate dump controls when dump body is removed.
- All personnel must stand clear during lifting operations.
- Ensure lifting capacity is greater than weight of dump body.

a. Removal

WARNING

Never work under raised dump body until safety braces are properly positioned, Injury to personnel may result if dump body suddenly lowers.

1. Raise dump body (2) and position two safety braces (1) in upright position,

NOTE

Step 2 must be performed for right and left sides of vehicle.

2. Remove screw (5), locknut (3), and lubrication fitting (6) from thrust plate pin (4). Discard locknut (3).
3. Lower safety braces (1) to lowest position and lower dump body (2).
4. Attach two chains to dump body (2) and lifting device.
5. Raise lifting device until slack is removed from chains.

15-13. DUMP BODY MAINTENANCE (Contd)

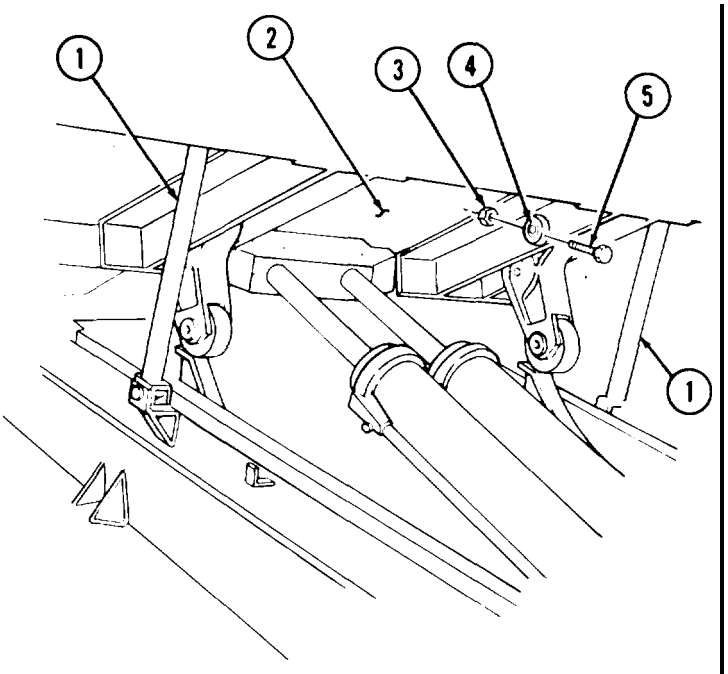

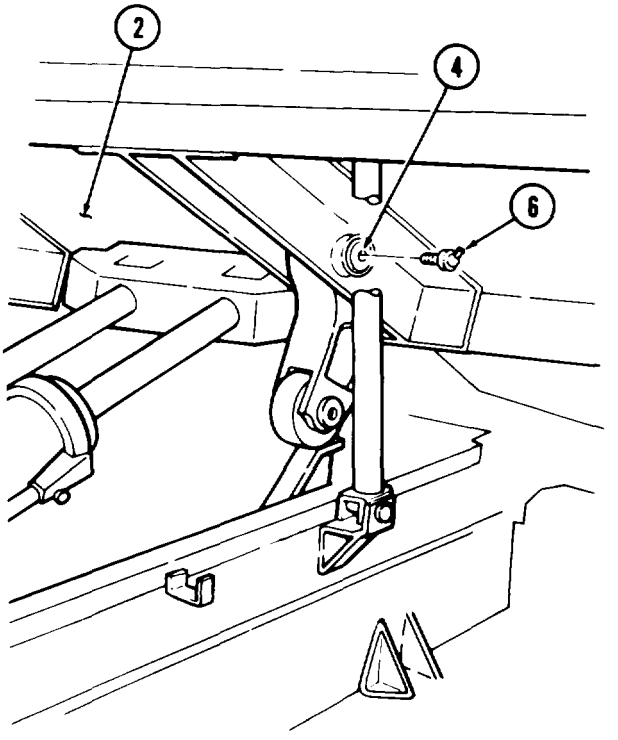

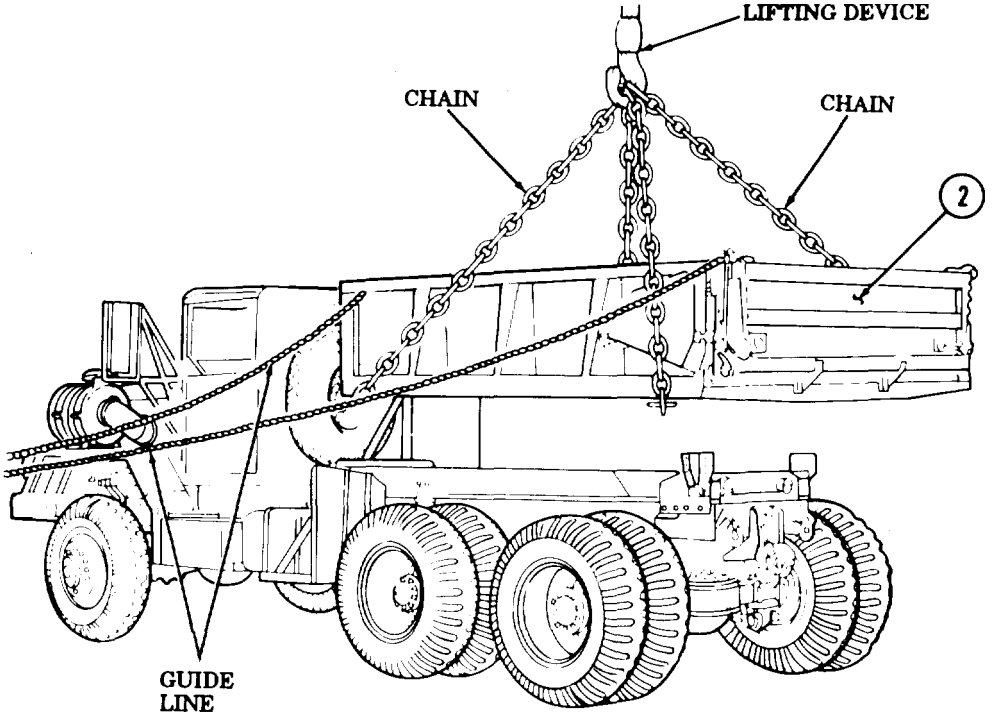

15-13. DUMP BODY MAINTENANCE (Contd)

WARNING

Do not operate dump controls when dump body is removed. Injury to personnel may result if lift cylinder is operated when not secured.

NOTE

Steps 6 through 10 must be performed for right and left sides of vehicle.

6. Remove thrust plate pin (1) from thrust plate (2) and roller arm (4).
7. Remove six locknuts (7) and screws (8) from hinge bracket (6). Discard locknuts (7).
8. Remove lubrication fitting (5) from hinge pin (11).
9. Remove locknut (10) and screw (9) from hinge bracket (6). Discard locknut (10).
10. Remove hinge pin (11) from hinge bracket (6).
11. Remove hinge bracket (6) from dump body (3).
12. Connect guide lines to front and rear of dump body (3).

WARNING

- All personnel must stand clear during lifting operations. A shifting or swinging load may cause injury to personnel.
- Ensure lifting capacity is greater than weight (2,700 lb (1,226 kg)) of dump body. Failure to do so may result in injury to personnel or damage to equipment.

NOTE

Assistant will help with steps 13 and 14.

13. Raise dump body (3) clear of subframe (12) and place on supports.
14. Remove chains and guide lines from dump body (3) and lifting device.

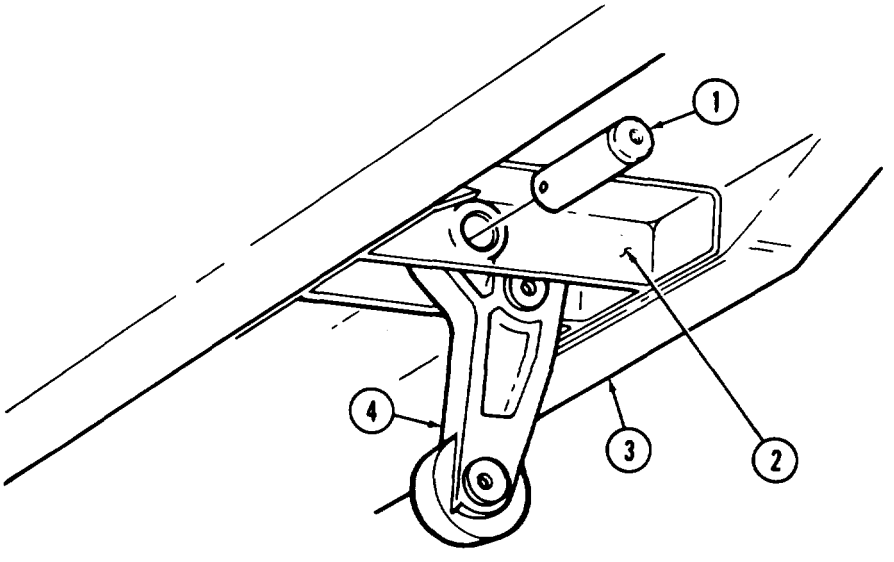

15-13. DUMP BODY MAINTENANCE (Contd)

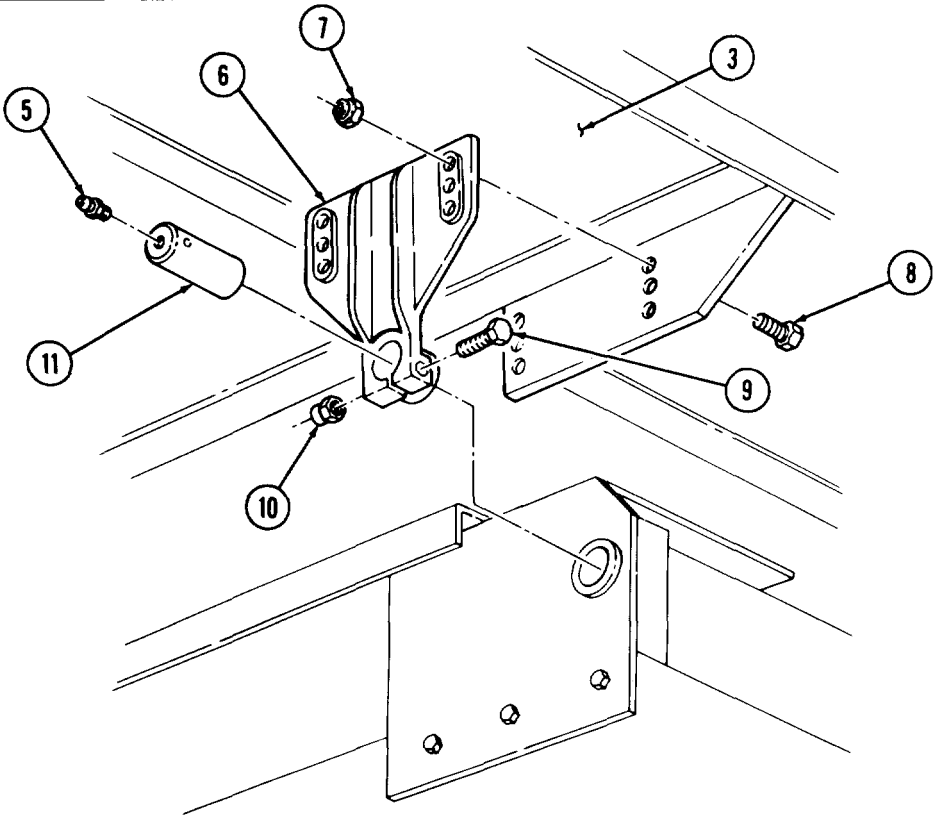

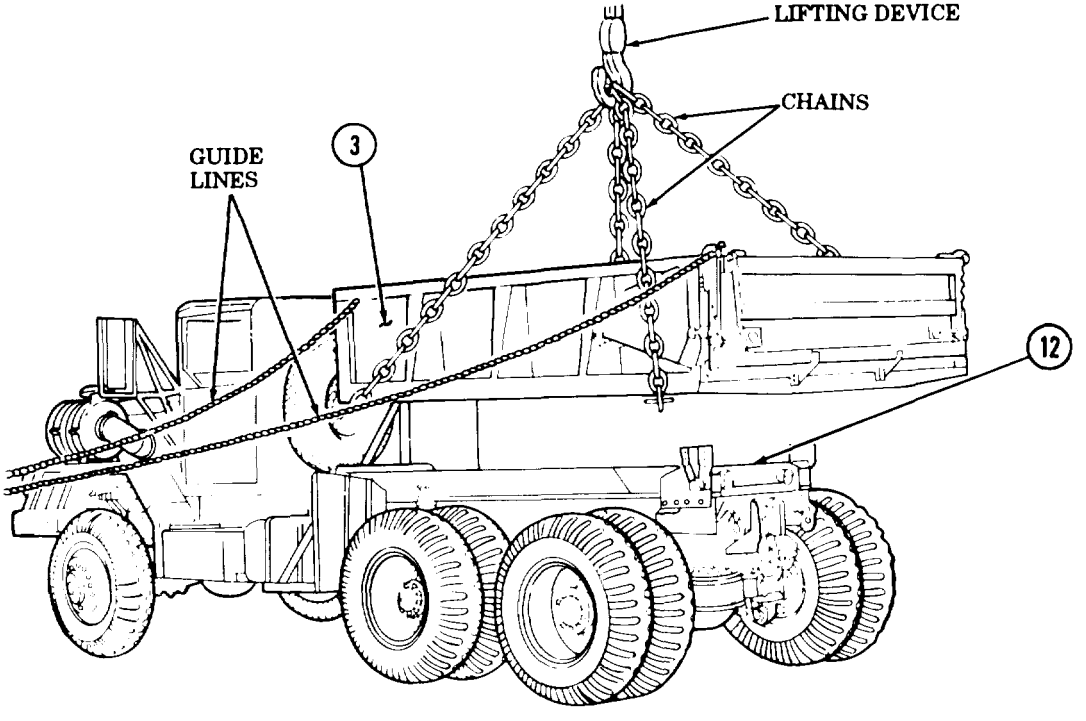

15-13. DUMP BODY MAINTENANCE (Contd)

b. Cleaning, Inspection, and Repair

1. For general cleaning instructions, refer to para. 2-8.
2. Inspect dump body (1) for dents, cracks, rust, and broken welds. Repair dump body (1) if dented, cracked, rusted, or welds are broken (TM 9-237).
3. Clean and paint dump body (1) as necessary (TM 43-0139).

c. Installation

1. Attach two chains and guide lines to dump body (1) and lifting device.

WARNING

- All personnel must stand clear during lifting operations. A shifting or swinging load may cause injury to personnel.
- Ensure lifting capacity is greater than weight (2,700 lb (1,226 kg)) of dump body. Failure to do so may result in injury to personnel or damage to equipment.

NOTE

Assistant will help with steps 2 through 11.

2. Raise dump body (1) clear of supports and position on subframe (2).

NOTE

Steps 3 through 5 apply to both left and right sides of vehicle.

3. Install hinge bracket (4) on dump body (1) with six screws (6) and new locknuts (5).
4. Insert hinge pin (9) in hinge bracket (4) and secure with screw (7) and new locknut (8).
5. Install lubrication fitting (3) in hinge pin (9).
6. Remove two guide lines from dump body (1).
7. Remove chains from dump body (1) and lifting device.

15-13. DUMP BODY MAINTENANCE (Contd)

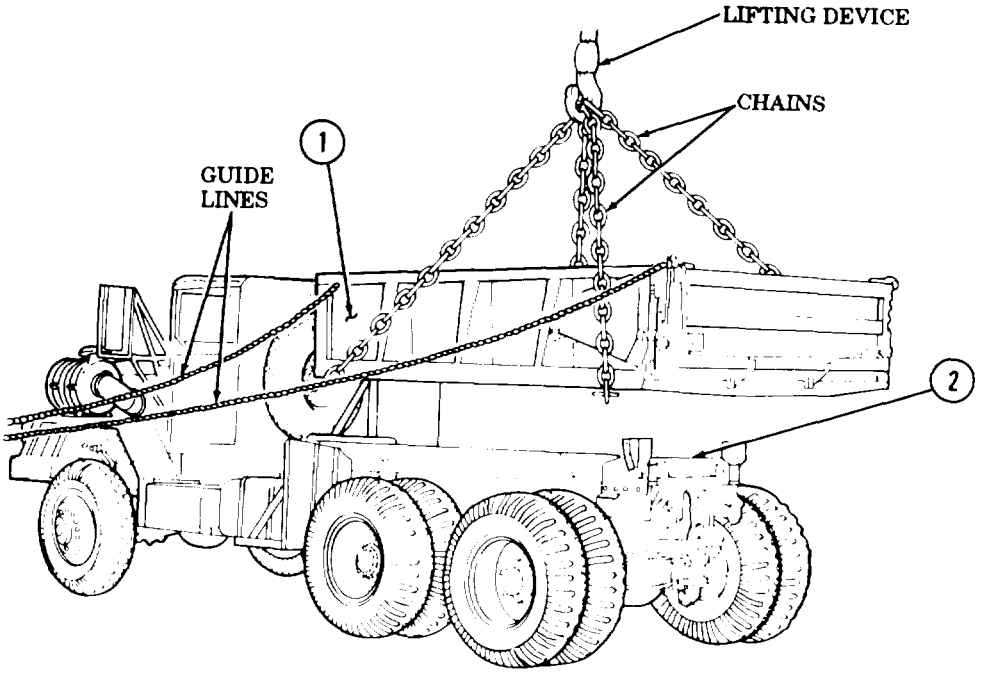

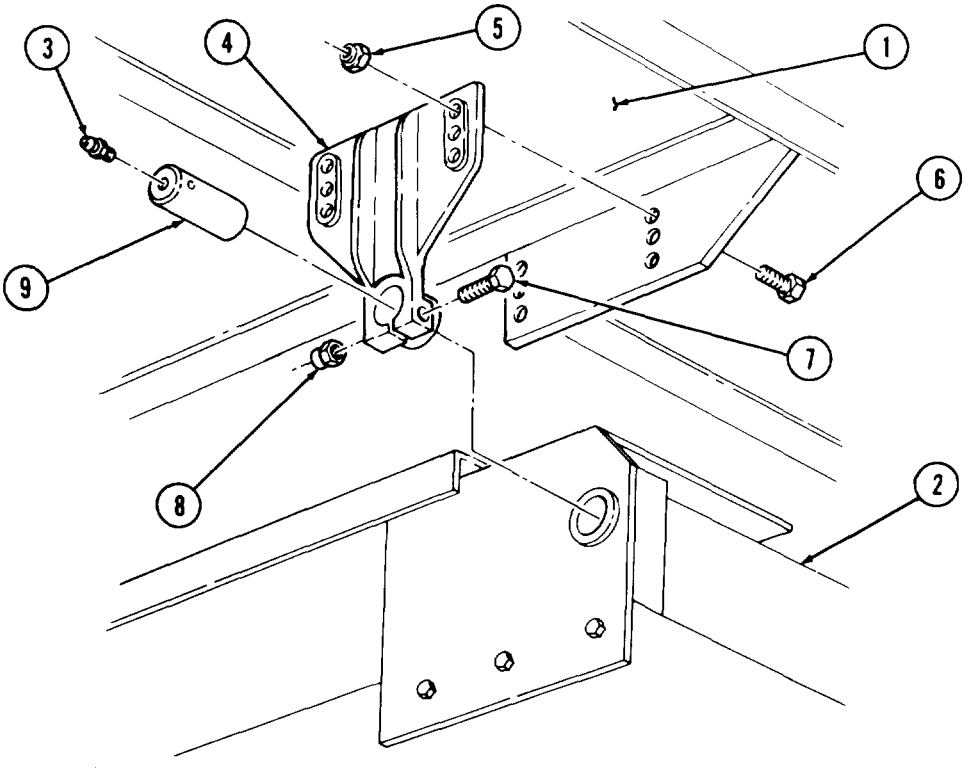

15-13. DUMP BODY MAINTENANCE (Contd)

WARNING

Never work under dump body until safety braces are properly positioned. Injury to personnel may result if dump body suddenly lowers.

8. Raise dump body(1) and position two safety braces (8) in upright position on dump body (1),

NOTE

Steps 9 and 10 apply to both left and right sides of vehicle.

9. Install thrust plate pin (3) in thrust plate (5) and roller arm (7) with screw (6) and new locknut (4).
10. Install lubrication fitting (2) on thrust plate pin (3).
11. Lower safety braces (8) to lowest position and lower dump body (1).

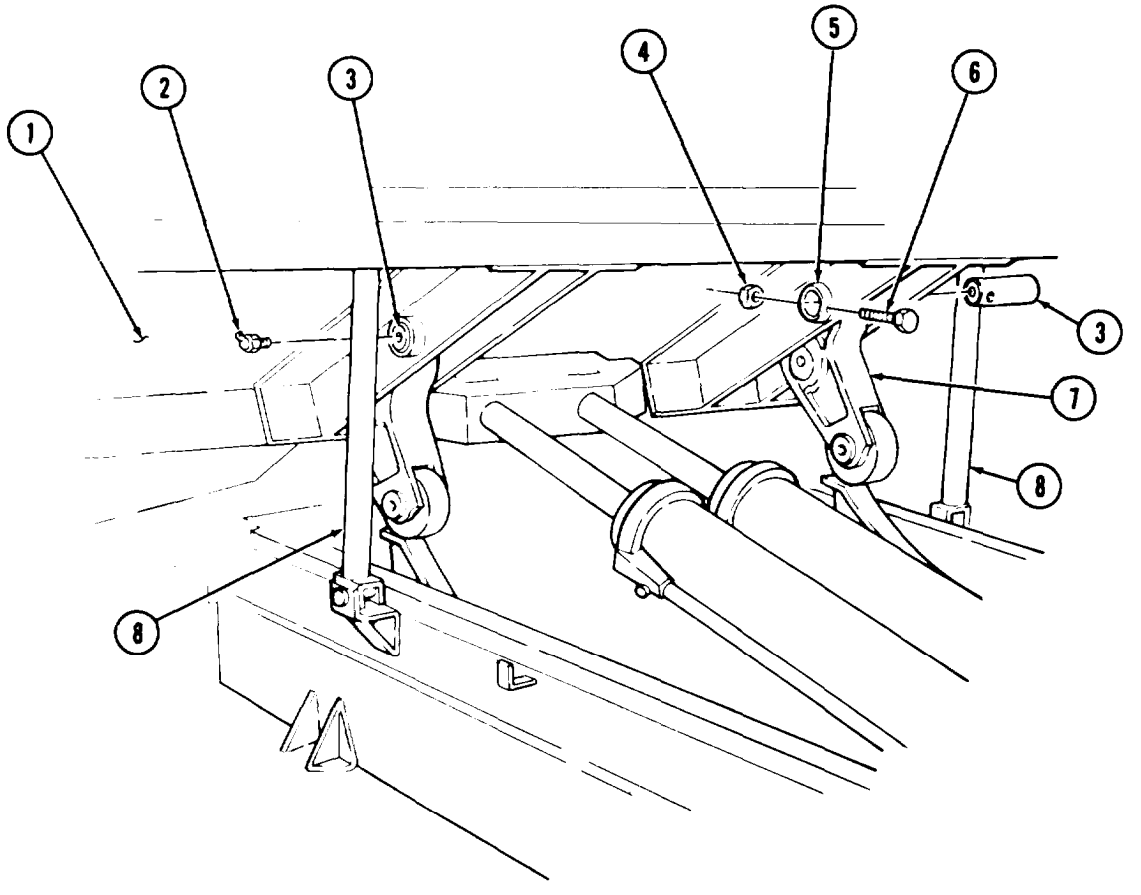

FOLLOW-ON TASK: Lubricate dump body (LO 9-2320-260-12).

15-14. ROLLER ARM MAINTENANCE

THIS TASK COVERS:

a. Removal
b. Disassembly
c. Cleaning and Inspection
d. Assembly
e. Installation

INITIAL SETUP

APPLICABLE MODELS
M817

TOOLS
General mechanic's tool kit (Appendix B, Item 1)
Soft-head hammer (Appendix B, Item 47)
Lifting device
Chain

MATERIALS/PARTS
GAA grease (Appendix C, Item 14)

REFERENCES (TM)
LO 9-2320-260-12
TM 9-214
TM 9-2320-260-34P-2

EQUIPMENT CONDITION
Dump body removed (para. 15-13).

GENERAL SAFETY INSTRUCTIONS
Do not operate dump controls when dump body is removed.

WARNING

Do not operate dump controls when dump body is removed. Injury to personnel may result if lift cylinder is operated when not secured.

NOTE

Both roller arms are maintained the same. This procedure covers one roller arm.

a. Removal

1. Attach chain to crosshead (1) and lifting device and remove slack from chain.
2. Remove roller arm (2) from crosshead shaft (3).

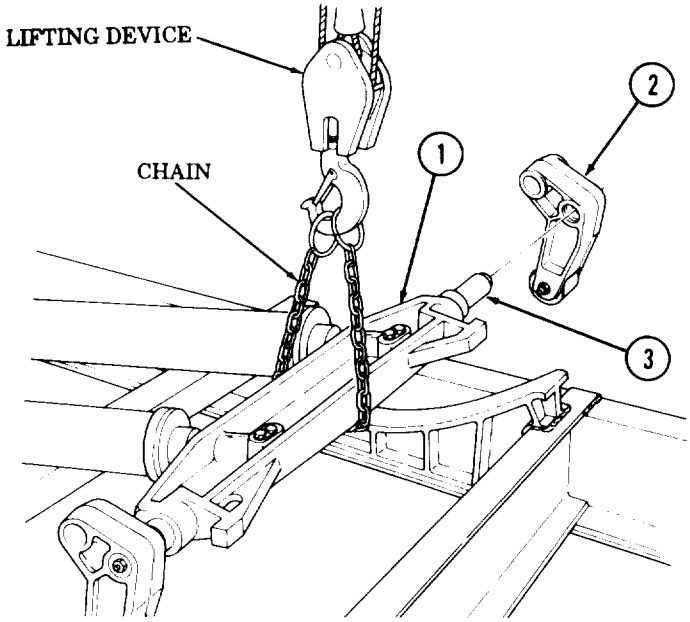

15-14. ROLLER ARM MAINTENANCE (Contd)

b. Disassembly

1. Using punch and hammer, remove two pins (2) from roller pin (6) and roller arm (4).
2. Remove two lubrication fittings (5) from roller pin (6).
3. Using brass drift and hammer, drive roller pin (6) from roller arm (4) and roller (7).
4. Remove roller (7) from roller arm (4).

c. Cleaning and Inspection

1. For general cleaning instructions, refer to para. 2-8.
2. Inspect roller (7) and roller pin (6) for cracks and deep grooves. Replace roller (7) or roller pin (6) if cracked or deeply grooved.
3. Inspect roller arm (4) for breaks and cracks. Replace roller arm (4) if broken or cracked.
4, Inspect two bearings (3) (TM 9-214). Replace bearings (3) if damaged.

NOTE

- Perform steps 5 and 6 if bearings are to be replaced,
- Apply GAA grease to bearings for installation.

5. Using brass drift and hammer, drive bearings (3) from roller arm (4). Discard bearings (3).
6. Using wood block and hammer, install bearings (3) flush into roller arm (4).

d. Assembly

1. Position roller (7) in roller arm (4)

NOTE

Apply a light coat of GAA grease to roller pin before installation

2. Using soft-head hammer, install roller pin (6) in roller arm (4) and roller (7).
3. Install two lubrication fittings (5) on roller-pin (6).
4. Install roller (7) on roller arm (4) with two pins (2).

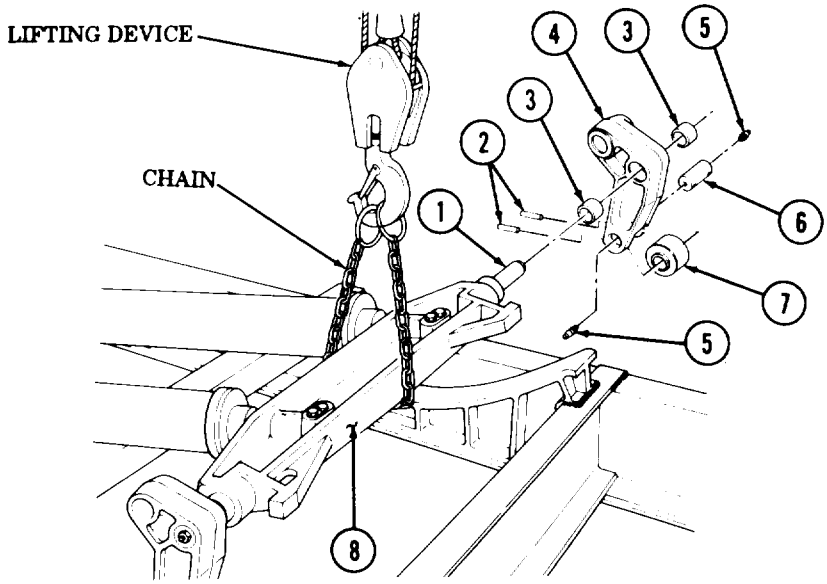

15-14. ROLLER ARM MAINTENANCE (Contd)

e. Installation

1. Install roller arm (4) on crosshead shaft (l).
2, Remove chain from crosshead (8) and lifting device.

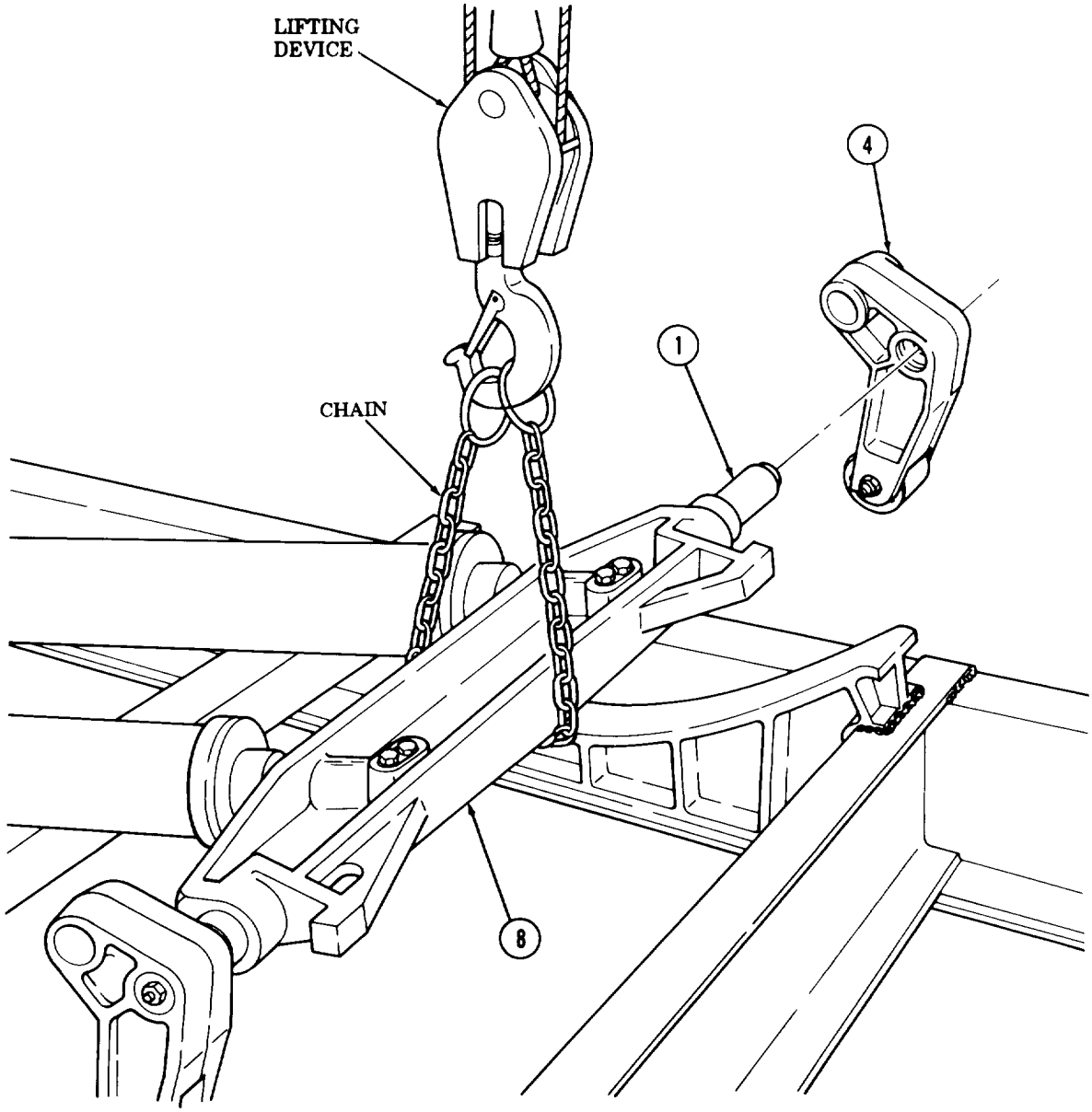

FOLLOW-ON TASKS: • Install dump body (para. 15-13).
• Lubricate roller arm (LO 9-2320-260-12).

15-15. HOIST CYLINDER MAINTENANCE

THIS TASK COVERS:

a. Removal
b. Disassembly
c. Cleaning and Inspection
d. Assembly
e. Installation

INITIAL SETUP

APPLICABLE MODELS
M817

TOOLS
General mechanic's tool kit (Appendix B, Item 1)
Torque wrench, 3/8-in. dr. (Appendix B, Item 4)
Ring compressor (Appendix B, Item 15)
Spring tester (Appendix B, Item 10)
Lifting device
Two chains

MATERIALS/PARTS
Three ring, spacers (Appendix D, Item 519)
Fourteen lockwashers (Appendix D, Item 215)
Four lockwashers (Appendix D, Item 218)
Three piston rings (Appendix D, Item 319)
Packing (Appendix D, Item 301)
O-ring (Appendix D, Item 271)
Cotter pin (Appendix D, Item 16)
GAA grease (Appendix C, Item 14)
Lint-free cloth (Appendix C, Item 9)

PERSONNEL REQUIRED
Two

REFERENCES (TM]
LO 9-2320-260-12
TM 9-2320-260-10
TM 9-2320-260-34P-2

EQUIPMENT CONDITION
- Roller arms removed (para. 15-14).

GENERAL SAFETY INSTRUCTIONS
- Do not operate dump controls when dump body is removed.
- All personnel must stand clear during lifting operations.
- Ensure lifting capacity is greater than weight of hoist cylinder.
- Plugs are under spring tension. Release plugs slowly.

a. Removal

WARNING

Do not operate dump controls when dump body is removed. Injury to personnel may result if lift cylinder is operated when not secured.

CAUTION

Cap or plug all openings immediately after disconnecting lines and hoses to prevent contamination. Remove caps or plugs prior to connection. Failure to do so may result in damage to equipment.

NOTE

Tag all lines and hoses for installation, Have drainage container ready to catch hydraulic oil.

1. Remove two hydraulic hoses (1) from hoist cylinder (2).
2. Remove two screws (5), lockwashers (4), upper crosshead retainer (6), lower crosshead retainer (7), and crosshead (3) from piston rod (8). Discard lockwashers (4).
3. Remove four screws (9), lockwashers (10), and two bearing caps (11) from hoist cylinder (2) and subframe (12). Discard lockwashers (10).
4. Attach two chains on hoist cylinder (2) and lifting device.

15-15. HOIST CYLINDER MAINTENANCE (Contd)

WARNING

- All personnel must stand clear during lifting operations. A swinging or shifting load may cause injury to personnel.
- Ensure lifting capacity is greater than weight (500 lb (227 kg)) of hoist cylinder. Failure to do so may result in injury to personnel or damage to equipment.

5. Raise hoist cylinder (2) from subframe (12) and place on supports.
6. Remove chains from hoist cylinder (2) and lifting device.

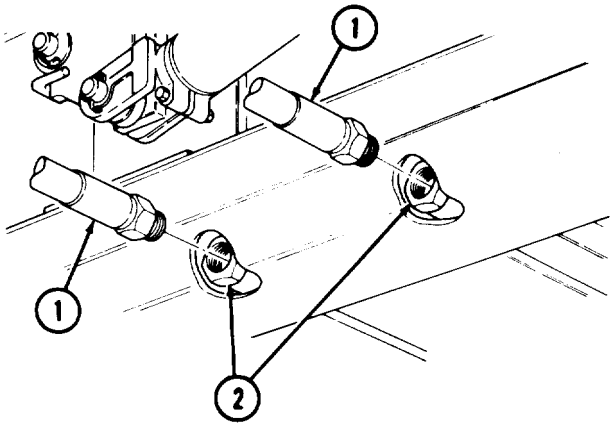

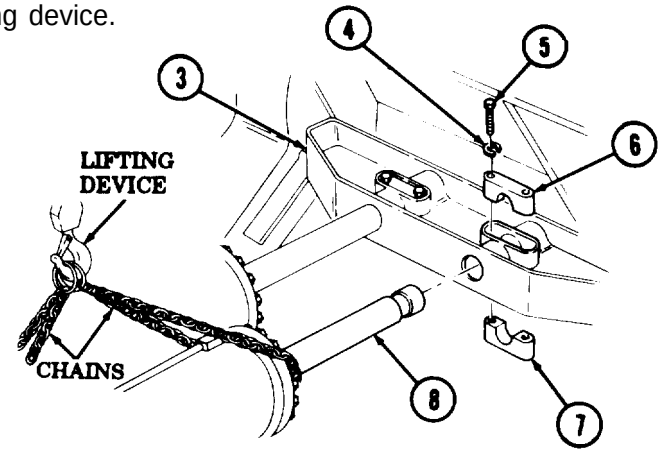

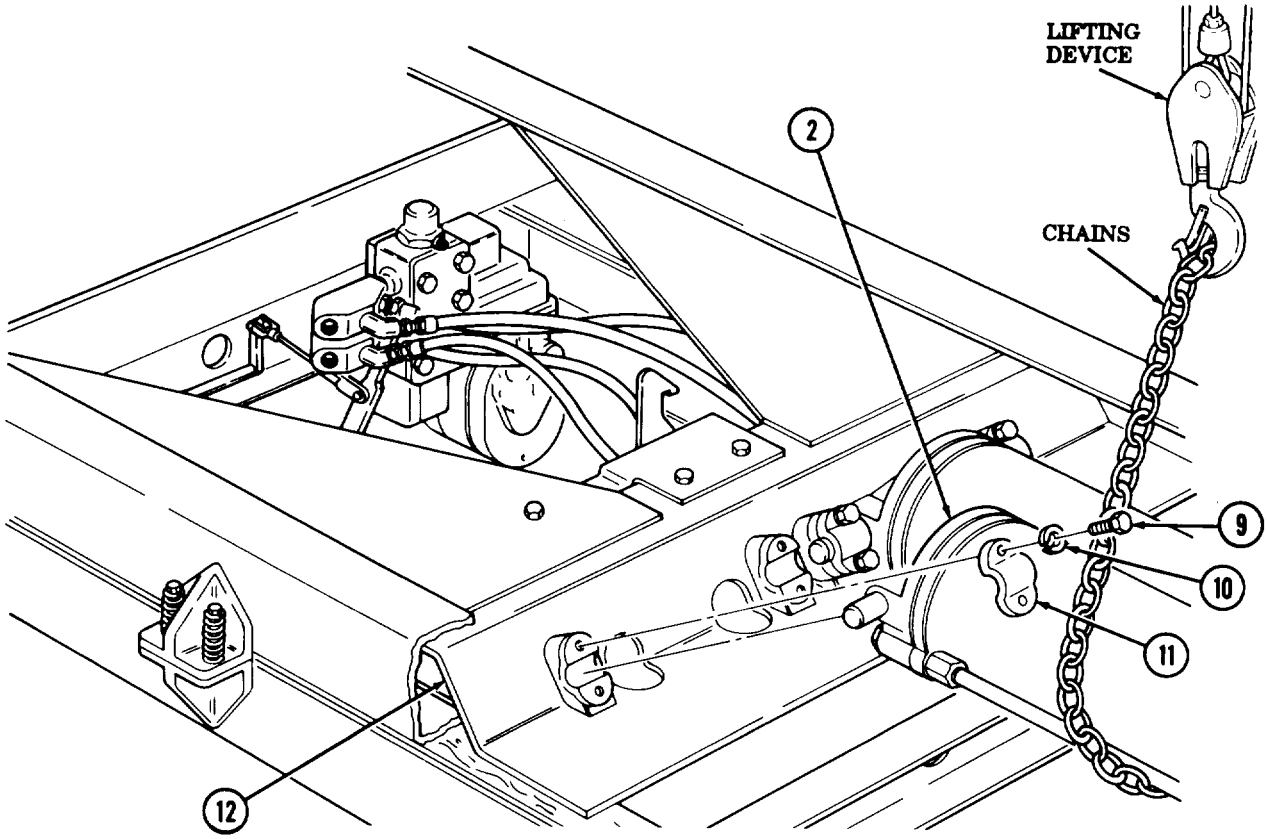

15-15. HOIST CYLINDER MAINTENANCE (Contd)

b. Disassembly

1. Remove lubrication fitting (5) from hinge pin (6).
2. Remove two screws (13) from cylinder base (7) and slide hinge pin (6) out of cylinder base (7).
3. Remove three screws (21) from retainer (20) and cylinder head (16).
4. Tap retainer (20) free of cylinder head (16) and slide off piston rod (22).
5. Remove ten screws (18) and lockwashers (17) from cylinder head (16) and cylinder housing (4). Discard lockwashers (17).
6. Remove cylinder head (16) from cylinder housing (4).
7. Remove packing (19) and O-ring (15) from cylinder head (16). Discard packing (19) and O-ring (15).

NOTE

Care must be used when removing piston rod and piston to prevent damage to cylinder base or piston.

8. Remove piston rod (22) and piston (24) from cylinder housing (4).
9. Remove cotter pin (14) and nut (25) from piston rod (22). Discard cotter pin (14).
10. Slide piston (24) off piston rod (22).
11. Remove three piston rings (23) from piston (24). Discard piston rings (23).

WARNING

Bypass plugs are under tension. Remove plugs slowly. Failure to do so may result in injury to personnel.

NOTE

Tag plugs for installation.

12. Remove three bypass plugs (3), springs (2), and check balls (1) from cylinder housing (4).
13. Remove two adapters (9), two ring spacers (8), orifice plug cover (10), ring spacer (11), and orifice plug (12) from cylinder base (7). Discard ring spacers (8) and (11).

15-15. HOIST CYLINDER MAINTENANCE (Contd)

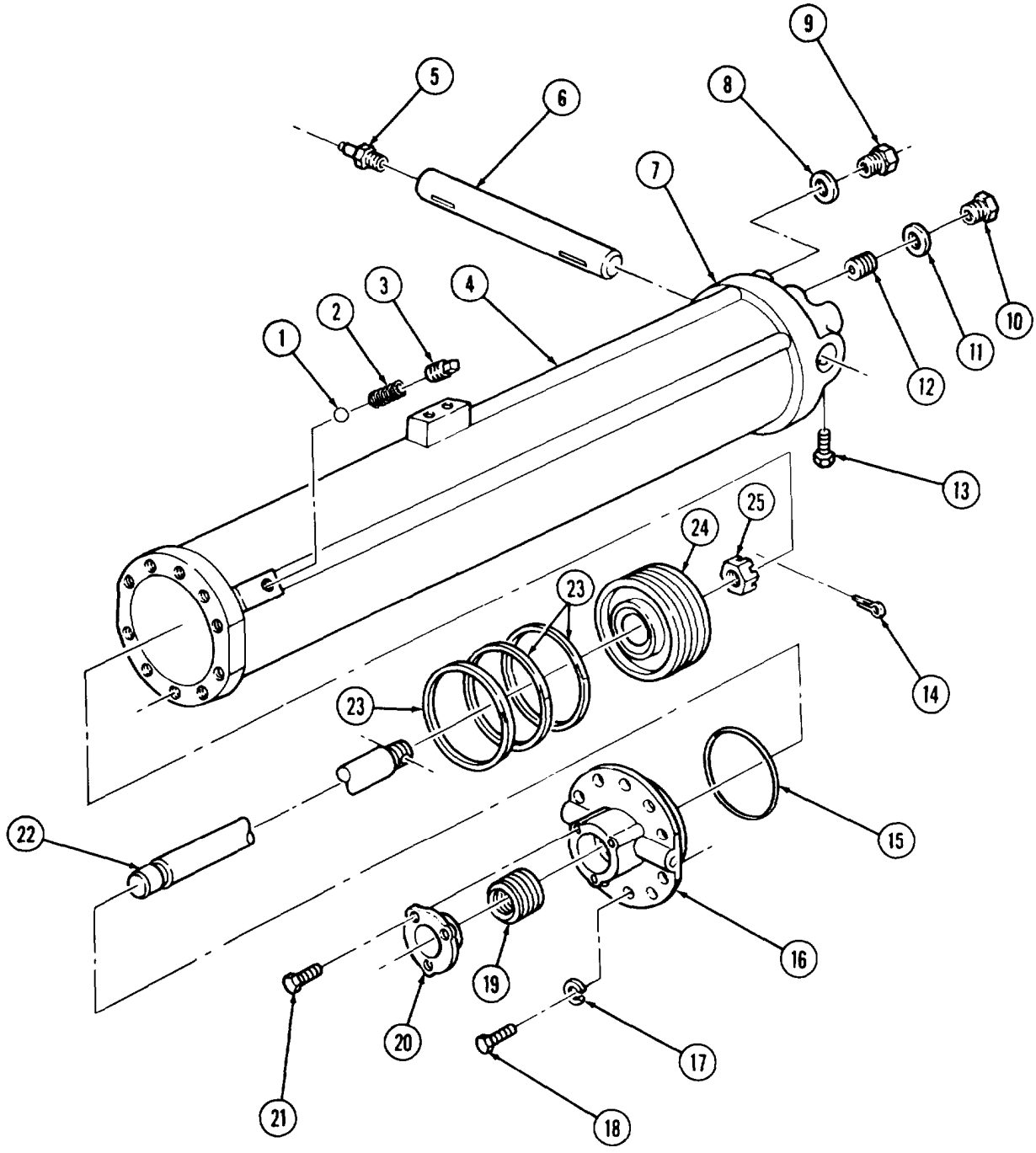

c. Cleaning and Inspection

1. For general cleaning instructions, refer to para. 2-8.
2. Inspect three check balls (2) for scratches, chips, and seat wear marks. Replace check balls (2) if scratched, chipped, or marked.
3. Inspect three springs (1) for wear. Replace springs (1) if spring free length is not 1.25 in. (31.75 mm).
4. Inspect orifice plug (4) for scratches and chips. Replace orifice plug (4) if scratched or chipped.
5. Inspect cylinder housing (3), piston (5), piston rod (6), retainer (7), and cylinder head (8) for cracks, breaks, scratches, chips, scoring, and excessive wear. Refer to table 15-1, Hoist Cylinder Wear Limits, for measurements. Replace part(s) if damaged or worn.

Table 15-1. Hoist Cylinder Wear Limits.

ITEM NO.	ITEM/POINT OF MEASUREMENT	WEAR LIMITS/TOLERANCES	
		INCHES	MILLIMETERS
3	Cylinder housing – inner diameter	5.250-5.254	133.35-133.45
5	Piston		
	Outer diameter	5.241-5.244	133.12-133.20
	Inner diameter	1.251-1.252	31.78-31.80
6	Piston rod		
	Outer diameter	1.997-2.000	50.72-50.80
	Inner diameter	1.249-1.250	31.72-31.75
7	Retainer		
	Outer diameter	2.618-2.620	66.50-66.55
	Inner diameter	2.005-2.007	50,93-50.98
8	Cylinder head		
	Outer diameter	5.246-5.248	133.25-133.30
	Inner diameter	4.770-4.774	121.16-121.26

15-15. HOIST CYLINDER MAINTENANCE (Contd)

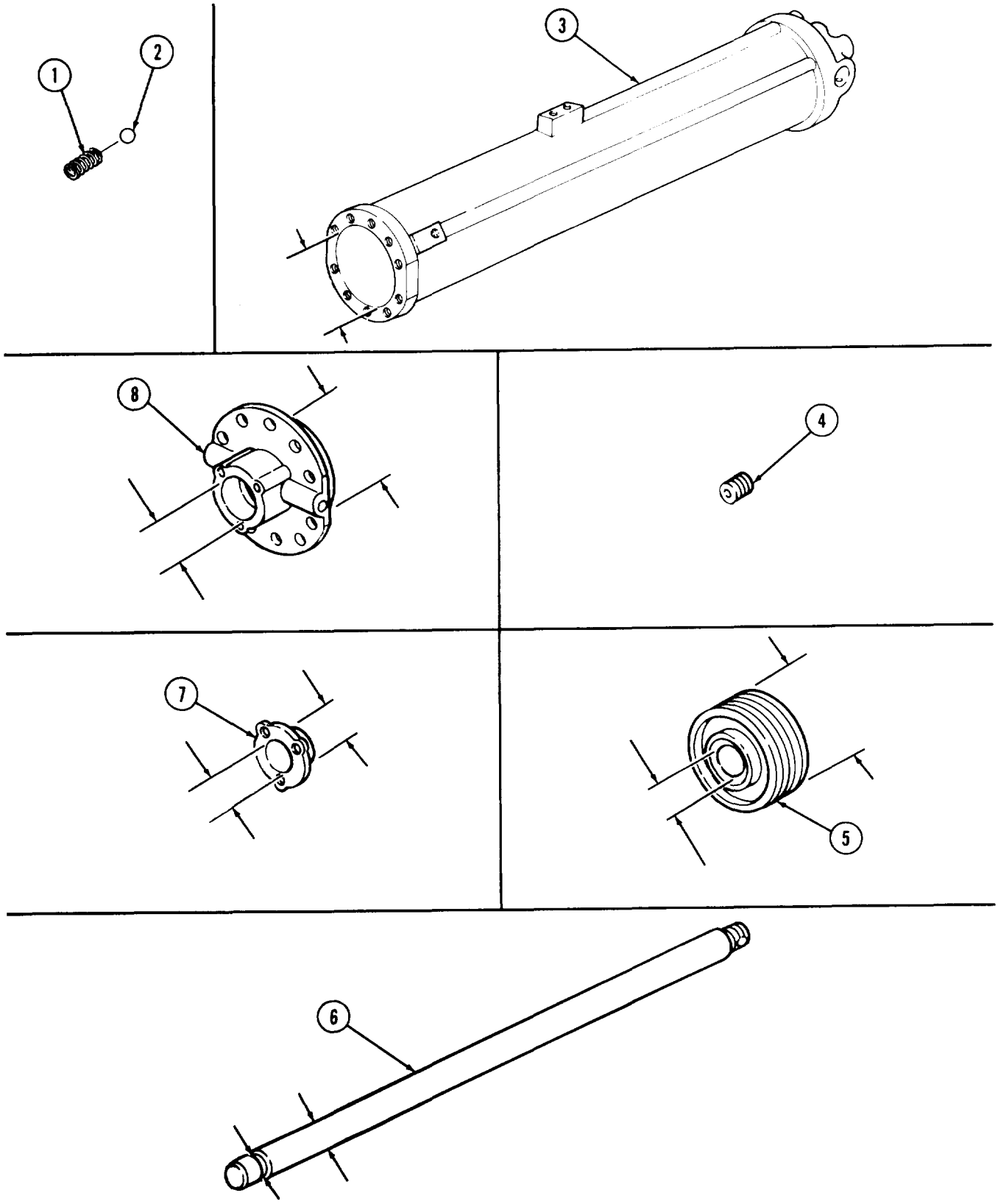

15-15. HOIST CYLINDER MAINTENANCE (Contd)

d. Assembly

NOTE

Coat all internal parts and seals with GAA grease for assembly.

1. Install three new piston rings (23) on grooves of piston (24). Ensure gaps in piston rings (23) are staggered around piston (24).
2. Slide piston (24) on piston rod (22) and install with nut (25) and new cotter pin (14).

CAUTION

Care must be used when installing piston rod and piston to prevent damage to cylinder bore or piston.

3. Install piston (24) and piston rod (22) in cylinder housing (4) with ring compressor.
4. Install new O-ring (15) on cylinder head (16).
5. Slide cylinder head (16) over piston rod (22) and position on cylinder housing (4).
6. Install cylinder head (16) on cylinder housing (4) with ten new lockwashers (17) and screws (18). Tighten screws (18) 8-10 lb-ft (11-14 N.m).
7. Position new packing (19) in cylinder head (16).
8. Position retainer (20) on piston rod (22) against packing (19) and install on cylinder head (16) with three screws (21).
9. Install orifice plug (12), new ring spacer (11), orifice plug cover (10), two ring spacers (8), and two adapters (9) in cylinder base (7).
10. Install three bypass check balls (1), springs (2), and plugs (3) in cylinder housing (4).
11. Install hinge pin (6) in cylinder base (7) with two screws (13).
12. Install lubrication fitting (5) on hinge pin (6).

15-15.HOIST CYLINDER MAINTENANCE (Contd)

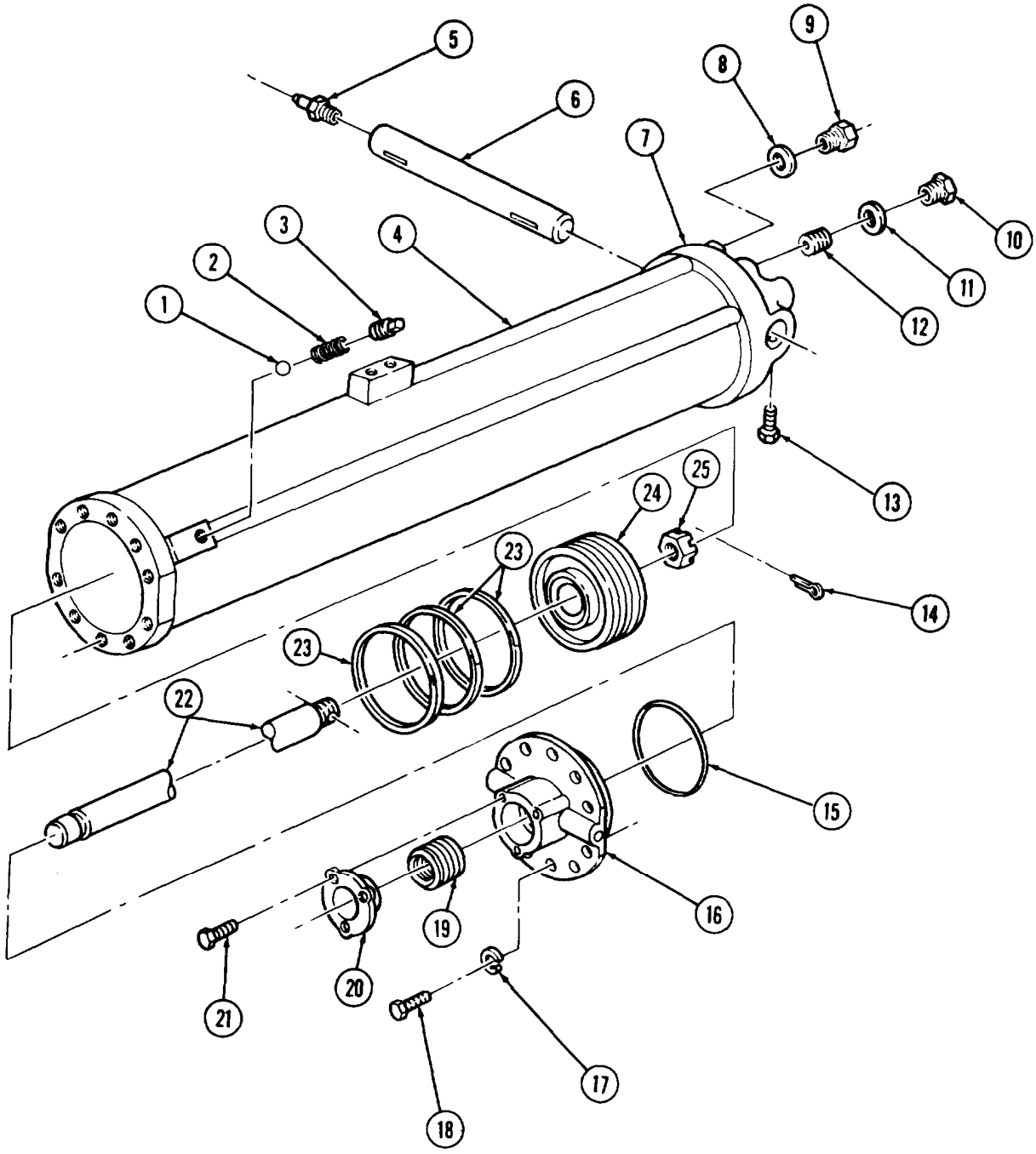

15-15. HOIST CYLINDER MAINTENANCE (Contd)

e. Installation

1. Attach two chains to hoist cylinder (2) and lifting device.

WARNING

- All personnel must stand clear during lifting operations. A swinging or shifting load may cause injury to personnel.
- Ensure lifting capacity is greater than weight (500 lb (227 kg)) of hoist cylinder. Failure to do so may result in injury to personnel or damage to equipment.

2. Raise hoist cylinder (2) from supports and position on sub frame (5).
3. Install hoist cylinder (2) on subframe (5) with two bearing caps (4), four new lockwashers (3), and screws (1).

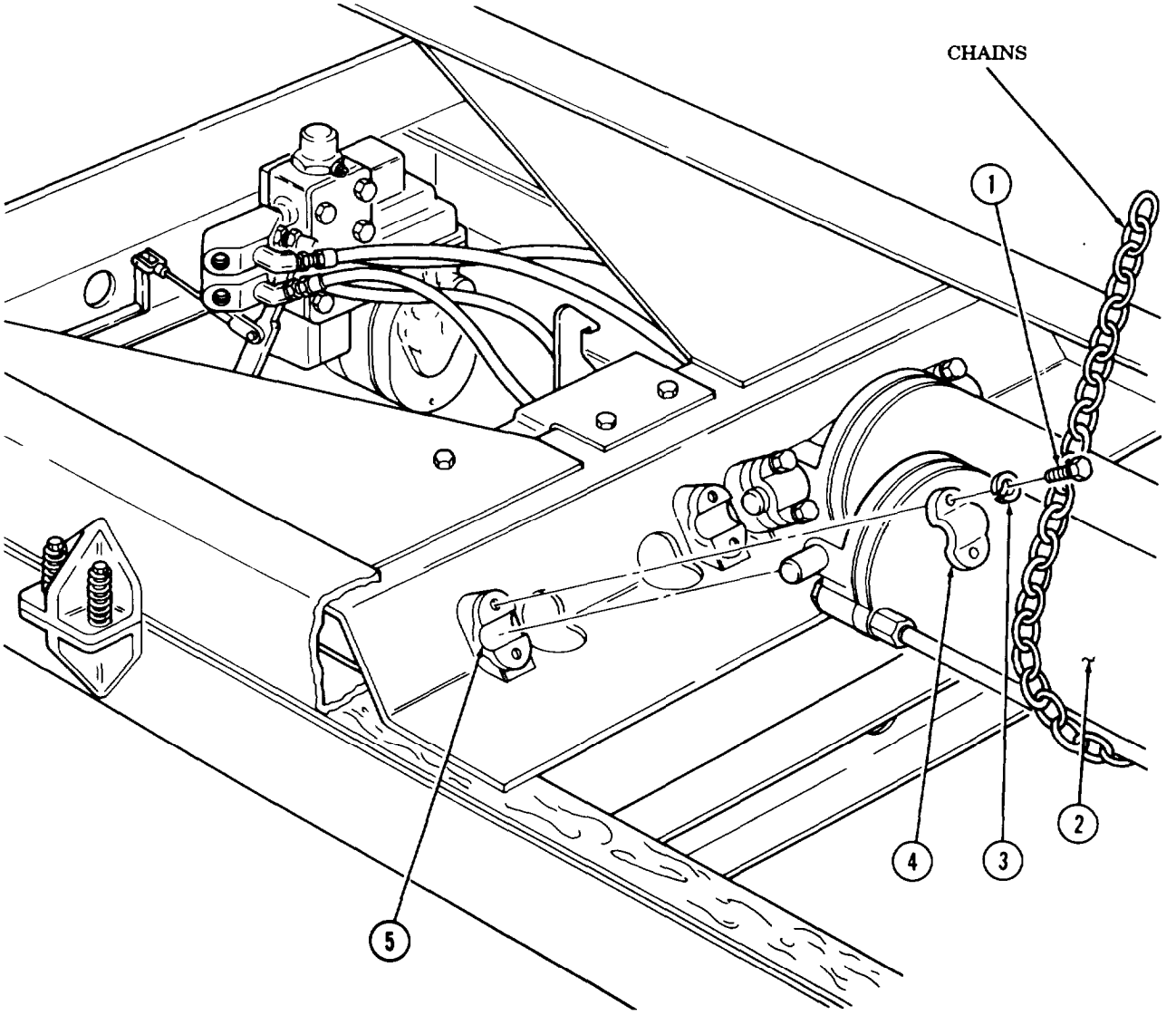

15-15. HOIST CYLINDER MAINTENANCE (Contd)

4. Insert piston rod (11) through hole in crosshead (9) and install with upper crosshead retainer (8), lower crosshead retainer (10), two new lockwashers (7), and screws (6).
5. Remove chains from hoist cylinder (2) and lifting device.
6. Install two hydraulic hoses (12) on hoist cylinder (2).

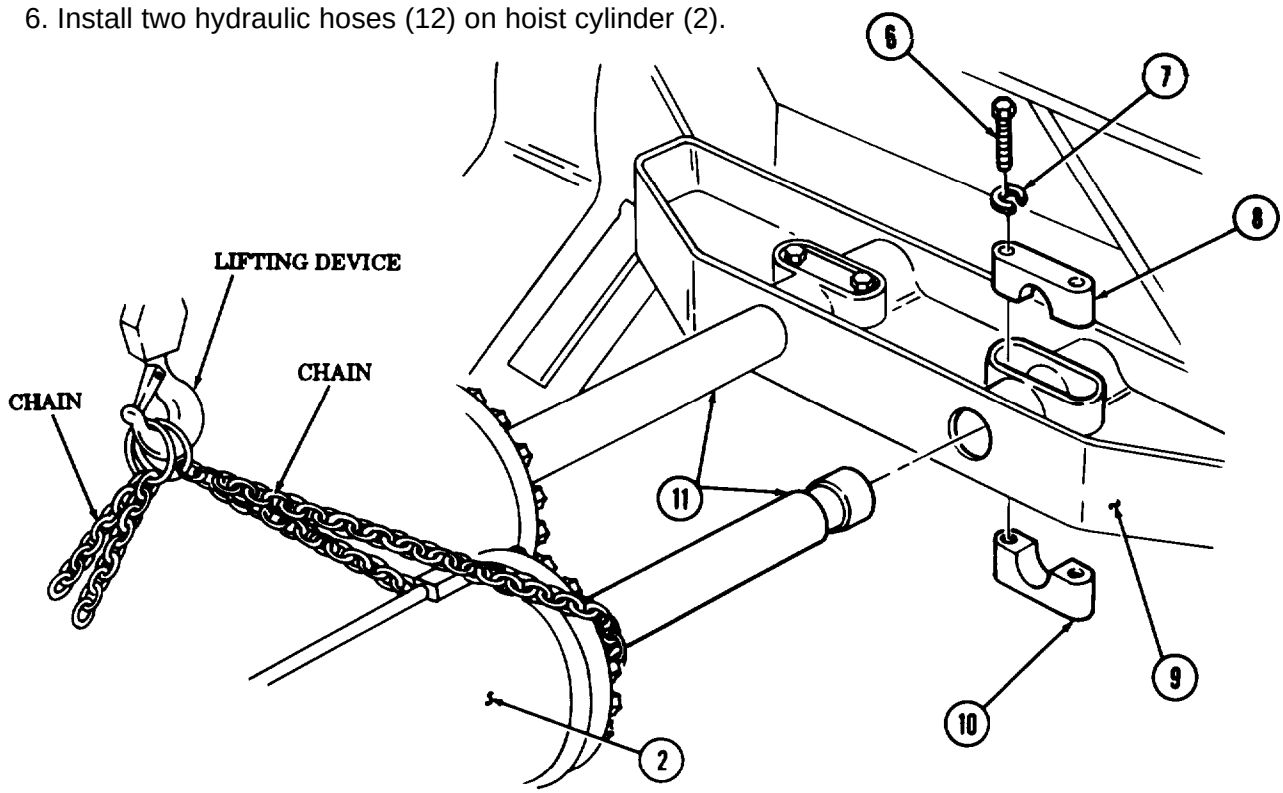

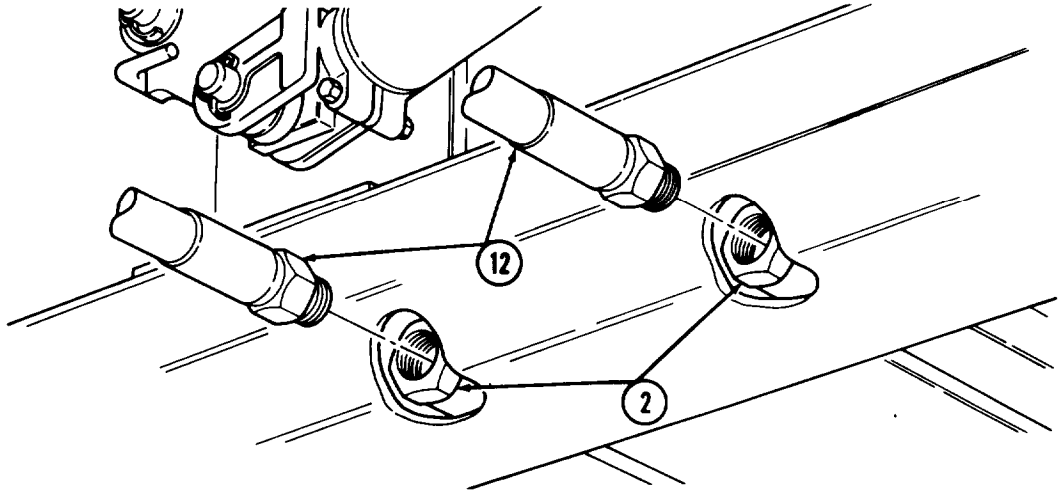

FOLLOW-ON TASKS:
- Install dump roller arms (para. 15-14).
- Fill hydraulic reservoir to proper oil level (LO 9-2320-260-12).
- Start engine (TM 9-2320-260-10) and operate dump body through full range.
- Check for leaks and proper operation (TM 9-2320-260-10).

15-16. HOIST SAFETY LATCH MAINTENANCE

THIS TASK COVERS:

a. Removal
b. Disassembly
c. Cleaning and Inspection
d. Assembly
e. Installation

INITIAL SETUP

APPLICABLE MODELS
M817

TOOLS
General mechanic's tool kit (Appendix B, Item 1)

MATERIALS/PARTS
Two cotter pins (Appendix D, Item 31)
Cotter pin (Appendix D, Item 32)
Five locknuts (Appendix D, Item 169)
No packings (Appendix D, Item 303)
Cap and plug set (Appendix C, Item 6)

REFERENCES (TM)
LO 9-2320-260-12
TM 9-2320-260-10
TM 9-2320-260-34P-2

EQUIPMENT CONDITION
- Dump body removed (para. 15-13).
- Hydraulic reservoir drained (LO 9-2320-260-12).

GENERAL SAFETY INSTRUCTIONS
- Do not operate dump controls when dump body is removed.
- Spring is under tension. Release tension slowly.

WARNING

Do not operate dump controls when dump body is removed. Injury to personnel may result if lift cylinder is operated when not secured.

CAUTION

Cap or plug all openings immediately after disconnecting lines and hoses to prevent contamination, Failure to do so may result in damage to equipment.

NOTE

- Tag hoses for installation.
- Have drainage container ready to catch hydraulic oil.

a. Removal

1. Disconnect two hydraulic hoses (1) from safety latch cylinder (10).
2. Remove two packings (2) from safety latch cylinder (10). Discard packings (2).
3. Remove four locknuts (7), washers (8), screws (3), locknut (6), screw (4), and safety latch assembly (9) from subframe (5). Discard locknuts (7) and (6).

b. Disassembly

1. Remove cotter pin (23) and washer (22) from pin (13). Discard cotter pin (23).

WARNING

Spring is under tension. Release tension slowly. Failure to do so may result in injury to personnel.

2. Slowly release spring (12) and remove pin (13) from mounting bracket (14) and safety hook (11).
3. Remove cotter pin (19), pin (16), and two washers (20) from safety latch cylinder (10) and safety hook (11). Discard cotter pin (19).

15-16. HOIST SAFETY LATCH MAINTENANCE (Contd)

4. Remove safety hook (11) from safety latch cylinder (10) and mounting bracket (14).
5. Remove two lubrication fittings (21) from safety hook (11).
6. Remove cotter pin (18), pin (17), four washers (15), and safety latch cylinder (10) from mounting bracket (14). Discard cotter pin (18).

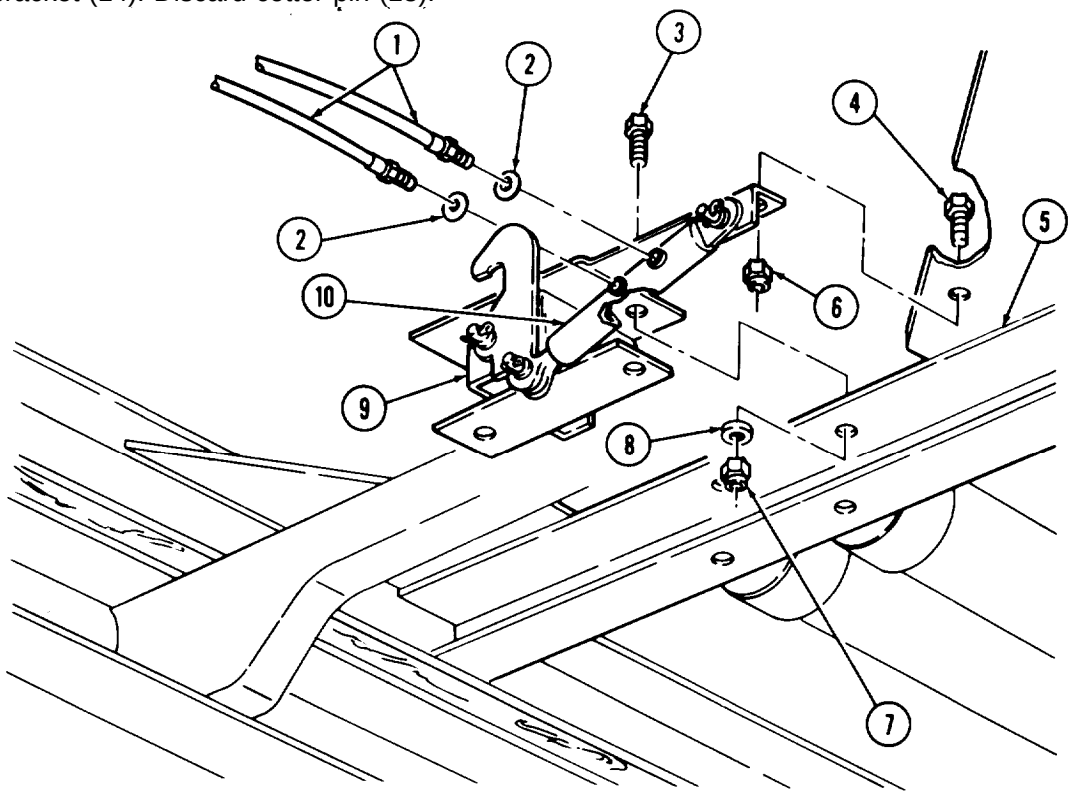

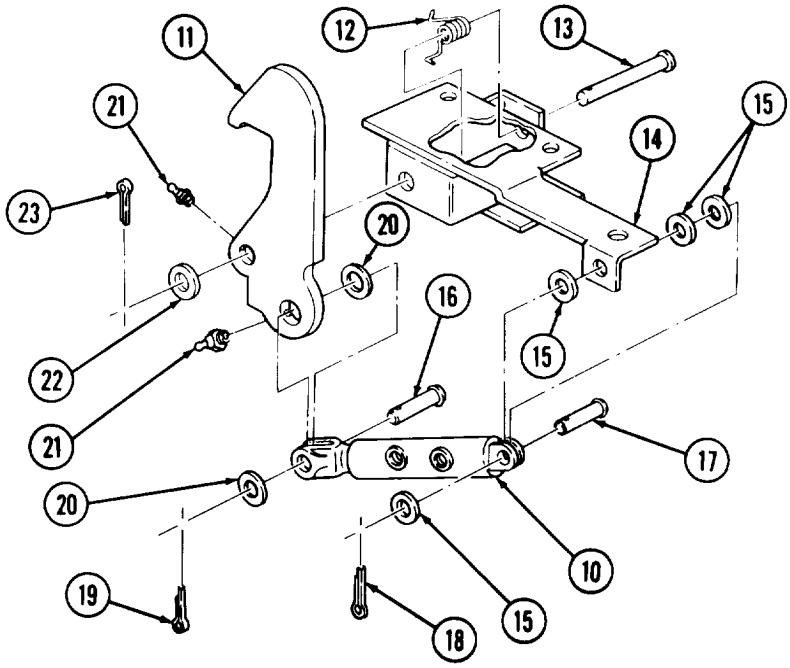

15-16. HOIST SAFETY LATCH MAINTENANCE (Contd)

c. Cleaning and Inspection

1. For general cleaning instructions, refer to para. 2-8.
2. Inspect safety hook (1) for cracks, breaks, and heavily worn areas. Replace safety hook (1) if cracked, broken, or heavily worn.
3. Inspect pins (3), (6), and (7) for bends and cracks. Replace pins (3), (6), or (7) if bent or cracked.
4. Inspect spring (2) for twists, breaks, and collapsed coils. Replace spring (2) if twisted or broken.
5. Inspect safety latch cylinder (8) for twists, cracks, and leaks. Replace safety latch cylinder (8) if twisted, cracked, or leaking.

d. Assembly

1. Install safety latch cylinder (8) on mounting bracket (4) with four washers (5), pin (7), and new cotter pin (9).
2. Install two lubrication fittings (12) on safety hook (1).
3. Install safety hook (1) on mounting bracket (4) with spring (2), pin (3), washer (13), and new cotter pin (14).
4. Install safety hook (1) on safety latch cylinder (8) with washer (11), pin (6), washer (11), and new cotter pin (10).

e. Installation

1. Install mounting bracket (4) and safety latch assembly (23) on subframe (19) with four screws (17), screw (18), four washers (22), new locknuts (21), and new locknut (20).
2. Install two new packings (16) in safety latch cylinder (8).
3. Connect two hydraulic hoses (15) to safety latch cylinder (8)

15-16. HOIST SAFETY LATCH MAINTENANCE (Contd)

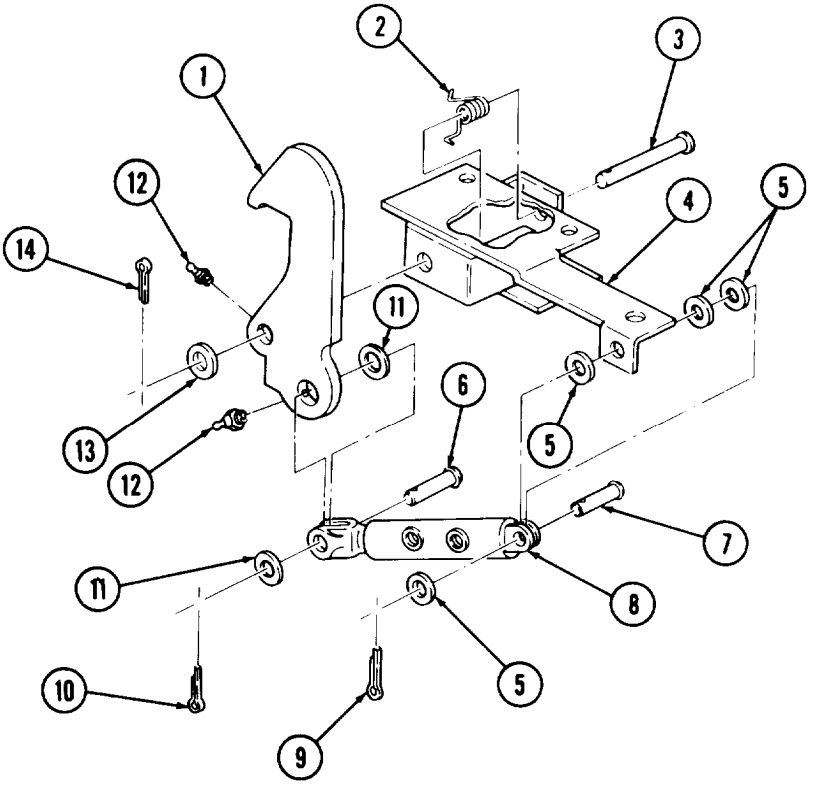

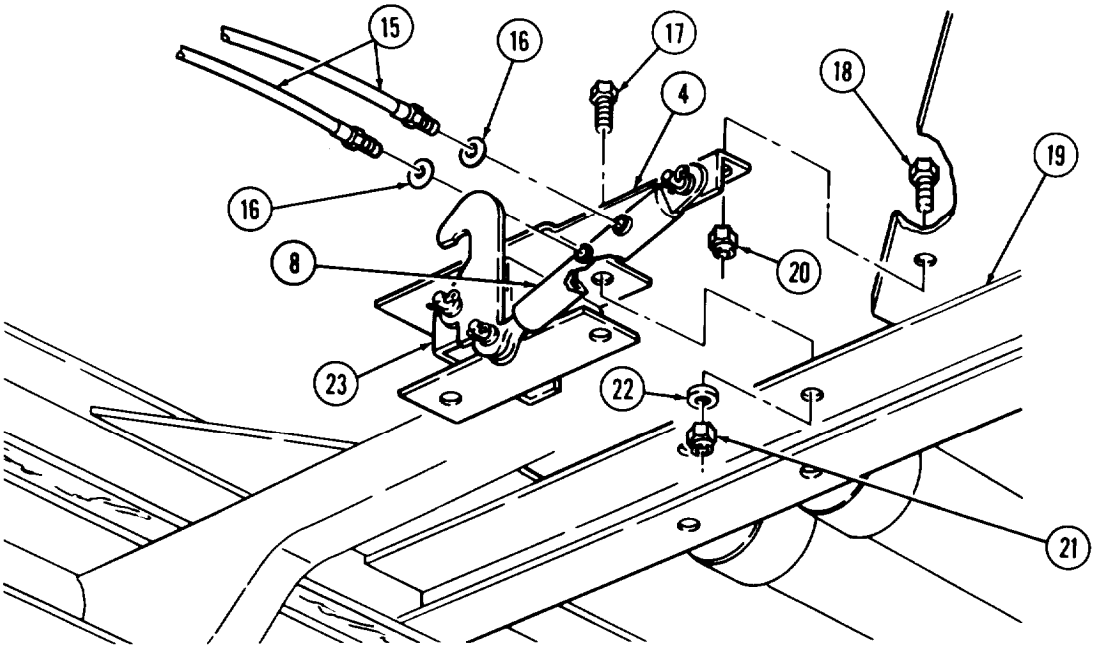

FOLLOW-ON TASKS:
- Install dump body (para. 15-13).
- Fill hydraulic reservoir to proper oil level (LO 9-2320-260-12).
- Start engine (TM 9-2320-260-10) and operate dump body through full range.
- Check for leaks and proper operation (TM 9-2320-260-10).

15-17. HOIST PUMP MAINTENANCE

THIS TASK COVERS:

a. Removal
b. Disassembly
c. Cleaning and Inspection
d. Assembly
e. Installation

INITIAL SETUP

APPLICABLE MODELS
M817

TOOLS
General mechanic's tool kit (Appendix B, Item 1)
Arbor press (Appendix B, Item 7)
Mechanical puller kit (Appendix B, Item 14)

MATERIALS/PARTS
Gasket (Appendix D, Item 62)
Six lockwashers (Appendix D, Item 223)
Oil seal (Appendix D, Item 480)
Woodruff key (Appendix D, Item 551)
Woodruff key (Appendix D, Item 552)

REFERENCES (TM)
LO 9-2320-260-12
TM 9-214
TM 9-2320-260-10
TM 9-2320-260-20
TM 9-2320-260-34 P-2

EQUIPMENT CONDITION
- Power takeoff-to-hydraulic pump propeller shaft removed (TM 9-2320-260-20).
- Hydraulic reservoir drained (LO 9-2320-260-12).

a. Removal

Remove six screws (1), lockwashers (2), pump (5), and gasket (4) from control valve adapter (3). Discard gasket (4) and lockwashers (2).

b. Disassembly

NOTE

Tag front and rear wear plates for installation.

1. Remove woodruff key (20) from shaft (15). Discard woodruff key (20).
2. Remove eight screws (21), washers (20), front cover (19), and front wear plate (16) from pump body (11) and rear cover (6).
3. Using puller, remove two bearings (17) and oil seal (18) from front cover (19). Discard oil seal (18).

CAUTION

Care must be taken when removing shafts and gears to prevent damage to gear teeth.

4. Remove shafts (15) and (23) with gears (13) from pump body (11) and rear cover (6).
5. Using arbor press, remove gears (13) and woodruff key (14) from shafts (15) and (23). Discard woodruff key (14).
6. Remove pump body (11) and rear wear plate (9) from rear cover (6).
7. Using puller, remove two bearings (8) and plug (7) from rear cover (6).

NOTE

Perform step 8 if dowel pins require replacement.

8. Using puller, remove two dowel pins (10) and (12) from pump body (11). Discard dowel pins (10) and (12).

15-17. HOIST PUMP MAINTENANCE (Contd)

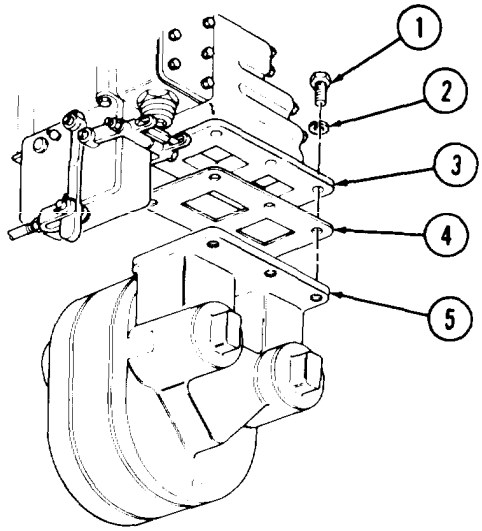

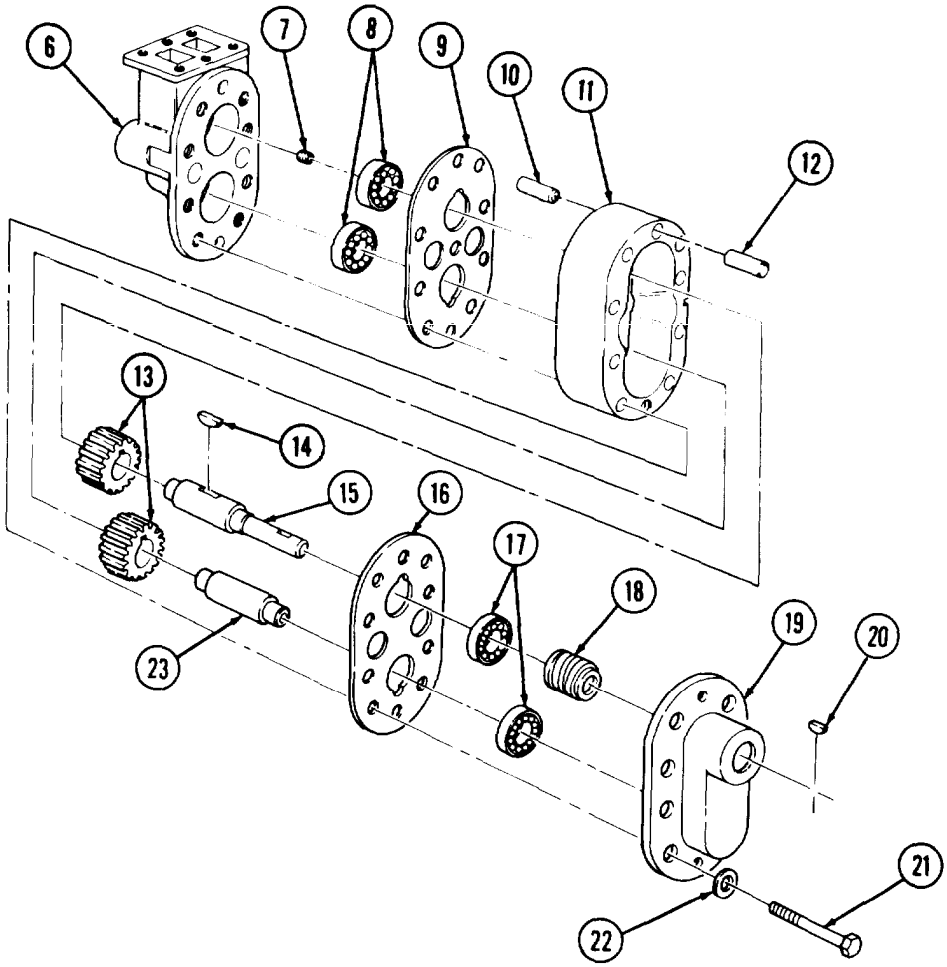

15-17. HOIST PUMP MAINTENANCE (Contd)

c. Cleaning and Inspection

1. For general cleaning instructions, refer to para. 2-8.
2. Inspect front cover (14), rear cover (1), and pump body (6) for cracks and breaks. Replace front cover (14), rear cover (1), or pump body (6) if cracked or broken.
3. Inspect front wear plate (11) and rear wear plate (4) for scores, scratches, nicks, and cracks. Replace front wear plate (11) or rear wear plate (4) if scored, scratched, nicked, or cracked.
4. Inspect two gears (8) for nicks, burrs, or broken teeth. Replace gears (8) if nicked, burred, or teeth are broken.

d. Assembly

NOTE

Notches on front cover, rear cover, and pump body must face left side of vehicle.

1. Using arbor press, install two new dowel pins (5) and (7) on pump body (6).
2. Install plug (2) in rear cover (1).
3. Using arbor press, install two bearings (3) in rear cover (1).
4. Install rear wear plate (4) and pump body (6) on rear cover (1).
5. Install new woodruff key (9) on shaft (10).
6. Using arbor press, install gears (8) on shafts (10) and (18).

CAUTION

Care must be used when installing gears and shafts to prevent damage to gear teeth.

7. Install shafts (10) and (18) with gears (8) in pump body (6) and rear cover (1).
8. Install new oil seal (13) in front cover (14).
9. Using arbor press, install two bearings (12) in front cover (14).
10. Install front wear plate (11) and front cover (14) on pump body (6) and rear cover (1) with eight washers (17) and screws (16).
11. Install new woodruff key (15) on shaft (10).

e. Installation

Install new gasket (22) and pump (23) on control valve adapter (21) with six new lockwashers (20) and screws (19).

15-17. HOIST PUMP MAINTENANCE (Contd)

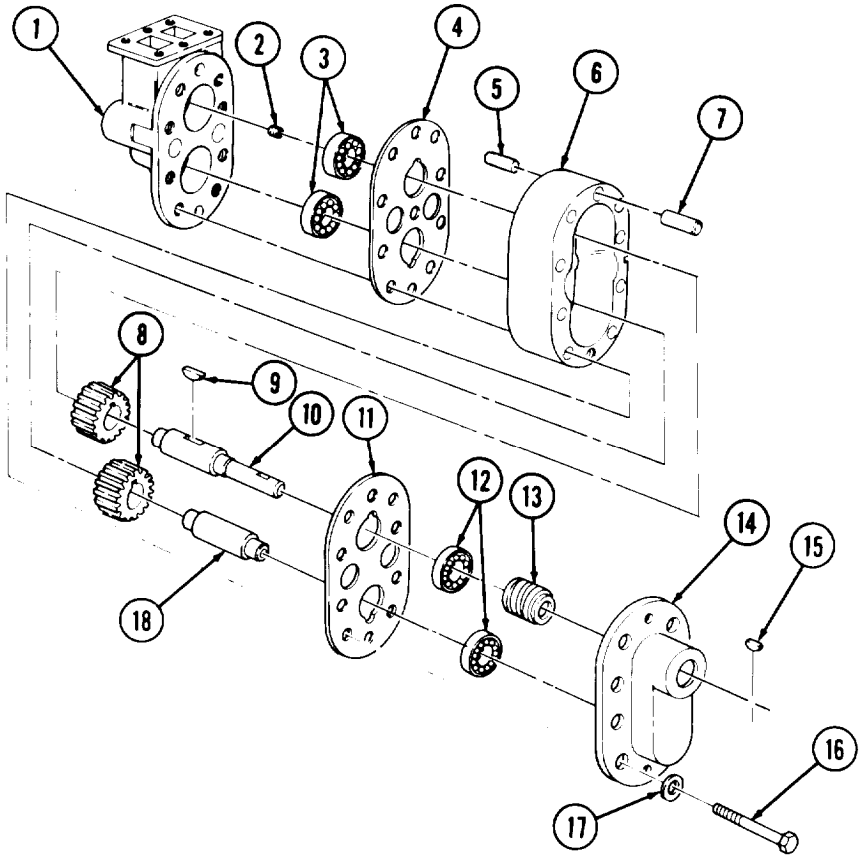

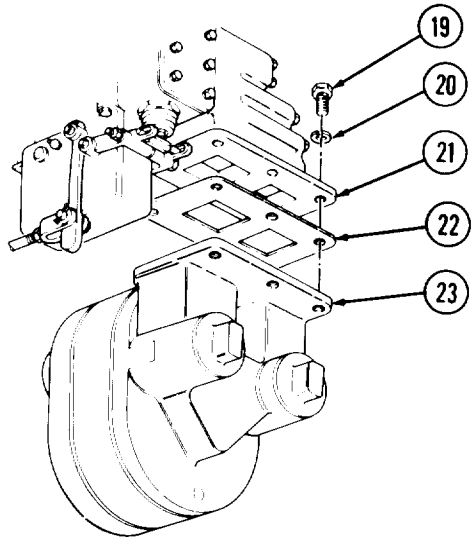

FOLLOW-ON TASKS:
- Install power takeoff-to-hydraulic pump propeller shaft (TM 9-2320-260-20).
- Fill hydraulic reservoir to proper oil level (LO 9-2320-260-12).
- Start engine (TM 9-2320-260-10) and operate dump body through full range.
- Check for leaks and proper operation (TM 9-2320-260-10).

15-18. SUBFRAME REPLACEMENT

THIS TASK COVERS:

a. Removal

b. Installation

INITIAL SETUP

APPLICABLE MODELS
M817

TOOLS
General mechanic's tool kit (Appendix B, Item 1)
Lifting device
Two chains
Two guide lines

MATERIALS/PARTS
Four cotter pins (Appendix D, Item 20)
Eight locknuts (Appendix D, Item 173)

REFERENCES (TM)
TM 9-2320-260-20
TM 9-2320-260-34P-2

EQUIPMENT CONDITION
- Dump body removed (para. 15-13).
- Power takeoff-to-hydraulic pump propeller shaft removed (TM 9-2320-260-20).
- Splash shields removed (TM 9-2320-260-20).

GENERAL SAFETY INSTRUCTIONS
- All personnel must stand clear during lifting operations.
- Ensure lifting capacity is greater than weight of subframe.

a. Removal

1. Remove eight locknuts (4) and screws (6) from subframe mounting plate (3) and frame (5). Discard locknuts (4).
2. Remove four cotter pins (11) from nuts (12) and screws (8). Discard cotter pins (11).
3. Remove four nuts (12), washers (13), screws (8), springs (14), and eight keepers (9) from four subframe mounting brackets (7).
4. Attach two chains to subframe channels (2).
5. Attach lifting device to chains and raise lifting device until slack is removed from chains.
6. Attach two guide lines to subframe (1).

WARNING

- All personnel must stand clear during lifting operations. A swinging or shifting load may cause injury to personnel.
- Ensure lifting capacity is greater than weight (2,700 lb (1,226 kg)) of subframe. Failure to do so may result in injury to personnel or damage to equipment.

NOTE

Two assistants will help with step 7.

7. Raise subframe (1) away from sill (10) and frame (5) and position on supports.
8. Remove two guide lines from subframe (1).
9. Remove chains from subframe channels (2) and lifting device.
10. Remove plug (15), gage (19), spacer (16), and screen (18) from tiller (17) and subframe (1).

15-18. SUBFAME REPLACEMENT (Contd)

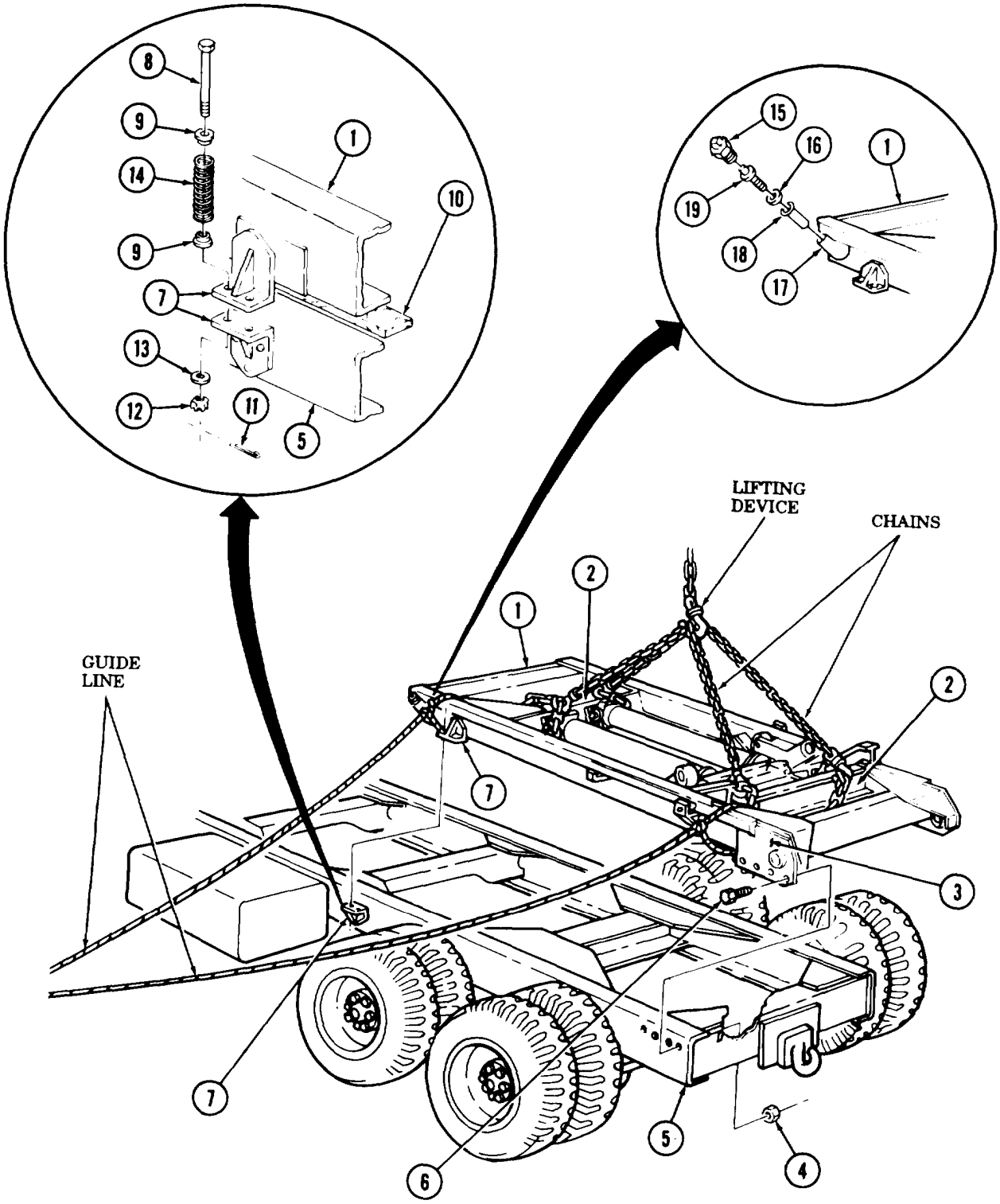

15-18. SUBFRAME REPLACEMENT (Contd)

b. Installation

1. Install screen (18), spacer (16), gage (19), and plug (15) in filler (17) and subframe (1).
2. Attach two chains to subframe channels (2) and lifting device.
3. Attach two guide lines to subframe (1).

WARNING

- All personnel must stand clear during lifting operations. A swinging or shifting load may cause injury to personnel.
- Ensure lifting capacity is greater than weight (2,700 lb (1,226 kg)) of subframe. Failure to do so may result in injury to personnel or damage to equipment.

NOTE

Two assistants will help with step 4.

4. Raise subframe (1) and position onto sill (10) and frame (5). Ensure holes of subframe mounting plates (3) and subframe mounting brackets (7) aline with holes in frame (5).
5. Install subframe (1) on frame (5) with four keepers (9), four springs (14), keepers (9), screws (8), washers (13), and nuts (12).
6. Install four new cotter pins (11) through nuts (12) and screws (8).
7. Install two subframe mounting plates (3) on frame (5) with eight screws (6) and new locknuts (4).
8. Remove two guide lines from subframe (1).
9. Remove chains from subframe channels (2) and lifting device.

15-18. SUBFRAME REPLACEMENT (Contd)

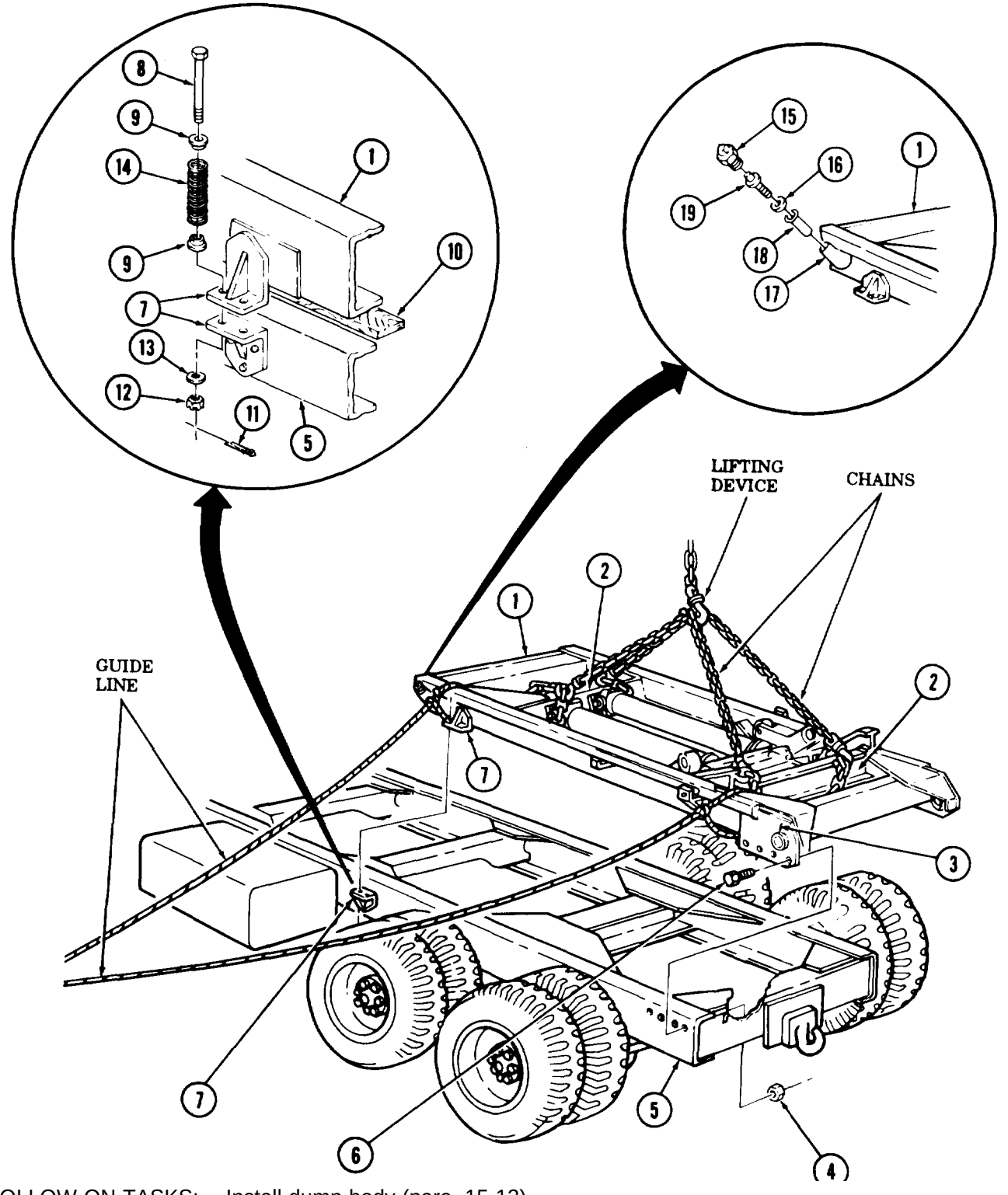

FOLLOW-ON TASKS:
- Install dump body (para. 15-13).
- Install power takeoff-to-hydraulic pump propeller shaft (TM 9-2320-260-20).
- Install splash shields (TM 9-2320-260-20).

15-19. CONTROL VALVE MAINTENANCE

THIS TASK COVERS:

a. Removal
b. Disassembly
c. Cleaning and inspection
d. Assembly
e. Installation

INITIAL SETUP

APPLICABLE MODELS
M817

TOOLS
General mechanic's tool kit (Appendix B, Item 1)

MATERIALS/PARTS
Four spacer rings (Appendix D, Item 519)
Fifteen lockwashers (Appendix D, Item 215)
Two gaskets (Appendix D, Item 94)
Gasket (Appendix D, Item 64)

MATERIALS/PARTS (Contd)
O-ring (Appendix D, Item 285)
Cap and plug set (Appendix C, Item 6)

REFERENCES (TM)
LO 9-2320-260-12
TM 9-2320-260-10
TM 9-2320-260-34P-2

EQUIPMENT CONDITION
- Hydraulic reservoir drained (LO 9-2320-260-12).
- Hoist control box removed (TM 9-2320-260-20).

a. Removal

CAUTION

Clean area around hoses and lines before removal to prevent entry of dirt. Damage wiII occur if dirt or dust enters system.

NOTE

- Tag hoses for installation.
- Have drainage container ready to catch hydraulic oil.
- Cap or plug openings immediately after disconnecting lines and hoses to prevent contamination. Failure to do so may result in damage to equipment. Remove all caps or plugs prior to connection.

1. Disconnect six hoses (1) from four unions (2) and two elbows (4).
2. Remove four unions (2), two elbows (4), and tee (7) from two manifolds (3).
3. Remove drain valve (5) and bushing (6) from tee (7).
4. Remove seven screws (19), lockwashers (20), cover (21), gasket (22), control valve (8), and gasket (9) from mounting bracket (17) and reservoir (16). Discard lockwashers (20) and gaskets (22) and (9).

NOTE

Screws attaching valve head to control valve are of different lengths. Tag all screws for installation.

5. Remove four screws (12), lockwashers (11), two screws (13) and (14), four lockwashers (15), valve head (10), and gasket (18) from control valve (8). Discard lockwashers (11) and (15) and gasket (18).
6. Remove two manifolds (3) from control valve (8).

b. Disassembly

1. Remove plug (23), spacer ring (24), spring (25), and plunger (26) from adapter (31). Discard spacer ring (24).
2. Remove plug (29), spacer ring (30), spring (28) and plunger (27) from adapter (31). Discard spacer ring (30).
3. Remove plug (32), spring (33), and ball (34) from valve cap (35).
4. Remove valve cap (35) and spacer ring (44) from control valve body (36) and spool (43). Discard spacer ring (44).
5. Remove nut (42), trunnion (41), boot (40), plug (39), spacer ring (38), and O-ring (37) from spool (43). Discard O-ring (37) and spacer ring (38).
6. Remove spool (43) from control valve body (36).

15-19. CONTROL VALVE MAINTENANCE (Contd)

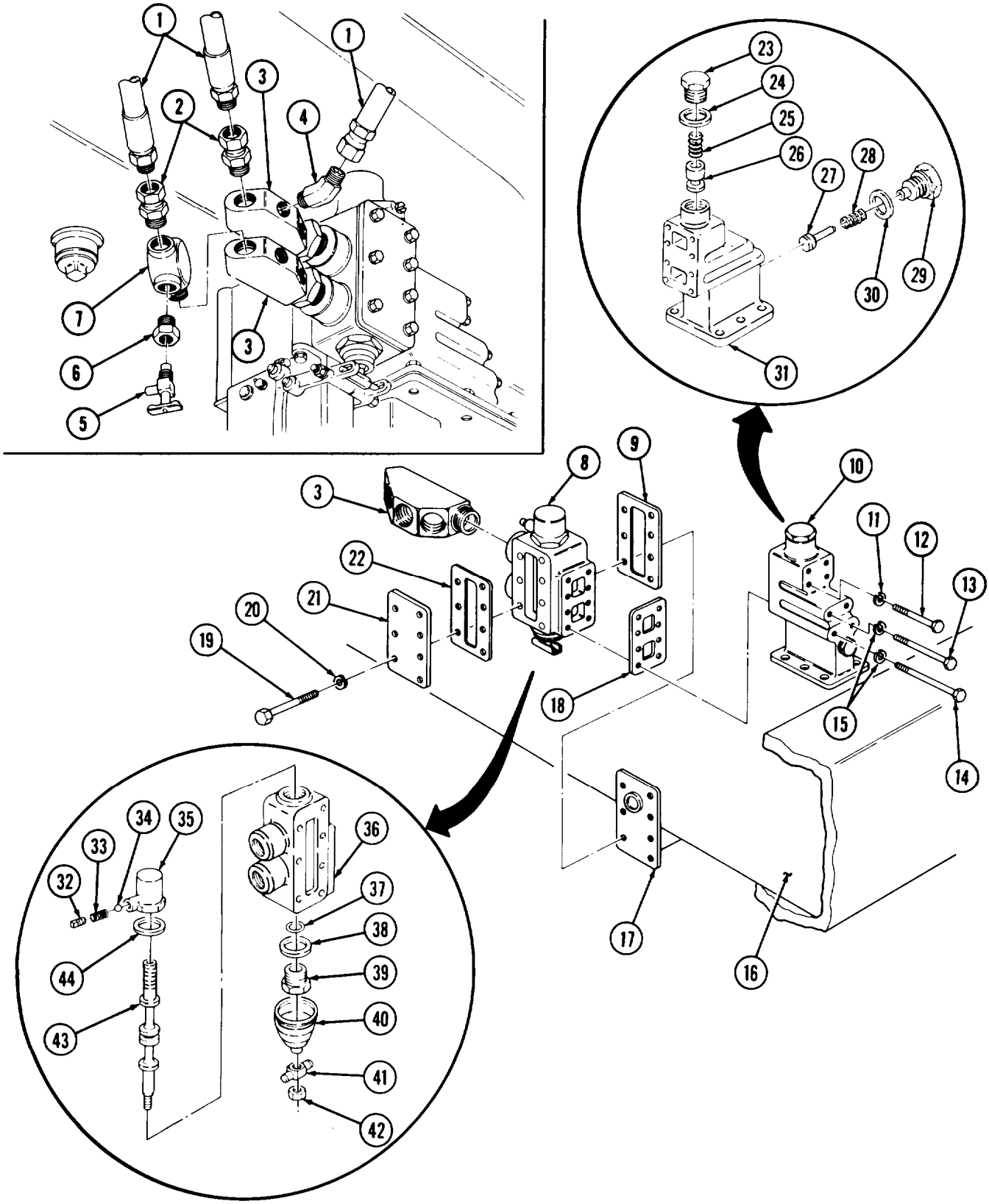

15-19. CONTROL VALVE MAINTENANCE (Contd)

c. Cleaning and Inspection

1. For general cleaning instructions, refer to para. 2-8.
2. Inspect adapter (22) for breaks, cracks, and pitted or worn bores. Replace adapter (22) assembly if broken, cracked, or bores are pitted or worn.
3. Inspect two manifolds (23) for cracks and damaged threads. Replace manifolds (23) if cracked or threads are damaged.
4. Inspect control valve body (5) for cracks, scratches, and worn bore threads. Replace control valve body (5) if cracked, scratched, or bore threads are worn,
5. Inspect spool (12) for scratches, nicks, and burrs. Replace spool (12) if scratched, nicked, or burred.

d. Assembly

1. Install spool (12) in control valve body (5).
2. Install new spacer ring (13) and valve cap (4) on control valve body (5) and spool (12).
3. Install ball (3), spring (2), and plug (1) in valve cap (4).
4. Install new O-ring (6), new spacer ring (7), plug (8), boot (9), trunnion (10), and nut (11) on spool (12).
5. install plunger (18), spring (19), new spacer ring (21), and plug (20) on adapter (22).
6. Install plunger (17), spring (16), new spacer ring (15), and plug (14) on adapter (22).

e. Installation

1. Install two manifolds (23) on control valve (24).
2. Install new gasket (34) and valve head (26) on control valve (24) with four new lockwashers (27), screws (28), four new lockwashers (31), and two screws (29) and (30).
3. Install new gasket (34), control valve (24), new gasket (38) and cover (37) on mounting bracket (33) and reservoir (32) with seven new lockwashers (36) and screws (35).
4. Install bushing (43) and drain valve (42) on tee (44).
5. Install tee (44), two elbows (41), and four unions (40) on two manifolds (23).
6. Connect six hoses (39) on four unions (40) and two elbows (41).

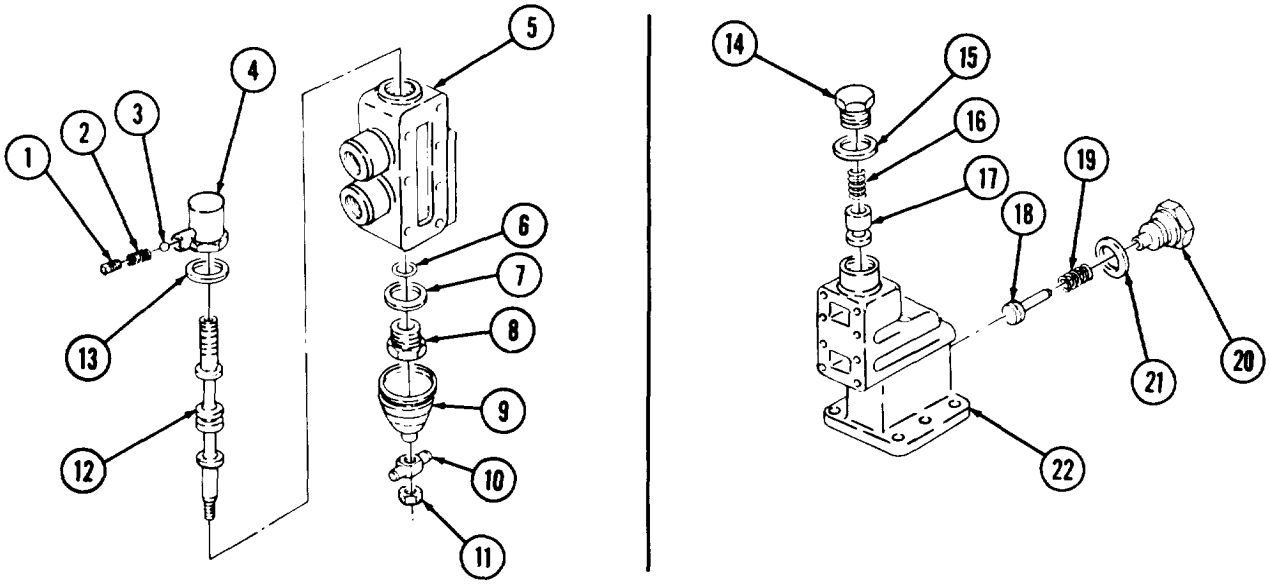

15-19. CONTROL VALVE MAINTENANCE (Contd)

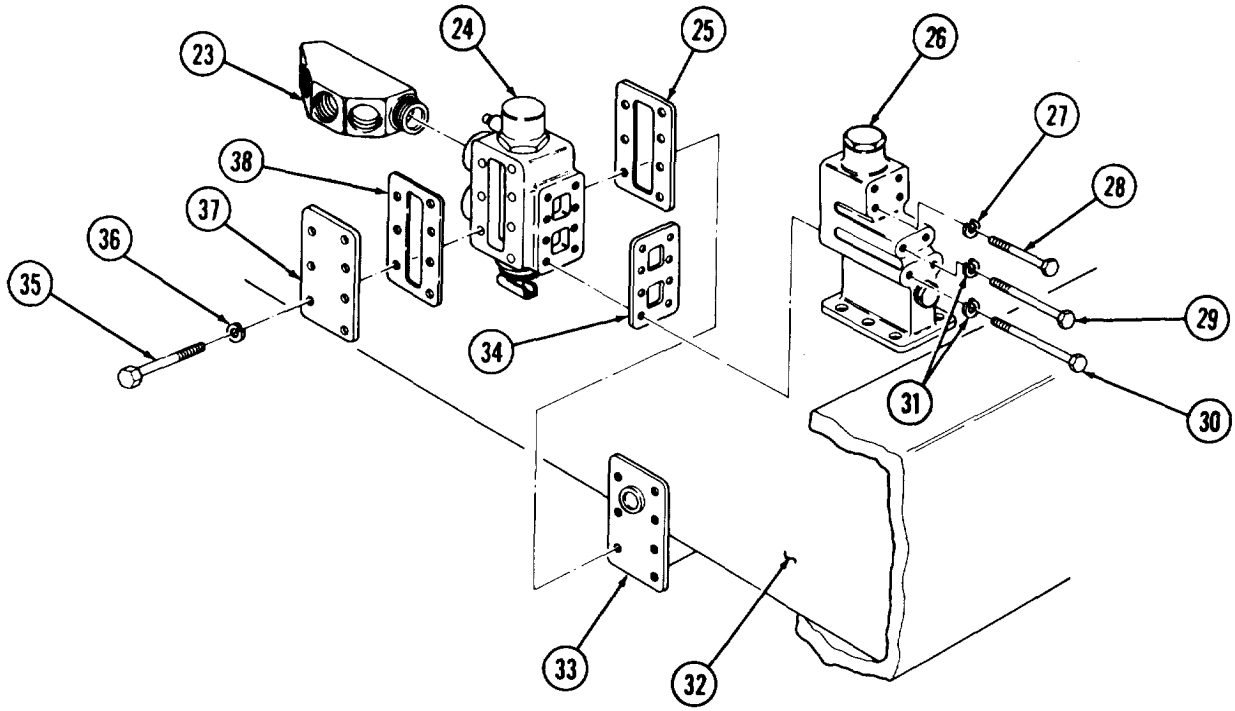

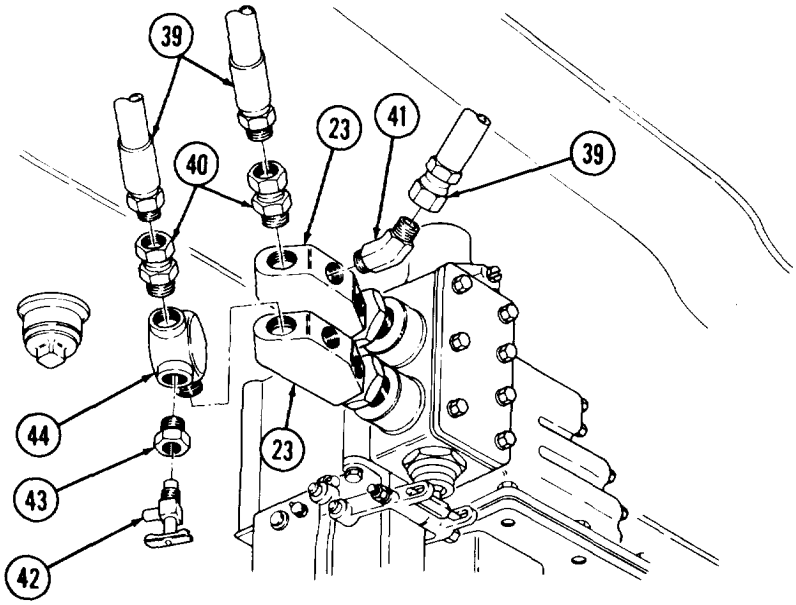

FOLLOW-ON TASKS:
- Install hoist control box (TM 9-2320-260-20).
- Fill hydraulic reservoir to proper oil lever (LO 9-2320-260-12).
- Start engine (TM 9-2320-260-10) and operate dump body through full range.
- Check for leaks and proper operation (TM 9-2320-260-10).

15-20. HYDRAULIC HOSES REPLACEMENT

THIS TASK COVERS:

a. Removal b. Installation

INITIAL SETUP

APPLICABLE MODELS
M817

TOOLS
General mechanic's tool kit (Appendix B, Item 1)
Lifting device
Chain

MATERIALS/PARTS
Cap and plug set (Appendix C, Item 6)
Antiseize tape (Appendix C, Item 50)

REFERENCES (TM)
LO 9-2320-260-12
TM 9-2320-260-10
TM 9-2320-260-34P-2

EQUIPMENT CONDITION
- Parking brake set (TM 9-2320-260-10).
- Hydraulic reservoir drained (LO 9-2320-260-12).

GENERAL SAFETY INSTRUCTIONS
- Position safety braces before working under raised dump body.
- All personnel must stand clear during lifting operations.
- Ensure lifting capacity is greater than weight of dump body.

WARNING

- Never work under raised dump body until safety braces are properly positioned. Injury to personnel may result if dump body suddenly lowers.
- All personnel must stand clear during lifting operations. A swinging or shifting load may cause injury to personnel.
- Ensure lifting capacity is greater than weight (2,700 lb (1,226 kg)) of dump body. Failure to do so fray result in injury to personnel or damage to equipment.

CAUTION

Cap or plug all openings immediately after disconnecting lines or hoses to prevent contamination. Remove plugs prior to connection. Failure to do so may result in damage to hydraulic system.

a. Removal

1. Install chain on cab protector (1) and lifting device.

NOTE

Assistant will help with step 2.

2. Raise dump body (2) and position on two safety braces (3).
3. Remove chain from dump body (2) and lifting device.

15-20. HYDRAULIC HOSES REPLACEMENT (Contd)

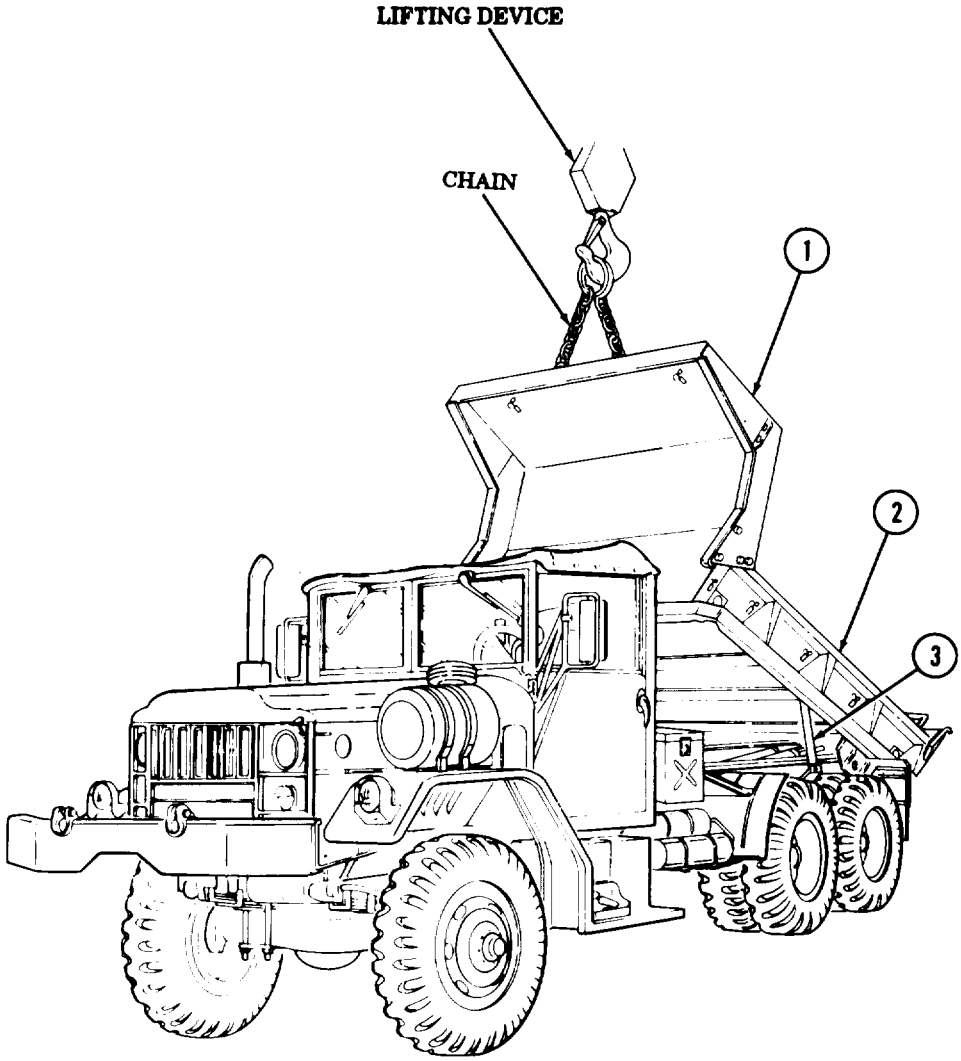

15-20. HYDRAULIC HOSES REPLACEMENT (Contd)

NOTE

- Tag hoses for installation.
- Have drainage container ready to catch hydraulic oil.

4. Remove two hoses (6) from two elbows (5).
5. Remove two hoses (6) from safety latch cylinder (12).
6. Remove three hoses (2) from three unions (3) in ports of upper manifold (4) and lower manifold (7).
7. Remove two hoses (1) and (2) from two hoist cylinders (13).
8. Remove two elbows (5) from center ports of upper manifold (4) and lower manifold (7).
9. Remove three unions (3) from upper manifold (4) and lower manifold (7).

NOTE

Steps 10 through 13 apply to hydraulic hose connected to lower manifold and left hoist cylinder.

10. Remove hose (1) from union (11) and hoist cylinder (13).
11. Remove union (11) from tee (10).
12. Remove valve cock (8) and bushing (9) from tee (10).
13. Remove tee (10) from lower manifold (7).

b. Installation

NOTE

Steps 2 through 5 apply to hydraulic hose connected to lower manifold and left hoist cylinder.

1. Wrap hoses (1) and (2), unions (3) and (11), tee (10), bushing (9), valve cock (8), and elbows (5).
2. Install tee (10) in port of lower manifold (7).
3. Install bushing (9) and valve cock (8) in tee (10).
4. Install union (11) in tee (10).
5. Install hose (1) on union (11) and hoist cylinder (13).
6. Install two elbows (5) in center ports of upper manifold (4) and lower manifold (7).
7. Install three unions (3) in remaining ports of upper manifold (4) and lower manifold (7).
8. Install two hoses (1) and (2) on two hoist cylinders (13).
9. Install three hoses (2) on three unions (3).
10. Install two hoses (6) on safety latch cylinder (12).
11. Install two hoses (6) on two elbows (5).

15-20. HYDRAULIC HOSES REPLACEMENT (Contd)

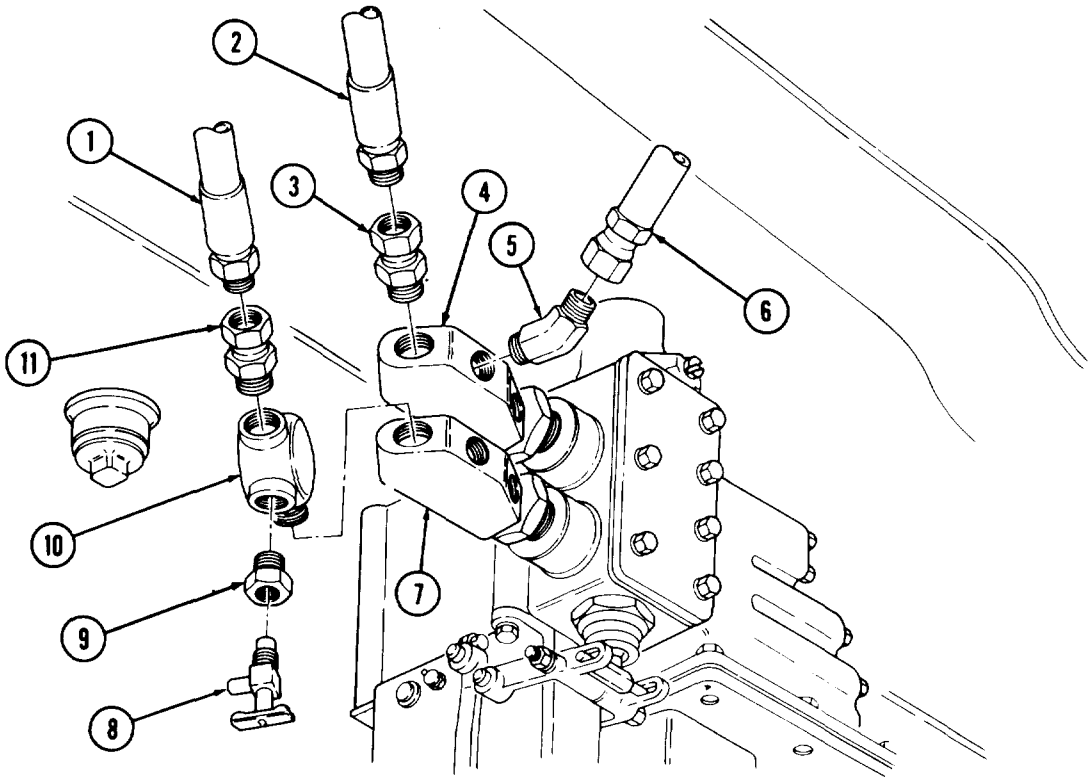

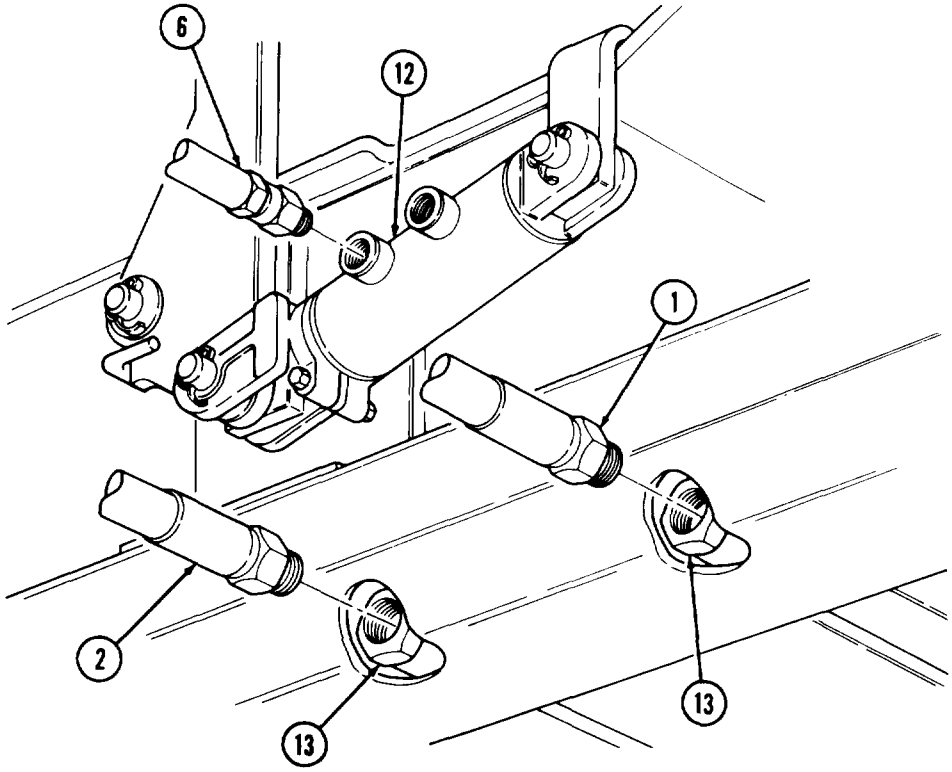

15-20. HYDRAULIC HOSES REPLACEMENT (Contd)

12. Install chain on cab protector (1) and lifting device.

WARNING

- Never work under raised dump body until safety braces are properly positioned. Injury to personnel may result if dump body suddenly lowers.
- All personnel must stand clear during lifting operations. A swinging or shifting load may cause injury to personnel.
- Ensure lifting capacity is greater than weight (2,700 lb (1,226 kg)) of dump body. Failure to do so may result in injury to personnel or damage to equipment.

NOTE

Assistant will help with steps 12 and 13.

13. Raise dump body (2) and lower onto two safety braces (3).
14. Lower dump body (2) and remove chain from cab protector (1) and lifting device.

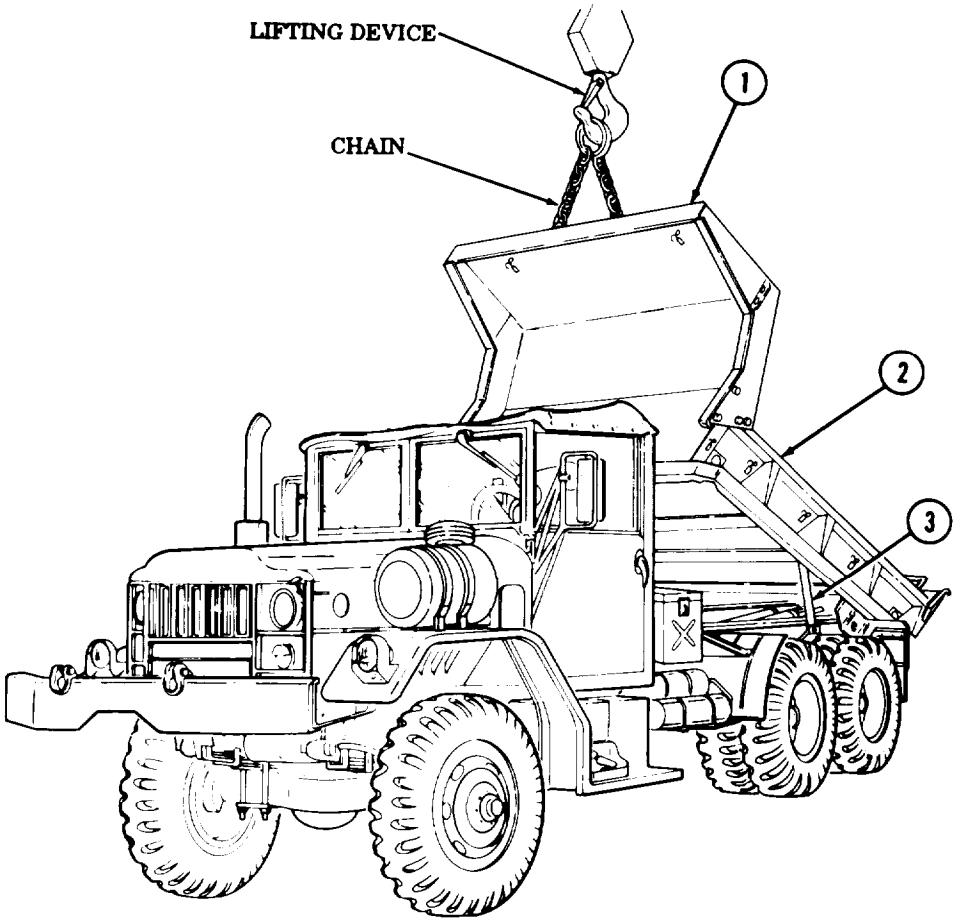

FOLLOW-ON TASKS:
- Fill hydraulic reservoir to proper oil level (LO 9-2320-260-12).
- Start engine (TM 9-2320-260-10) and operate dump body through full range.
- Check for leaks and proper operation (TM 9-2320-260-10).

15-21. SAFETY BRACE REPLACEMENT

THIS TASK COVERS:

a. Removal

b. Installation

INITIAL SETUP

APPLICABALE MODELS
M817

MATERIAIS/PARTS
General mechanic's tool kit
(Appendix B, Item 1)

MATERIALS/PARTS
Lockwasher (Appendix D, Item 224)

REFERENCES (TM)
TM 9-2320-260-10
TM 9-2320-260-34 P-1

EQUIPMENT CONDITION
- Parking brake set (TM 9-2320-260-10).
- Dump body in lowered position (TM 9-2320-260-10).

a. Removal

1. Remove nut (4), lockwasher (3), and screw (6) from hinge pin (1) and bracket (2). Discard lockwasher (3).
2. Using punch and hammer, remove hinge pin (1) from bracket (2).
3. Remove safety brace (5) from bracket (2).

b. Installation

1. Position safety brace (5) in bracket (2) with hinge pin (1) hole alined with hole in bracket (2),
2. Insert hinge pin (1) in bracket (2) through safety brace (5) and install with screw (6), new lockwasher (3), and nut (4).

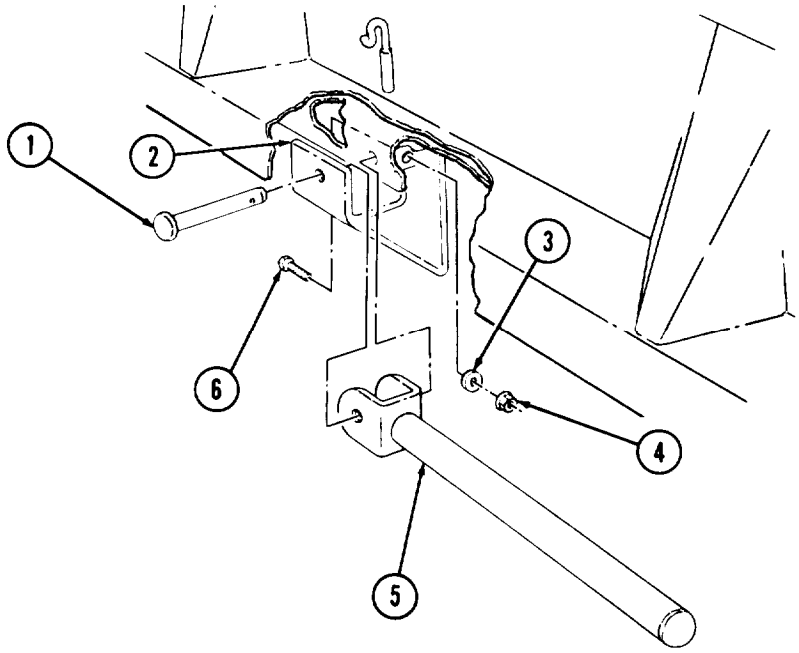

Section V. VAN BODY MAINTENANCE

15-22. DESCRIPTION AND DATA - VAN BODY

The M820, M820A1, and M820A2 are expansible van body models used for maintenance, electrical, supply, power, and base station operations. The main difference between these models is that the M820A2 expansible van has a hydraulic liftgate. Further information and tabulated data on M820, M820A1, and M820A2 expansible vans can be found in TM 9-2320-260-10.

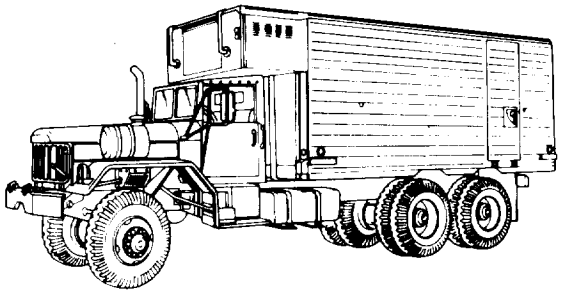

M820 AND M820A1 VAN BODIES

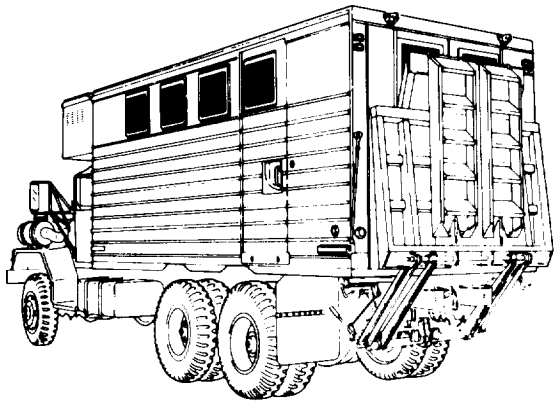

M820A2 VAN BODY (WITH LIFTGATE)

15-23. VAN BODY COMPONENTS MAINTENANCE INDEX

PARA. NO.	TITLE	PAGE NO.
15-24.	Van Body Maintenance	15-72
15-25.	Retractable Beam Driveshaft and Lock Maintenance	15-76
15-26.	Retractable Beam Replacement	15-80
15-27.	Retractable Beam Rollers Replacement	15-82
15-28.	Rear Doors Maintenance	15-86
15-29.	Side Doors Maintenance	15-95
15-30.	Underframe Repair	15-100
15-31,	Hinged Floor Maintenance	15-102
15-32.	Exterior Side Panel Maintenance	15-106
15-33.	Hinged End Panel Maintenance	15-113
15-34.	Rear Wall Interior Panels Replacement	15-118
15-35.	Interior Side Panels and Latches Replacement	15-120
15-36.	Ceiling and Frame Maintenance	15-131
15-37.	Hinged Roof Maintenance	15-140
15-38.	Ceiling Registers and Deflectors Replacement	15-154
15-39.	Front Wall Register Replacement	15-156

15-23. VAN BODY COMPONENTS MAINTENANCE INDEX (Contd)

PARA. NO.	TITLE	PAGE NO.
15-40.	Ceiling Rear Cover Replacement (M820A1)	15-157
15-41.	Ceiling Rear Cover Replacement (M820, M820A2)	15-158
15-42.	Ceiling Transition Maintenance (M820, M820A2)	15-160
15-43.	Ceiling Transition Maintenance (M820A1)	15-164
15-44.	Ceiling Filler and Side Panels Replacement	15-166
15-45.	Ceiling Air Ducts and Supports Maintenance	15-168
15-46.	Bonnet Frame Repair	15-172
15-47.	Bonnet Access Door Maintenance	15-178
15-48.	Bonnet Door Maintenance	15-182
15-49.	Air Conditioner Replacement	15-188
15-50.	Liftgate Replacement (M820A2)	15-196
15-51.	Liftgate Platform and Hinge Plate Maintenance (M820A2)	15-200
15-52.	Liftgate Lift Frame Maintenance (M820A2)	15-204
15-53.	Liftgate Main Frame Maintenance (M820A2)	15-206
15-54.	Liftgate Clutches Replacement (M820A2)	15-208
15-55.	Liftgate Control Linkage Maintenance (M820A2)	15-210
15-56.	Liftgate Auxiliary Pump and Bracket Replacement (M820A2)	15-214
15-57.	Liftgate Hydraulic Tubing Replacement (M820A2)	15-216
15-58.	Liftgate Control Valve Replacement (M820A2)	15-224
15-59.	Liftgate Cylinder Maintenance (M820A2)	15-226
15-60.	Liftgate Closing Cylinders Maintenance (M820A2)	15-230
15-61.	Liftgate Hydraulic Pump Replacement (M820A2)	15-234
15-62.	Liftgate Pump Oil Tank Replacement (M820A2)	15-236

15-24. VAN BODY MAINTENANCE

THIS TASK COVERS:

a. Removal
b. Inspection
c. Installation

INITIAL SETUP

APPLICABLE MODELS
M820, M820A1, M820A2

TOOLS
General mechanic's tool kit (Appendix B, Item 1)
Rivet gun (Appendix B, Item 120)
Lifting device
Two chains
Two guide lines
Wooden supports

MATERIALS/PARTS
Twelve locknuts (Appendix D, Item 193)
Ten locknuts (M820, M820A2) (Appendix D, Item 177)
Eight locknuts (Appendix D, Item 192)
Eight rivets (Appendix D, Item 366)

PERSONNEL REQUIRED
Three

REFERENCES (TM)
TM 9-2320-260-10
TM 9-2320-260-34P-2

EQUIPMENT CONDITION
- Parking brake set (TM 9-2320-260-10).
- Ladders removed (TM 9-2320-260-10).
- Liftgate removed (M820A2) (para. 15-50).

GENERAL SAFETY INSTRUCTIONS
- All personnel must stand clear during lifting operations.
- Ensure lifting, capacity is greater than weight of van body.
- Support capacity must be greater than the weight of van body.

NOTE

M820, M820A1, and M820A2 van bodies are maintained the same except where noted.

a. Removal

1. Remove four locknuts (23), screws (17), washers (18), springs (19), and springs (20) from two frame brackets (22) and van body (2). Discard locknuts (23).
2. Remove eight locknuts (5) and screws (11) from two frame brackets (8), frame brackets (15), and van body (2). Discard locknuts (5).

NOTE

Perform step 3 for M820 and M820A2 vehicles.

3. Remove ten locknuts (3) and bevel washers (4) from van body (2). Discard locknuts (3).
4. Install chains to four lifting brackets (1) and lifting device.
5. Attach guide lines to van body (2).

WARNING

- All personnel must stand clear during lifting operations. A shifting or swinging load may result in injury to personnel.
- Ensure lifting capacity is greater than weight (9,055 lb (4,111 kg)) of van body. Failure to do so may result in injury to personnel or damage to equipment.
- Support capacity must be greater than weight of van body. Ensure support capacity is not less than 9,055 lb (4,111 kg). Failure to do so may result in injury to personnel or damage to equipment.

15-24. VAN BODY MAINTENANCE (Contd)

NOTE

Two assistants will help with lifting operations.

6, Raise van body (2) from frame (10).

NOTE

- Perform step 7 for M820 and M820A2 vehicles.
- Perform step 8 for M820A1 vehicles.

7. Remove four blocks (6), ten screws (13), washers (14), and four sills (7) from van body (2).
8. Remove four blocks (6) and sills (7) from frame (10).
9. Remove van body (2) from frame (10) and lower onto wooden supports.
10. Remove lifting device and chains from lifting brackets (1).
11. Remove guide lines from van body (2).

NOTE

Perform steps 12 and 13 if frame brackets are damaged.

12. Remove eight locknuts (9), four screws (12), screws (16), two frame brackets (8), and frame brackets (15) from frame (10). Discard locknuts (9).
13. Remove eight rivets (21) and two frame brackets (22) from frame (10). Discard rivets (21).

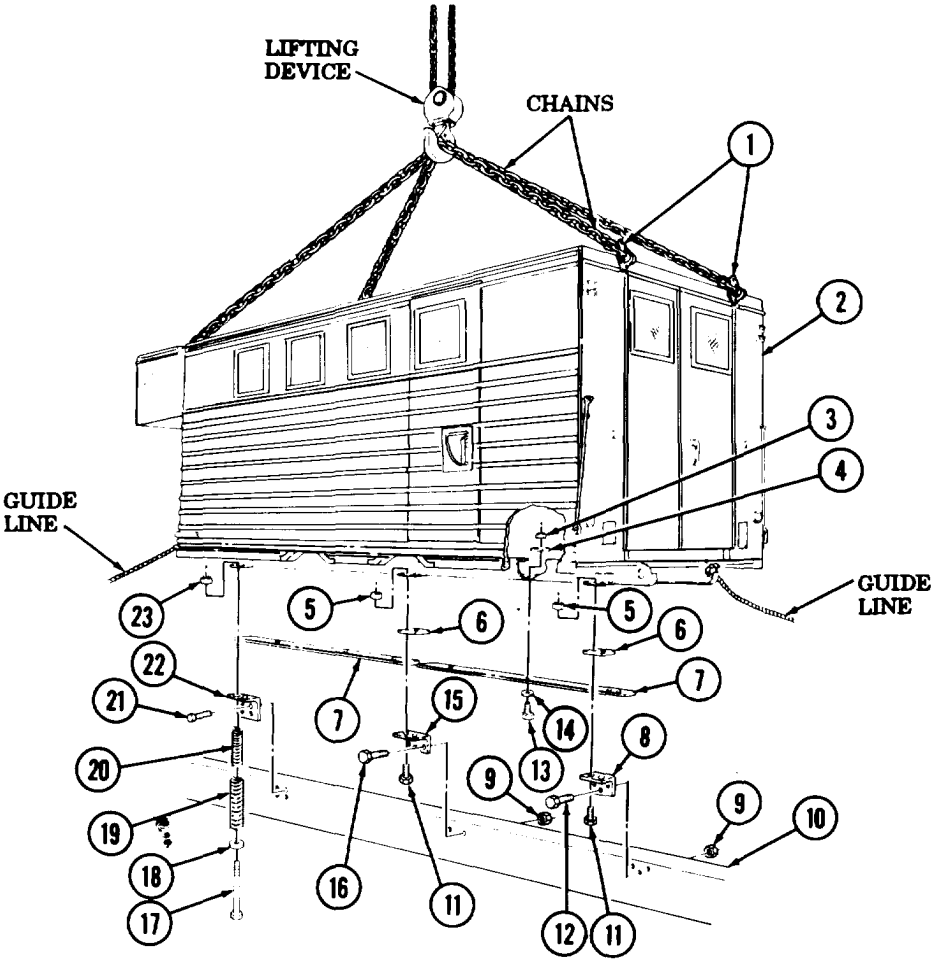

15-24. VAN BODY MAINTENANCE (Contd)

b. Inspection

Inspect sills (7) and blocks (6) for breaks, cracks, and rotting. Replace sills (7) or blocks (6) if broken, cracked, or rotten.

c. Installation

NOTE

Perform steps 1 and 2 if frame brackets were removed.

1. Install two frame brackets (22) on frame (10) with eight new rivets (21).
2. Install two frame brackets (15) and frame brackets (8) on frame (10) with four screws (16). screws (12), and eight new locknuts (9).
3. Attach chains on four lifting brackets (1) and lifting device.
4. Attach guide lines to van body (2).

WARNING

- All personnel must stand clear during lifting operations. A swinging or shifting load may result in injury to personnel.
- Ensure lifting capacity is greater than weight (9,055 lb (4,111 kg)) of van body. Failure to do so may result in damage to equipment or injury to personnel.

NOTE

- Perform step 5 for M820 and M820A2 vehicles.
- Perform step 6 for M820A1 vehicles.
- Two assistants will help with lifting operations.

5. Raise van body (2) from wooden supports and install four sills (7) on van body (2) with ten washers (14), screws (13), bevel washers (4), and new locknuts (3).
6. Position four sills (7) on frame (10).
7. Position four blocks (6) on frame brackets (8) and (15).
8. Raise van body (2) and position over frame (10). Aline holes of frame brackets (8),(15), and (22) with van body (2) and lower van body (2) on frame (10).
9. Install van body (2) on two frame brackets (15) and frame brackets (8) with eight screws (11) and new locknuts (5).
10. Install van body (2) on two frame brackets (22) with four springs (20), springs (19). washers (18), screws (17), and new locknuts (23).
11. Remove lifting device and chains from four lifting brackets (1).
12. Remove guide lines from van body (2).

15-24. VAN BODY MAINTENANCE (Contd)

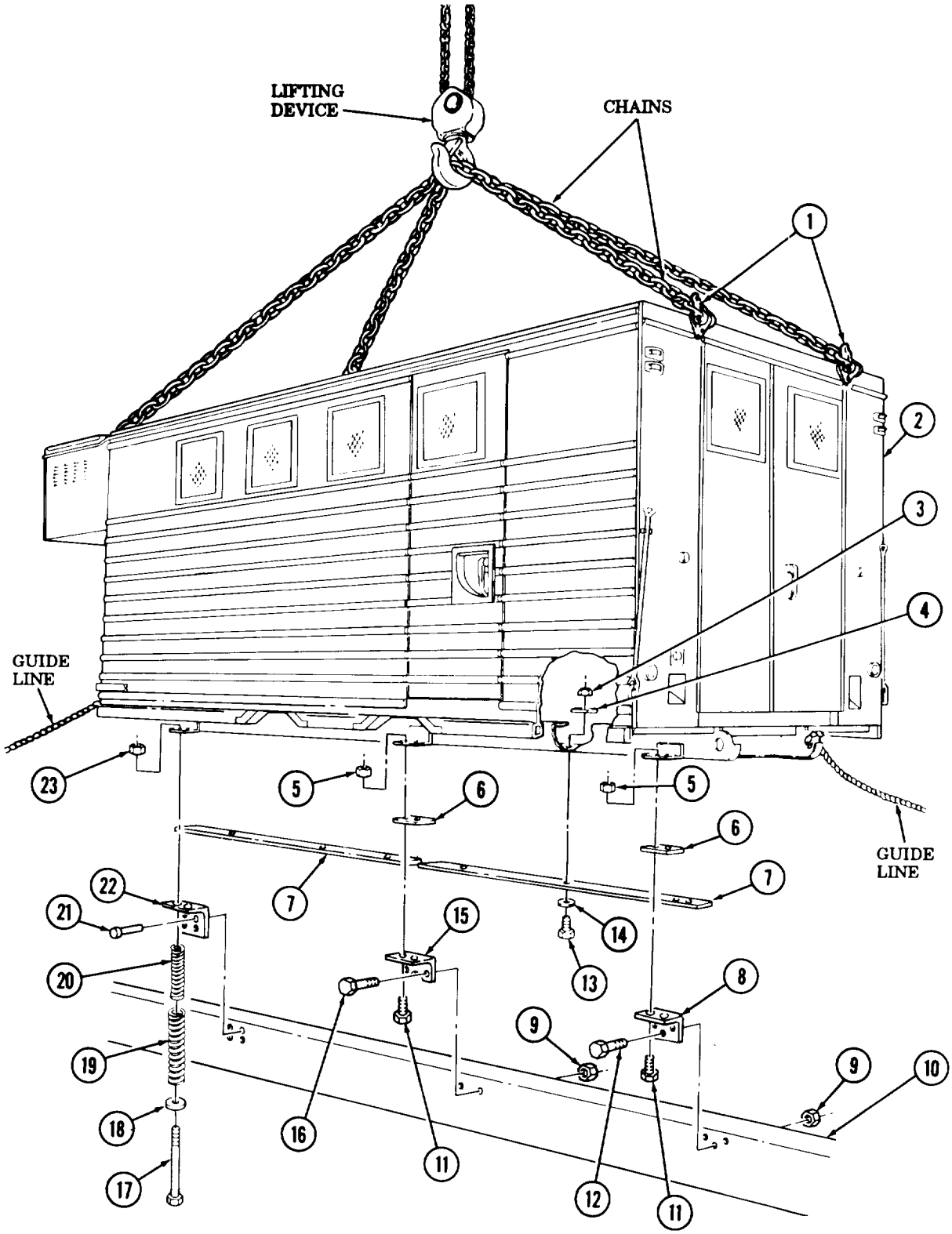

FOLLOW-ON TASKS: • Install liftgate (M820A2) (para. 15-50).
• Install ladders (TM 9-2320-260-10).

15-25. RETRACTABLE BEAM DRIVESHAFT AND LOCK MAINTENANCE

THIS TASK COVERS:

a. Removal
b. Cleaning and Inspection
c. Installation

INITIAL SETUP

APPLICABLE MODELS
M820, M820A1, M820A2

TOOLS
General mechanic's tool kit (Appendix B, Item 1)

MATERIALS/PARTS
Five woodruff keys (Appendix D, Item 560)
Locknut (Appendix D, Item 194)
GAA grease (Appendix C, Item 14)
Lubricating oil (Appendix C, Item 21)
Emery cloth (Appendix C, Item 8)

REFERENCES (TM)
TM 9-2320-260-10
TM 9-2320-260-34P-2

EQUIPMENT CONDITION
Parking brake set (TM 9-2320-260-10).

SPECIAL ENVIRONMENTAL CONDITION
Vehicle must be on level surface.

NOTE

Retractable beam driveshafts and locks are replaced the same for M820, M820A1, and M820A2 vehicles. This procedure covers the M820A2.

a. Removal

1. Remove locknut (1), screw (4), pawl (3), and lock (2) from underframe (5) and stud (8). Discard locknut (1).
2. Remove thirty screws (7) and five covers (6) from underframe (5).
3. Remove four setscrews (17) from four bushings (16).

CAUTION

Do not bend or strain ratchet shaft during removal. Doing so may result in damage to equipment.

NOTE

- Lubricate ratchet shaft prior to removal.
- Direct assistant under van body to catch shaft components during ratchet shaft removal.
- Remove all nicks, burrs, and corrosion from exposed areas of ratchet shaft with file or emery cloth.

4. Slowly remove ratchet shaft (10), five spacers (11), sprockets (12), spacers (13), nine bushings (14), and four bushings (16) from underframe channels (15).

b. Cleaning and Inspection

1. For general cleaning instructions, refer to para. 2-8.
2. For general inspection instructions, refer to para. 2-9.
3. Remove key (19) and bushing (18) from five sprockets (12). Discard five keys (19).
4. Inspect bushings (18), (14), and (16) for wear. Replace bushing (18), (14), or (16) if worn.

15-25. RETRACTABLE BEAM DRIVESHAFT AND LOCK MAINTENANCE (Contd)

5. Inspect ratchet shaft (10) for burrs, nicks, corrosion, and bends.
   a. Remove burrs, nicks, or corrosion with file or emery cloth.
   b. Replace ratchet shaft (10) if bent.
6. Test spring action of lock plunger (9) in lock (2). Replace lock (2) if spring action is weak.
7. Install new key (19) and bushing (18) in five sprockets (12).

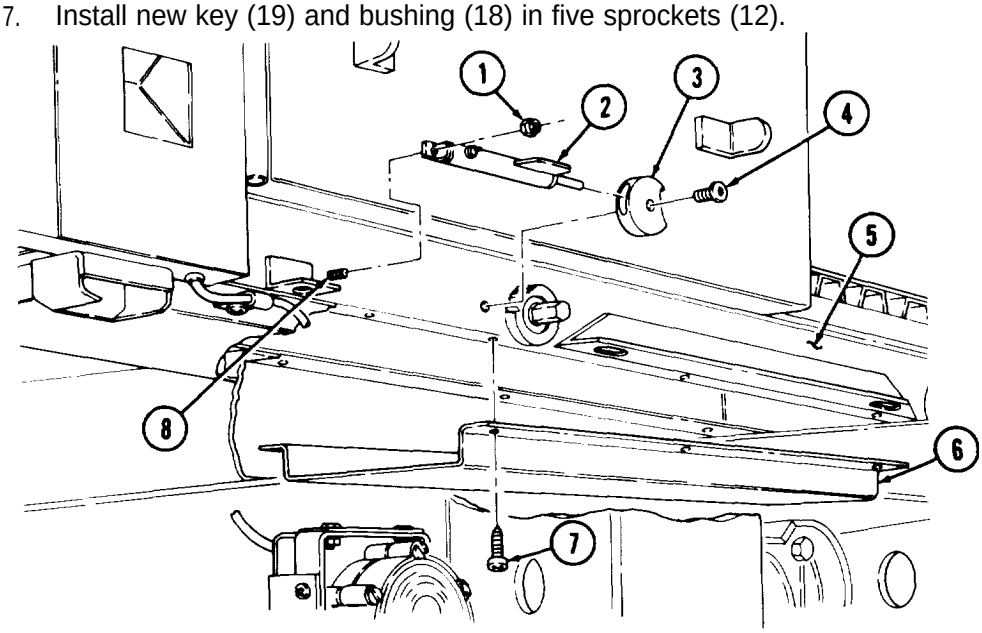

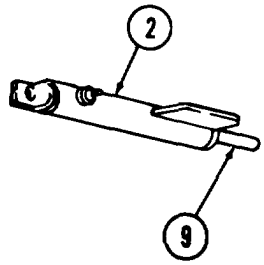

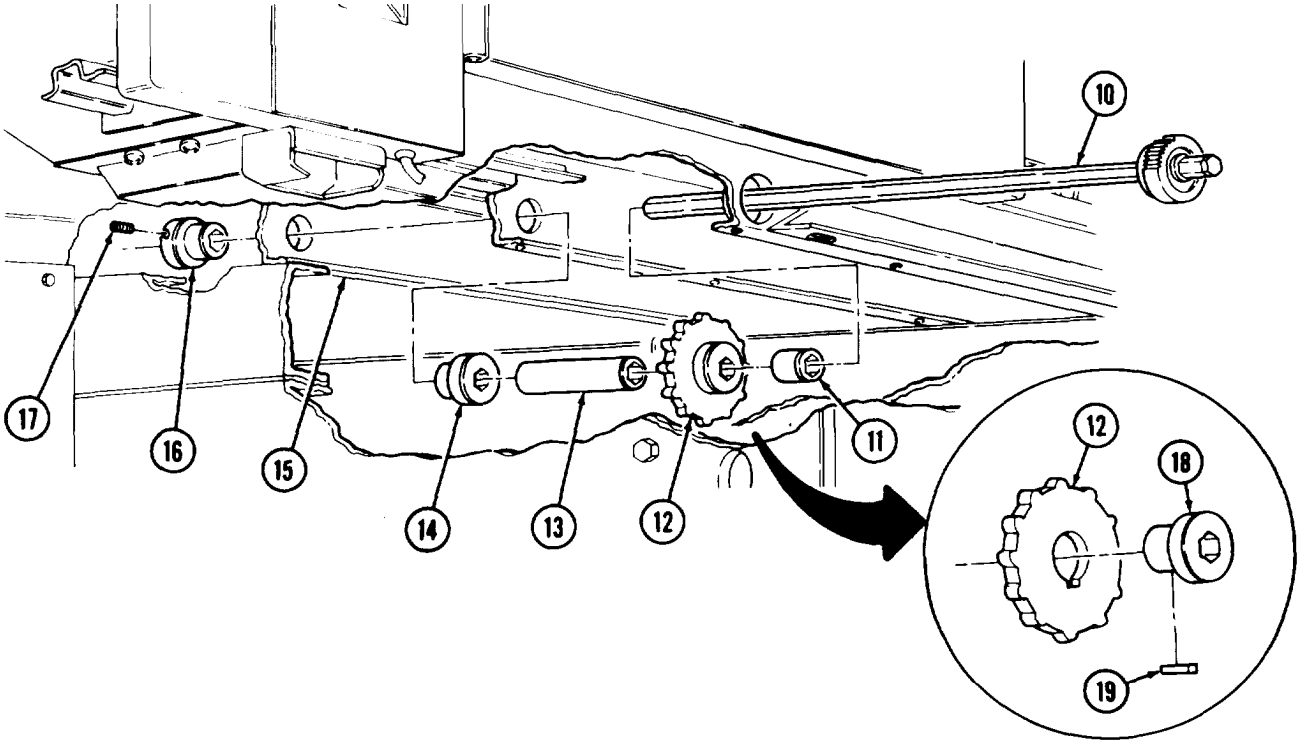

15-25. RETRACTABLE BEAM DRIVESHAFT AND LOCK MAINTENANCE (Contd)

c. Installation

CAUTION

Do not bend or strain ratchet shaft during installation. Doing so may result in damage to equipment.

NOTE

- Bevel forward end of ratchet shaft for installation.
- Coat two feet of forward end of ratchet shaft with GAA grease for installation.
- Direct assistant under van body to install shaft components during ratchet shaft installation.
- Lubricate ratchet shaft prior to installation.

1. Slowly insert ratchet shaft (2) into underframe (1) and install four bushings (8), nine bushings (6), five spacers (5), sprockets (4), and spacers (3) on ratchet shaft (2).
2. Install four setscrews (9) in four bushings (8) in underframe channels (7).
3. Install five covers (14) on underframe (1) with thirty screws (15).
4. Install pawl (12) on underframe (1) with screw (13).
5. Insert lock (11) in pawl (12).
6. Install lock (11) on stud (16) with new locknut (10).

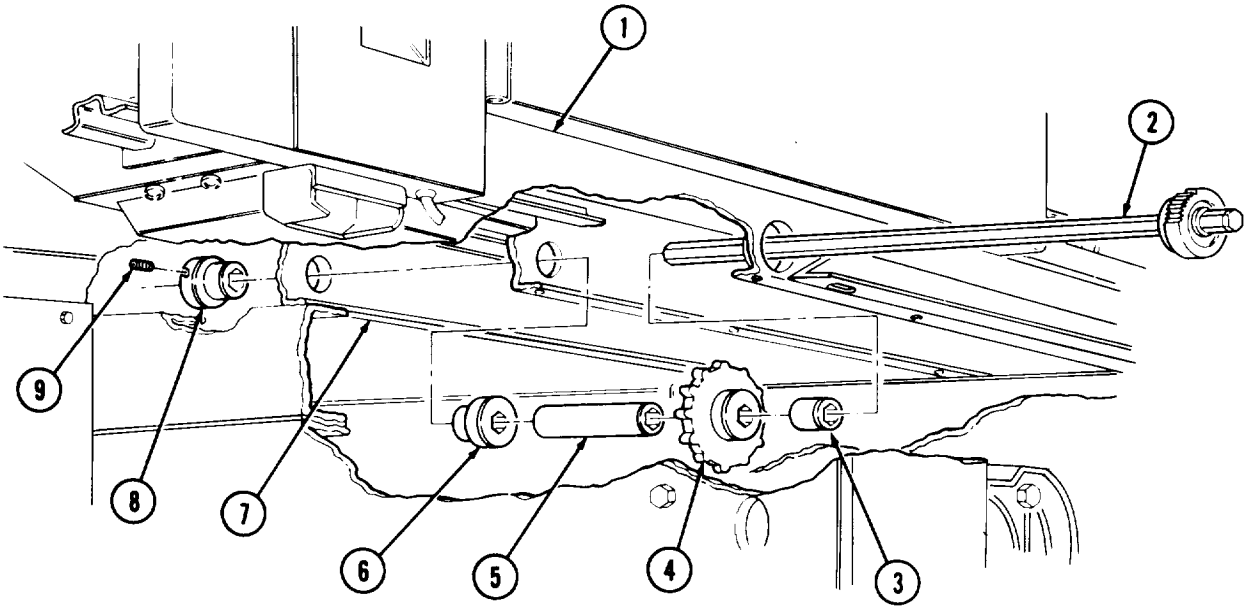

15-25. RETRACTABLE BEAM DRIVESHAFT AND LOCK MAINTENANCE (Contd)

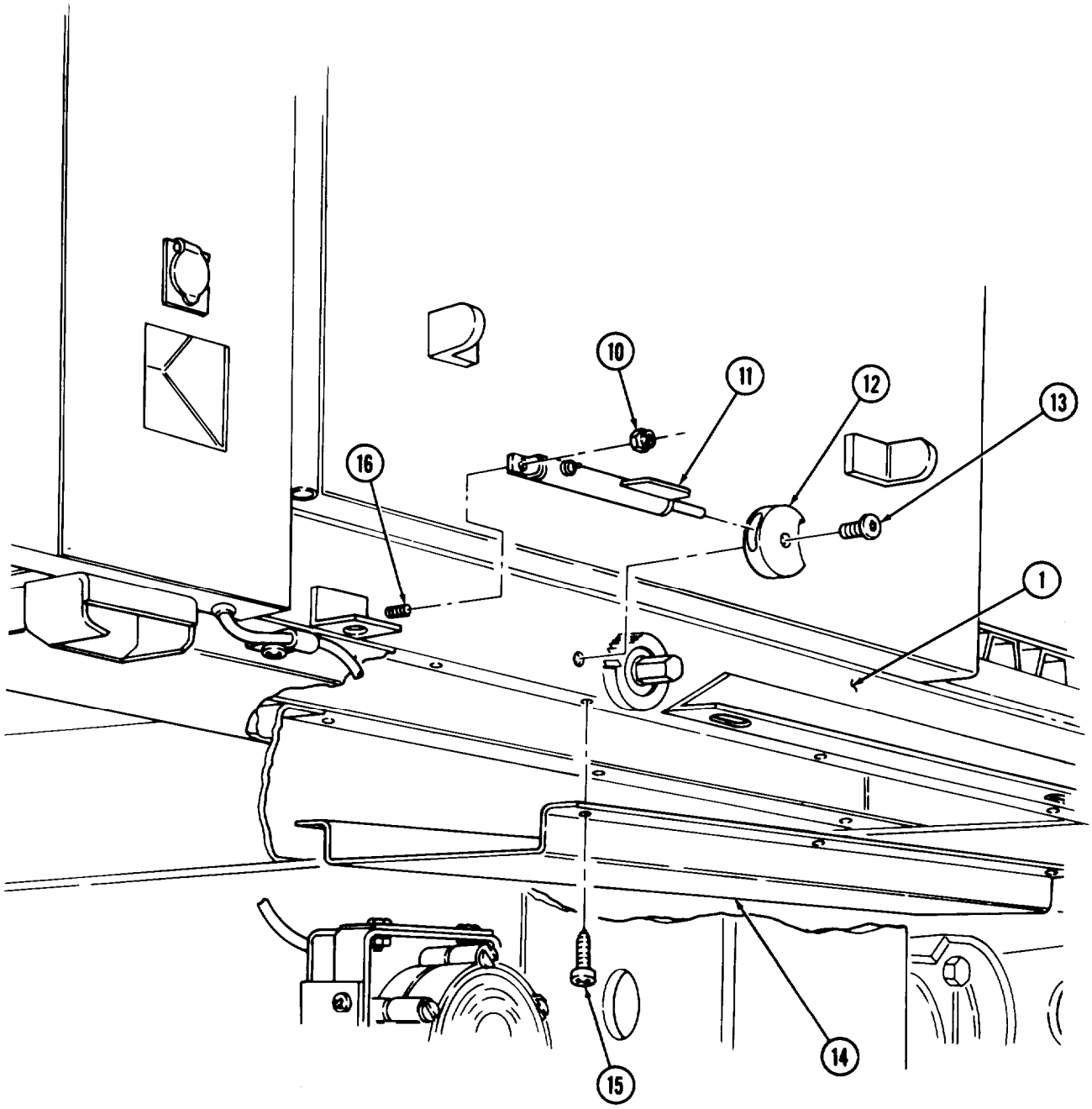

15-26. RETRACTABLE BEAM REPLACEMENT

THIS TASK COVERS:

a. Removal

b. Installation

INITIAL SETUP

APPLICABILE MODELS
M820, M820A1, M820A2

TOOLS
General mechanic's tool kit
(Appendix B, Item 1)

MATERIALS/PARTS
Two locknuts (Appendix D, Item 195)
Seal (Appendix D, Item 445)
Seal (Appendix D, Item 441)
Seal (Appendix D, Item 442)

REFERENCES (TM)
TM 9-237
TM 9-2320-260-10
TM 9-2320-260-34P-2

EQUIPMENT CONDITION
- Parking brake set (TM 9-2320-260-10).
- Van body sides fully expanded and secured (TM 9-2320-260-10).
- Retractable beam rollers removed (para. 15-27).
- Retractable beam driveshaft and lock removed (para. 15-25).

CAUTION

Remove and install retractable beam slowly from underframe. Failure to do so may result in damage to retractable beam.

1. Break welds between side panel (1) and side panel support (13) (TM 9-237) and remove retractable beam (12) frorn side panel (1).
2. Remove retractable beam (12) from underframe (3) at channel (4) by sliding under side panel (1).
3. Remove two locknuts (6), washers (7), screws (11), seven screws (10), retainer (9), and seals (8), (2), and (5) from underframe (3). Discard locknuts (6) and seals (8), (2), and (5).

1. Install new seals (5), (2), and (8) and retainer (9) on underframe (3) with seven screws (10), two screws (11), washers (7), and new locknuts (6).
2. Install retractable beam (12) in underframe (3) at channel (4) by sliding under side panel (1).
3. Weld side panel (1) to side panel support (13) (TM 9-237).

15-26. RETRACTABLE BEAM REPLACEMENT (Contd)

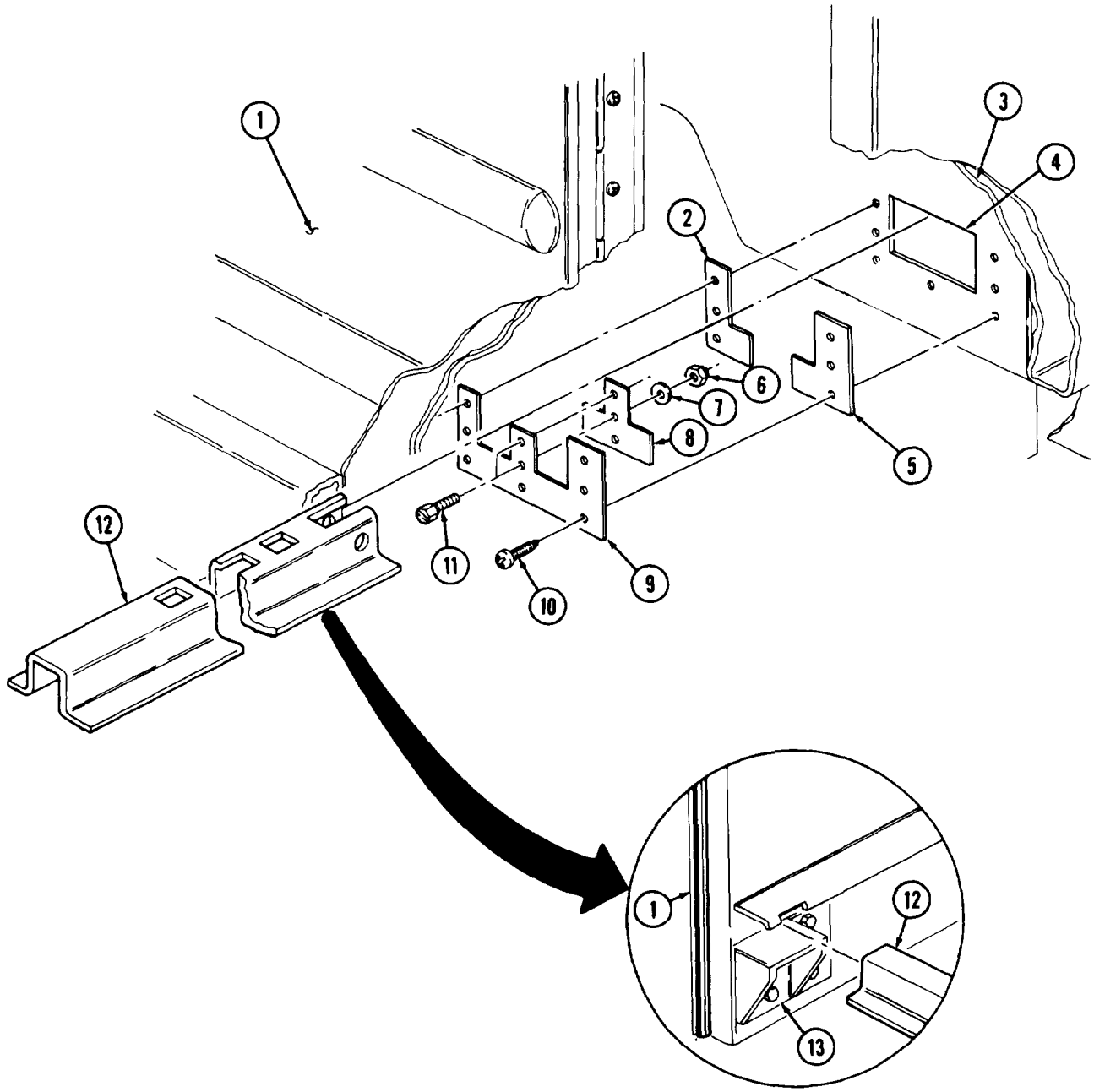

FOLLOW-ON TASKS:
- Install retractable beam driveshaft and lock (para. 15-25)
- Install retractable beam rollers (para. 15-27).
- Retract van body sides (TM 9-2320-260-10).

15-27. RETRACTABLE BEAM ROLLERS REPLACEMENT

THIS TASK COVERS:

a. Support Roller Removal
b. Support Roller Installation
c. End Roller Removal
d. End Roller Installation

INITIAL SETUP

APPLICABLE MODELS
M820, M820A1, M820A2

TOOLS
General mechanic's tool kit (Appendix B, Item 1)

MATERIALS/PARTS
Two cotter pins (support roller) (Appendix D, Item 20)
Two cotter pins (end roller) (Appendix D, Item 21)

REFERENCES (TM)
TM 9-2320-260-10
TM 9-2320-260-34P-2

EQUIPMENT CONDITION
- Parking brake set (TM 9-2320-260-10).
- Van body sides fully expanded and secured (TM 9-2320-260-10).

SPECIAL ENVIRONMENTAL CONDITIONS
Vehicle must be on level surface.

NOTE

All ten support rollers and end rollers are replaced the same. This procedure covers the left-rear support and end roller.

a. Support Roller Removal

NOTE

The left-rear cover is secured with seven screws. All other covers are secured with eight screws.

1. Remove seven screws (3), two clamps (2), and cover (4) from underframe (1).
2. Remove two cotter pins (5) from support roller shaft (7). Discard cotter pins (5).
3. Remove support roller shaft (7) and support roller (6) from underframe (1).

b. Support Roller Installation

1. Install support roller (6) on underframe (1) with support roller shaft (7).
2. Install two new cotter pins (5) in support roller shaft (7).

NOTE

The left-rear cover is secured with seven screws. All other covers are secured with eight screws.

3. Install cover (4) and two clamps (2) on underframe (1) with seven screws (3).

15-27. RETRACTABLE BEAM ROLLERS REPLACEMNET (Contd)

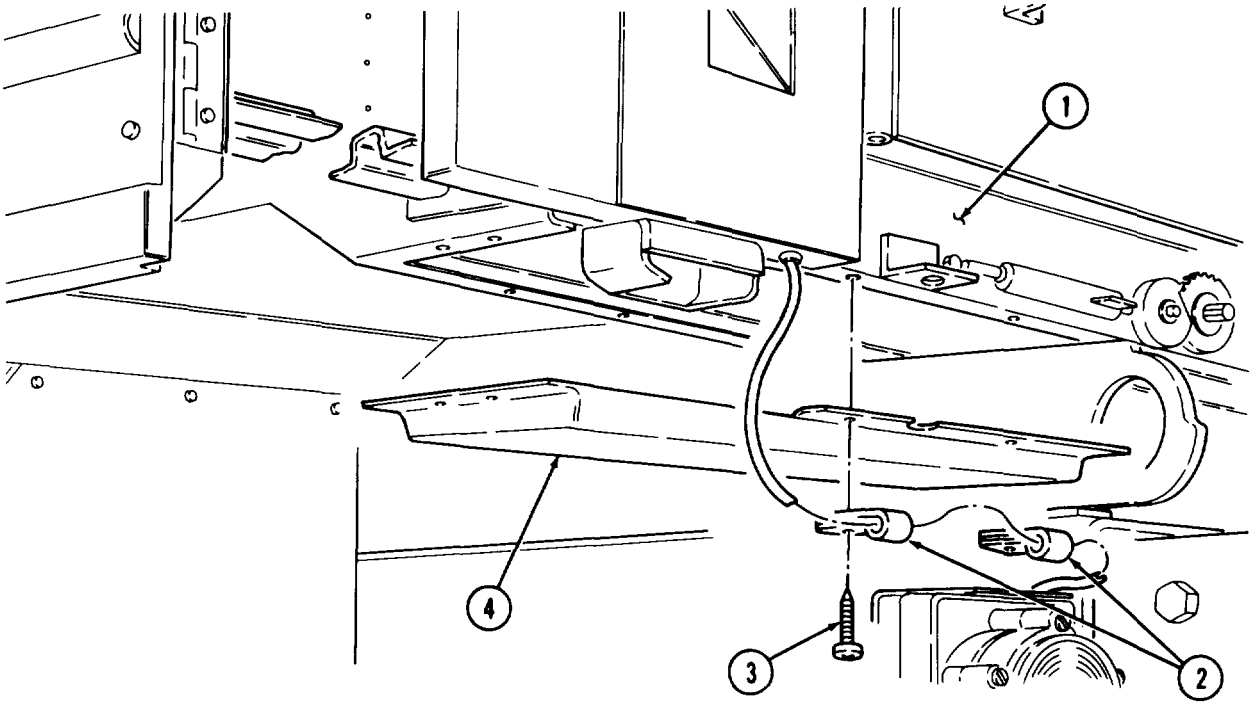

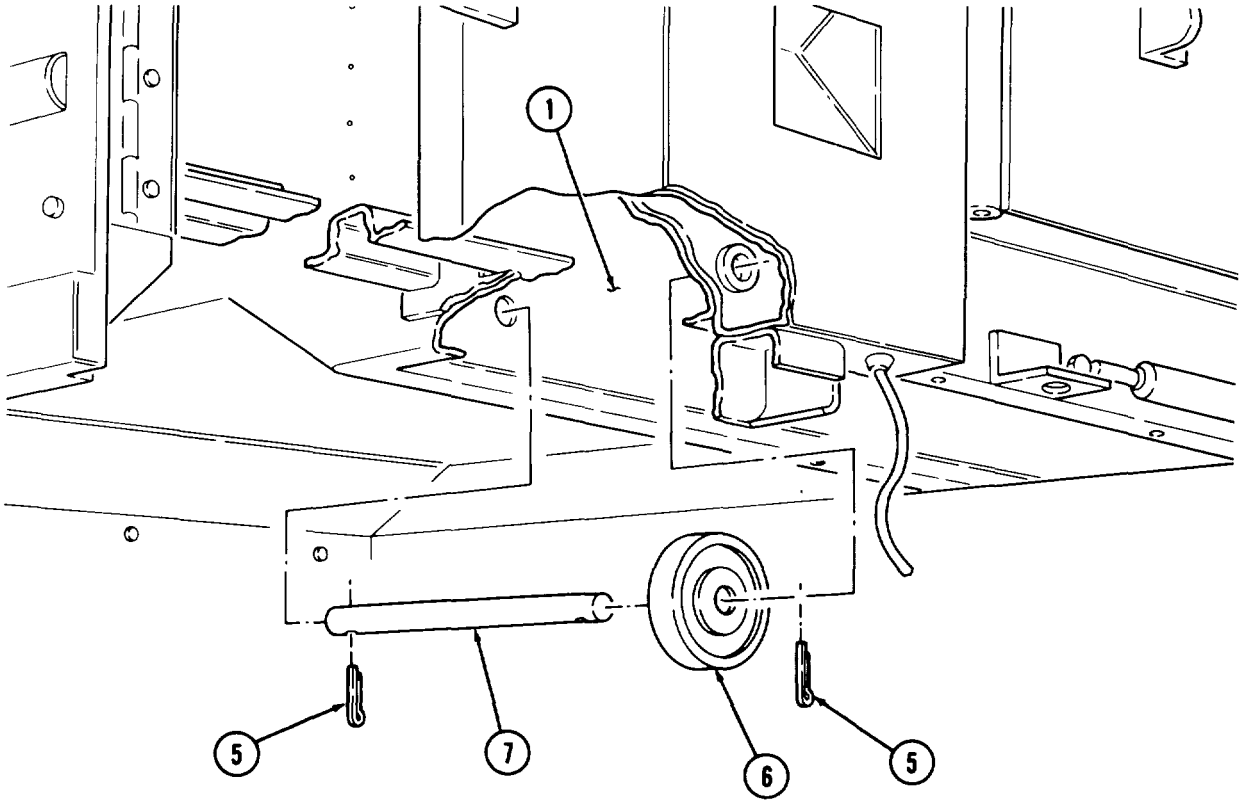

15-27. RETRACTABLE BEAM ROLLERS REPLACEMENT (Contd)

c. End Roller Removal

1. Remove support roller (subtask a.).
2. Remove two cotter pins (3) from end roller shaft (2). Discard cotter pins (3).
3. Remove end roller shaft (2) and end roller (4) from underframe (1).

d. End Roller Installation

1. Install end roller (4) on underframe (1) with end roller shaft (2).
2. Install two new cotter pins (3) in end roller shaft (2).
3. Install support roller (subtask b.).

15-27. RETRACTABLE BEAM ROLLERS REPLACEMENT (Contd)

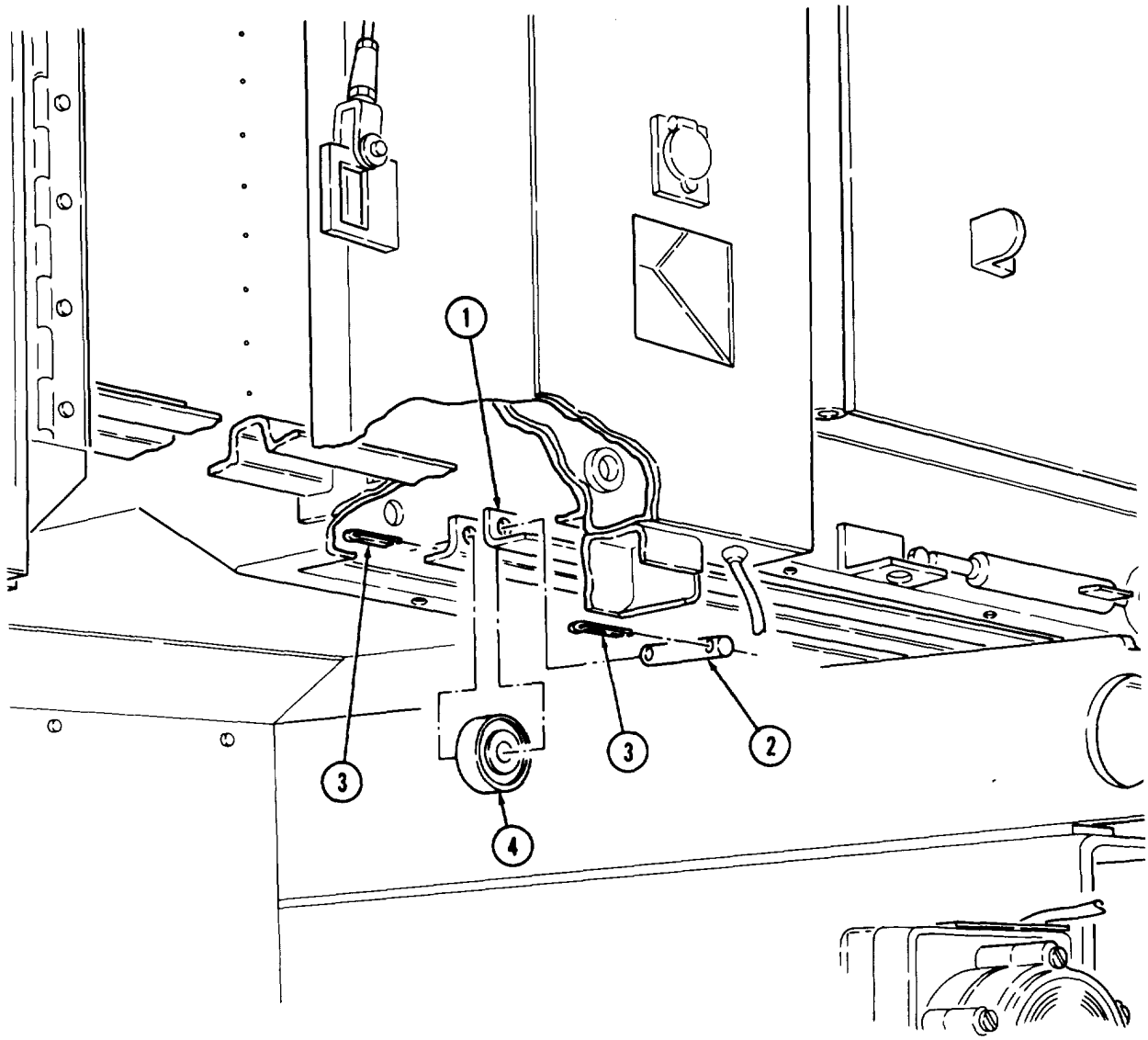

FOLLOW-ON TASK: Retract van body sides (TM 9-2320-260-10).

15-28. REAR DOORS MAINTENANCE

THIS TASK COVERS:

a. Removal
b. Disassembly
c. Cleaning and Inspection
d. Assembly
e. Installation

INITIAL SETUP

APPLICABLE MODELS
M820, M820A1, M820A2

TOOLS
General mechanic's tool kit (Appendix B, Item 1)
Rivet gun (Appendix B, Item 120)

MATERIALS/PARTS
Two cotter pins (Appendix D, Item 21)
Four lockwashers (M820, M820A1) (Appendix D, Item 215)
Two lockwashers (right-rear, M820A1) (Appendix D, Item 253)
Two lockwashers (Appendix D, Item 223)
Four locknuts (M820, M820A1) (Appendix D, Item 182)
Seven rivets (Appendix D, Item 346)
Three rivets (right-rear) (Appendix D, Item 347)
Gasket (right-rear) (Appendix D, Item 78)
Seal (Appendix D, Item 444)
Seal (Appendix D, Item 445)

MATERIALS/PARTS (contd)
Seal (M820, M820A2) (Appendix D, Item 448)
Seal (M820A1) (Armendix D, Item 446)
Weatherseal (Ieft-rear, M820, M820A1) (Appendix D, Item 540)
Weatherseal (left-rear, M820A2) (Appendix D, Item 541)
Sealing compound (Appendix C, Item 45)
Adhesive (Appendix C, Item 3)

REFERENCES (TM)
TB 43-0213
TM 9-2320-260-10
TM 9-2320-260-20
TM 9-2320-260-34P-2

EQUIPMENT CONDITION
- Ladders removed (TM 9-2320-260-10).
- Liftgate lowered (M820A2) (TM 9-2320-260-10).
- Door window removed (if equipped) (M820, M820A2) (TM 9-2320-260-20).

a. Removal

NOTE

Left- and right-rear doors are removed the same. This procedure covers the left-rear door.

1. Remove two screws (1), lockwashers (2), doorcheck (3), and bracket (4) from door (7). Discard lockwashers (2).
2. Remove fifteen screws (6) and door (7) from van body (5).

b. Disassembly

NOTE

Perform steps 1 through 3 for M820 and M820A1 vehicles.

1. Remove four screws (10) and two angle brackets (9) from outer panel of door (7).
2. Remove four screws (13), lockwashers (12), and clamp (11) from outer panel of door (7). Discard lockwashers (12).
3. Remove two screws (15), locknuts (14), screws (8), washers (18), bushings (17), and rack (16) from outer panel of door (7). Discard locknuts (14).

15-28. REAR COORS MAINTENANCE (Contd)

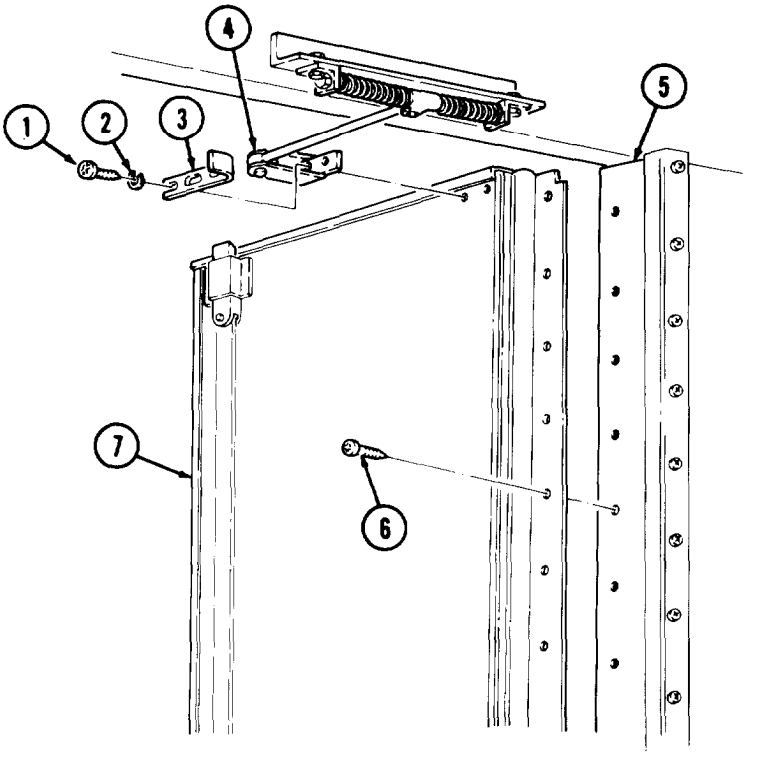

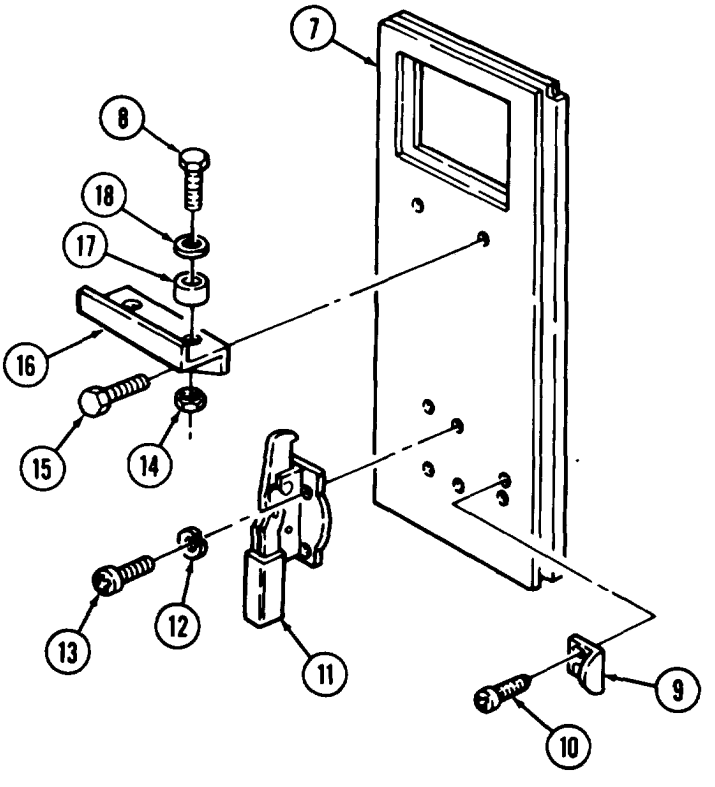

M820, M820A1

15-28. REAR DOORS MAINTENANCE (Contd)

4. Remove seven rivets (29) and seal (28) from door frame (6). Discard rivets (29) and seal (28).

NOTE

Perform step 5 for left-rear door.

5. Remove four screws (12), clip (11), six screws (25), and bracket (26) from inner panel (8).

NOTE

Perform step 6 for right-rear door.

6. Remove three rivets (33), handle (32), and gasket (31) from door (6). Discard gasket (31) and rivets (33).
7. Remove two cotter pins (20), screws (17), lockwashers (18), and rods (13) from center case (24) and two bolts (15). Discard cotter pins (20) and lockwashers (18).
8. Remove pins (22) and (23) and handle (21) from center case (24).
9. Remove four screws (19) and center case (24) from inner panel (8).

NOTE

- Perform step 10 for left-rear door on M820 and M820A2 vehicles.
- Perform step 11 for left-rear door on M820A1 and all right-rear doors.

10. Remove eight screws (16), two bolts (15), and spacer plates (14) from inner panel (8).
11. Remove eight screws (16) and two bolts (15) from inner panel (8).
12. Remove sixteen screws (1), retainer (2), seal (3), hinge (4), and seal (5) from door (6). Discard seals (3) and (5).
13. Remove eleven screws (9), thirty-two screws (10), and inner panel (8) from door (6).
14. Break adhesive seal and remove four moldings (7) and (27) from inner panel (8).

NOTE

Perform step 15 for left-rear door.

15. Break adhesive seal and remove weatherseal (30) from door (6). Discard weatherseal (30).

15-28. REAR DOORS MAINTENANCE (Contd)

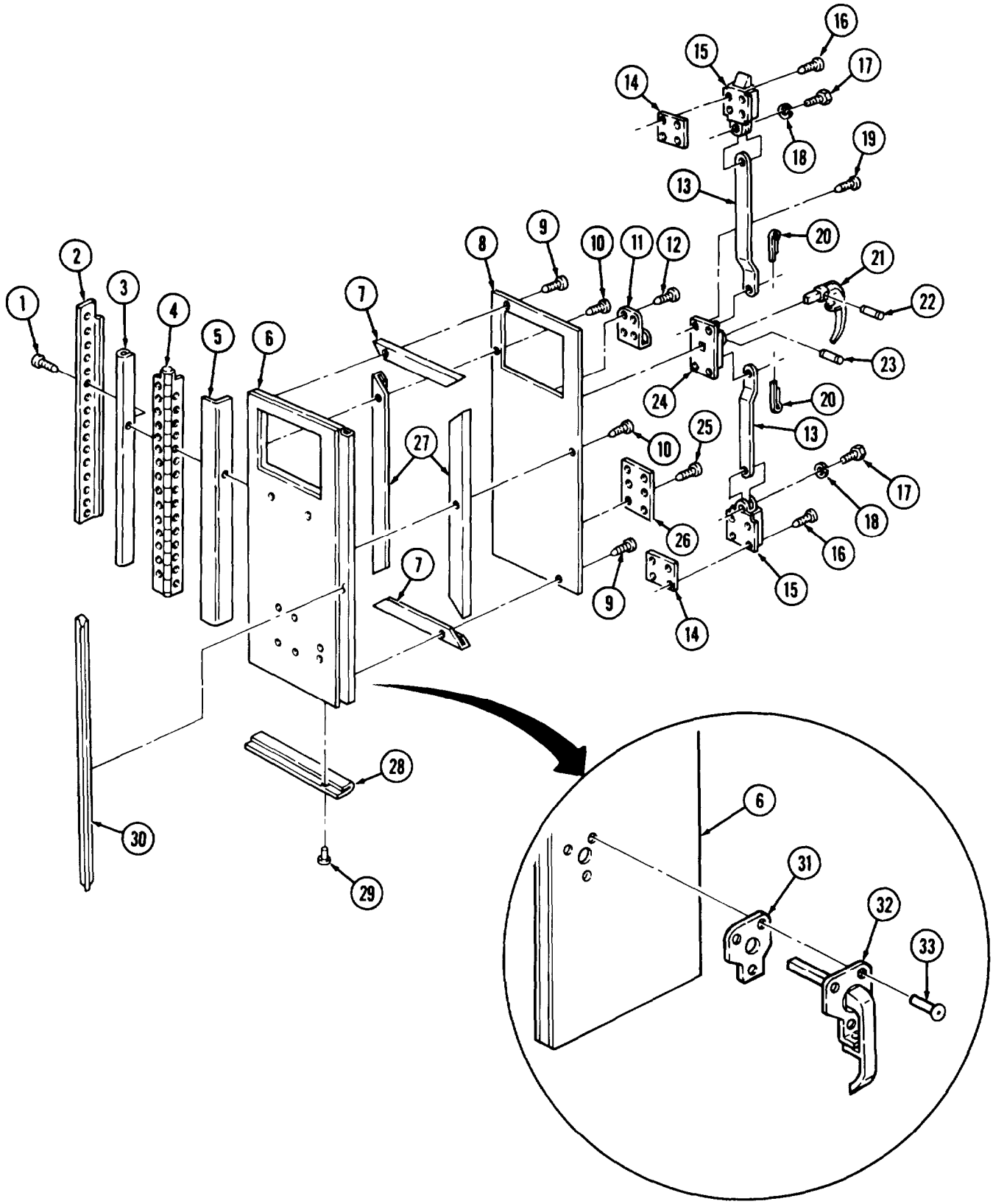

15-28. REAR DOORS MAINTENANCE (Contd)

c. Cleaning and Inspection

1. For general cleaning instructions, refer to para. 2-8.
2. Visually inspect all movable parts of center case (6) for proper operation. Replace center case (6) if damaged.
3. Inspect rods (7) and four moldings (2) and (8) for bends, breaks, or cracks. Replace part(s) if damaged.

d. Assembly

1. Rustproof all inside surfaces and boxed-in areas (TB 43-0213).

NOTE

- Apply sealing compound between exterior joints.
- Apply adhesive to rubber and metal surfaces for installation.

2. Install four moldings (2) and (8) on inner panel (3).
3. Install inner panel (3) on door (1) with eleven screws (4) and thirty-two screws (5).

NOTE

Perform step 4 for left-rear doors.

4. Install new weatherseal (9) on door (1) with adhesive.

15-28. REAR DOORS MAINTENANCE (Contd)

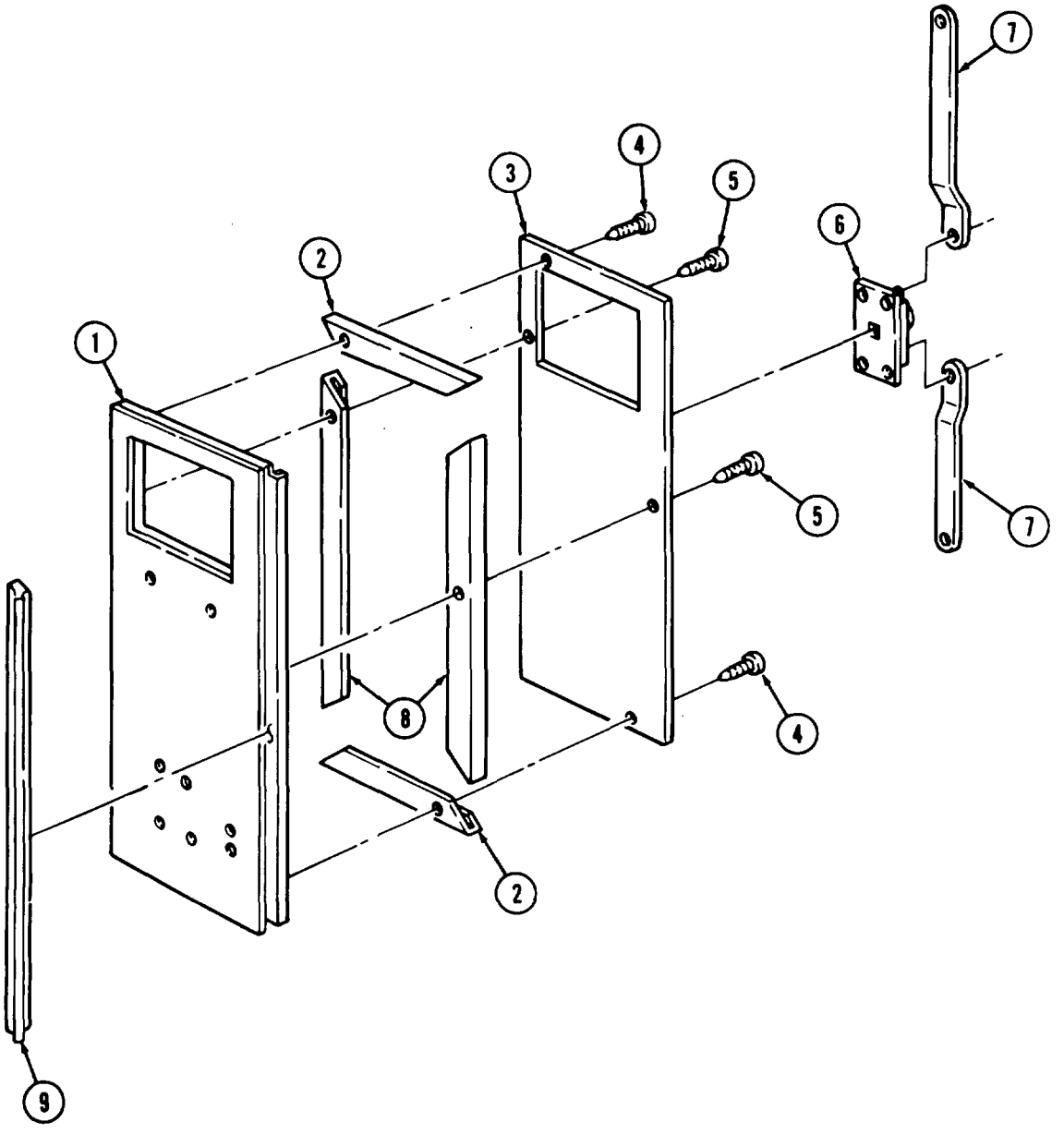

15-28. REAR DOORS MAINTENANCE (Contd)

5. Install new seal (5), hinge (4), new seal (3), and retainer (2) on door (6) with sixteen screws (1).

NOTE

- Perform step 6 for left-rear door on M820 and M820A2 vehicles.
- Perform step 7 for left-rear door on M820A1 vehicles and all right-rear doors.

6. Install two spacer plates (9) and bolts (10) on door (6) with eight screws (11).
7. Install two bolts (10) on door (6) with eight screws (11).
8. Install center case (20) on door (6) with four screws (15).
9. Install two rods (14) on center case (20) and two bolts (10) with two new cotter pins (16), new lockwashers (13), and screws (12).

NOTE

Ž Perform step 10 for left-rear door.

- Perform step 11 for right-rear door.

10. Install handle (17) on center case (20) with pins (18) and (19).
11. Install new gasket (25) and handle (26) on door (6) with three new rivets (27).

NOTE

Perform step 12 for right-rear door.

12. Install clip (7) and bracket (21) on door (6) with four screws (8) and six screws (22).
13. Install new seal (24) on door (6) with seven new rivets (23).

15-28. REAR DOORS MAINTENANCE (Contd)

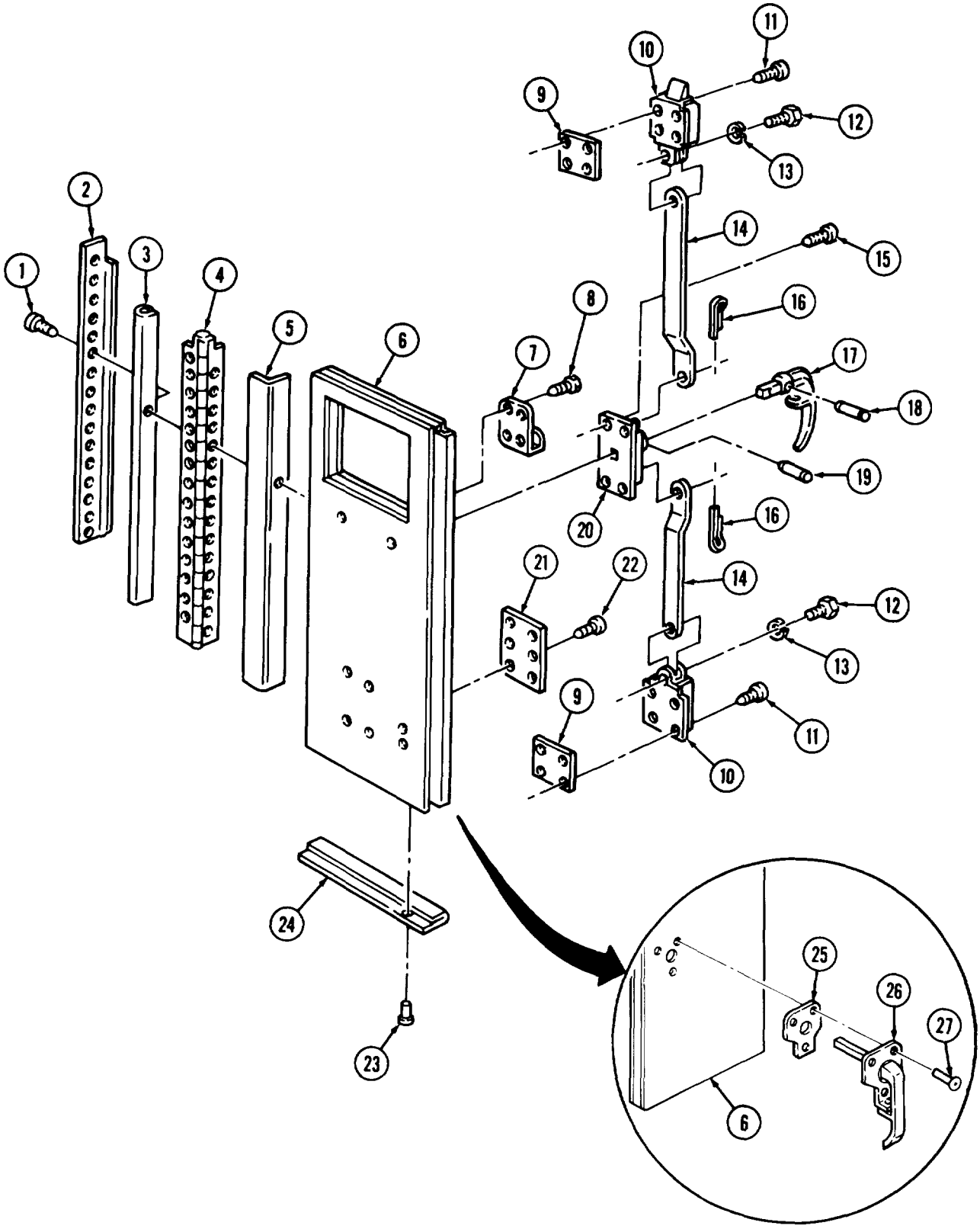

15-28. REAR DOORS MAINTENANCE (Contd)

NOTE

Perform steps 14 through 16 for M820 and M820A1 vehicles.

14. Install rack (9) on door (1) with two screws (8), screws (12), washers (11), bushings (10), and new locknuts (7).
15. Install clamp (4) on door (1) with four new lockwashers (5) and screws (6).
    Install two angle brackets (2) on door (1) with four screws (3).

e. Installation

NOTE

- Left- and right-rear doors are installed the same. This procedure covers the left-rear door.
- Assistant will help with step 1.

1. Aline holes of door hinge (17) with holes in van body (18) and install door (1) on van body (18) with fifteen screws (19).
2. Install doorcheck (15) and bracket (16) on door (1) with two new lockwashers (14) and screws (13).

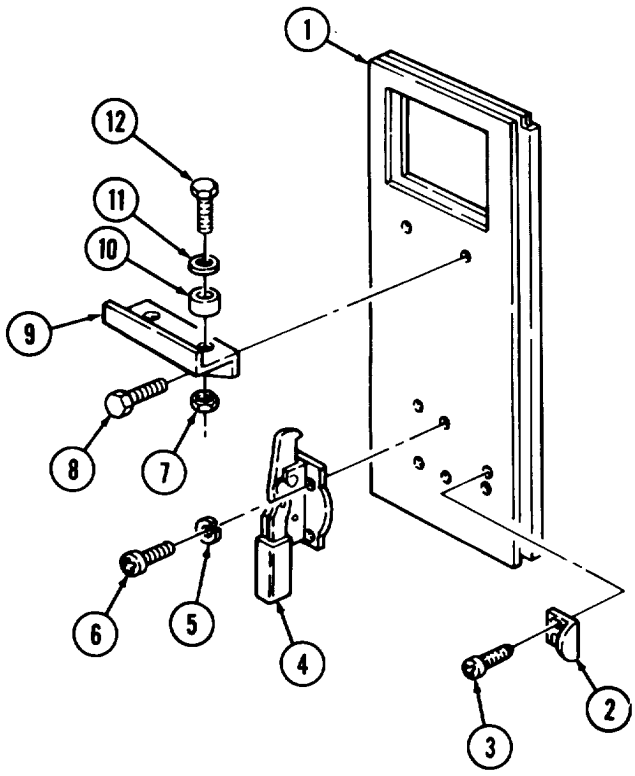

M820, M820A1

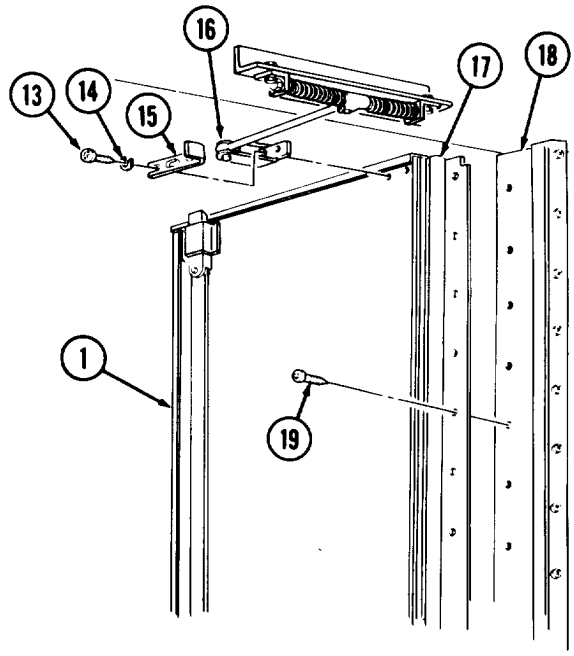

FOLLOW-ON TASKS:
- Install door window (if equipped) (M820, M820A2) (TM 9-2320-260-20).
- Install ladders (TM 9-2320-260-10).
- Raise liftgate (M820A2) (TM 9-2320-260-10).

15-29. SIDE DOORS MAINTENANCE

THIS TASK COVERS:

a. Removal
b. Disassembly
c. Cleaning and Inspection
d. Assembly
e. Installation

INITIAL SETUP

APPLICABLE MODELS
M820, M820A1, M820A2

TOOLS
General mechanic's tool kit (Appendix B, Item 1)
Rivet gun (Appendix B, Item 120)

MATERIAIS/PARTS
Sixteen rivets (Appendix D, Item 348)
Three rivets (Appendix D, Item 347)
Two cotter pins (Appendix D, Item 21)
Two lockwashers (Appendix D, Item 215)
Gasket (Appendix D, Item 78)
Two lockwashers (Appendix D, Item 224)
Seal (Appendix D, Item 446)
Seal (Appendix D, Item 445)

MATERIALS/PARTS (Contd)
Sealing compound (Appendix C, Item 45)
Adhesive (Appendix C, Item 2)

REFERENCES (TM)
TB 43-0213
TM 9-2320-260-10
TM 9-2320-260-20
TM 9-2320-260-34P-2

EQUIPMENT CONDITION
- Parking brake set (TM 9-2320-260-10).
- Door window removed (if equipped) (M820, M820A2) (TM 9-2320-260-20).
- Van body sides fully expanded and secured (TM 9-2320-260-10).

a. Removal

1. Remove two screws (1), lockwashers (2), bracket (3), and door check (4) from door (5). Discard lockwashers (2).

NOTE

Assistant will help with step 2.

2. Remove fifteen screws (6) and door (5) from side panel (7).

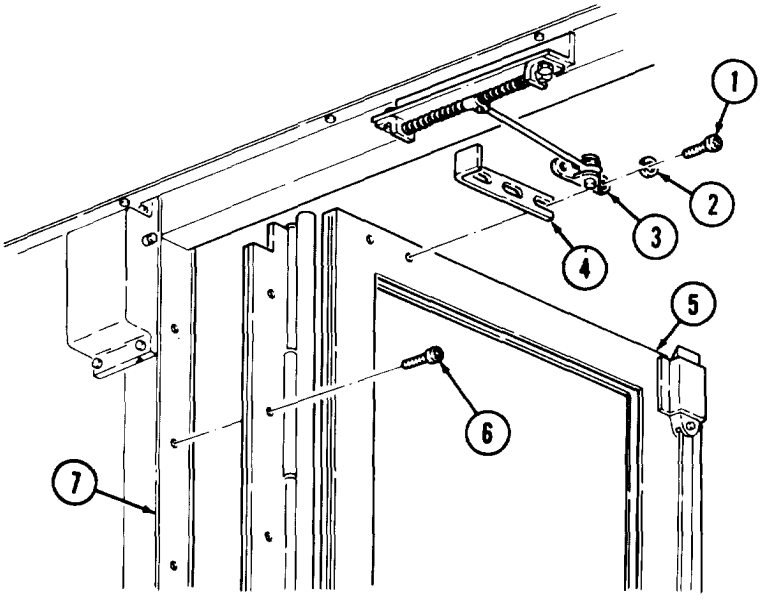

15-29. SIDE DOORS MAINTENANCE (Contd)

b. Disassembly

1. Remove pin (22) and handle (21) from center case (26) and handle (15).
2. Remove three rivets (16), handle (15), and gasket (14) from pocket (13). Discard rivets (16) and gasket (14).
3. Remove sixteen rivets (17) and pocket (13) from door (7). Discard fivets (17).
4. Remove two cotter pins (20), screws (19), lockwashers (18), and rods (24) from center case (26) and bolts (2). Discard cotter pins (20) and lockwashers (18).
5. Remove four screws (23) and center case (26) from inner panel (4).
6. Remove eight screws (1) and bolts (2) from inner panel (4).
7. Remove fourteen screws (12), retainer (11), seal (10), hinge (9), and seal (8) from door (7). Discard seals (10) and (8).
8. Remove eleven screws (3), thirty-two screws (25), and inner panel (4) from door (7).
9. Break adhesive and remove four moldings (5) and (6) from inner panel (4).

c. Cleaning and Inspection

1. For general cleaning instructions, refer to para. 2-8.
2. For general inspection instructions, refer to para. 2-9.
3. Inspect all movable parts of center case (26) and two bolts (2) for proper operation. Replace center case (26) or bolts (2) if damaged.
4. Inspect rods (24), moldings (5) and (6), and pocket (13) for bends, breaks, and cracks. Replace rods (24), moldings (5) or (6), or pocket (13), if damaged.
5. Inspect door (7) for damage. Replace door (7) if damaged.

15-29. SIDE DOORS MAINTENANCE (Contd)

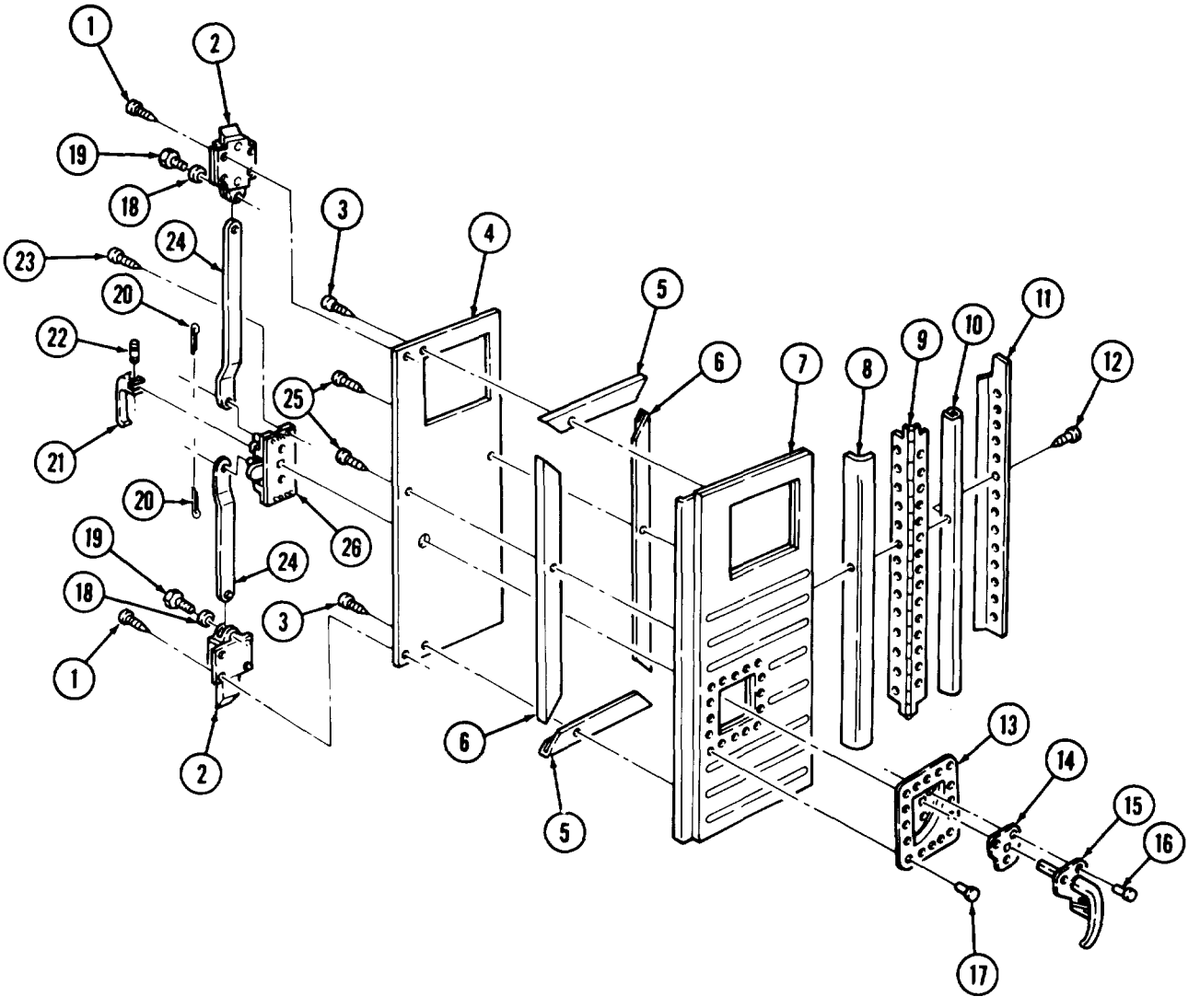

15-29. SIDE DOORS MAINTENANCE (Contd)

d. Assembly

NOTE

- Rustproof all inside surfaces and boxed-in areas (TB 43-0213).
- Apply sealing compound to exterior joints.

1. Install four moldings (5) and (6) on inner panel (4) with adhesive.
2. Install inner panel (4) on door (7) with eleven screws (3) and thirty-two screws (25).
3. Install new seal (8), hinge (9), new seal (10), and retainer (11) on door (7) with fourteen screws (12).
4. Install two bolts (2) on door (7) with eight screws (1).
5. Install center case (26) on door (7) with four screws (23).
6. Install two rods (24) on center case (26) and two bolts (2) with two new cotter pins (20), new lockwashers (19), and screws (18).
7. Install pocket (13) on door (7) with sixteen new rivets (17).
8. Install new gasket (14) and handle (15) on door (7) and pocket (13) with three new rivets (16).
9. Install handle (21) on center case (26) and handle (15) with pin (22).

e. Installation

NOTE

Assistant will help with step 1.

1. Install door (7) on van body (32) with fifteen screws (31).
2. Install door check (27) and bracket (28) on door (7) with two new lockwashers (29) and screws (30).

15-29. SIDE DOORS MAINTENANCE (Contd)

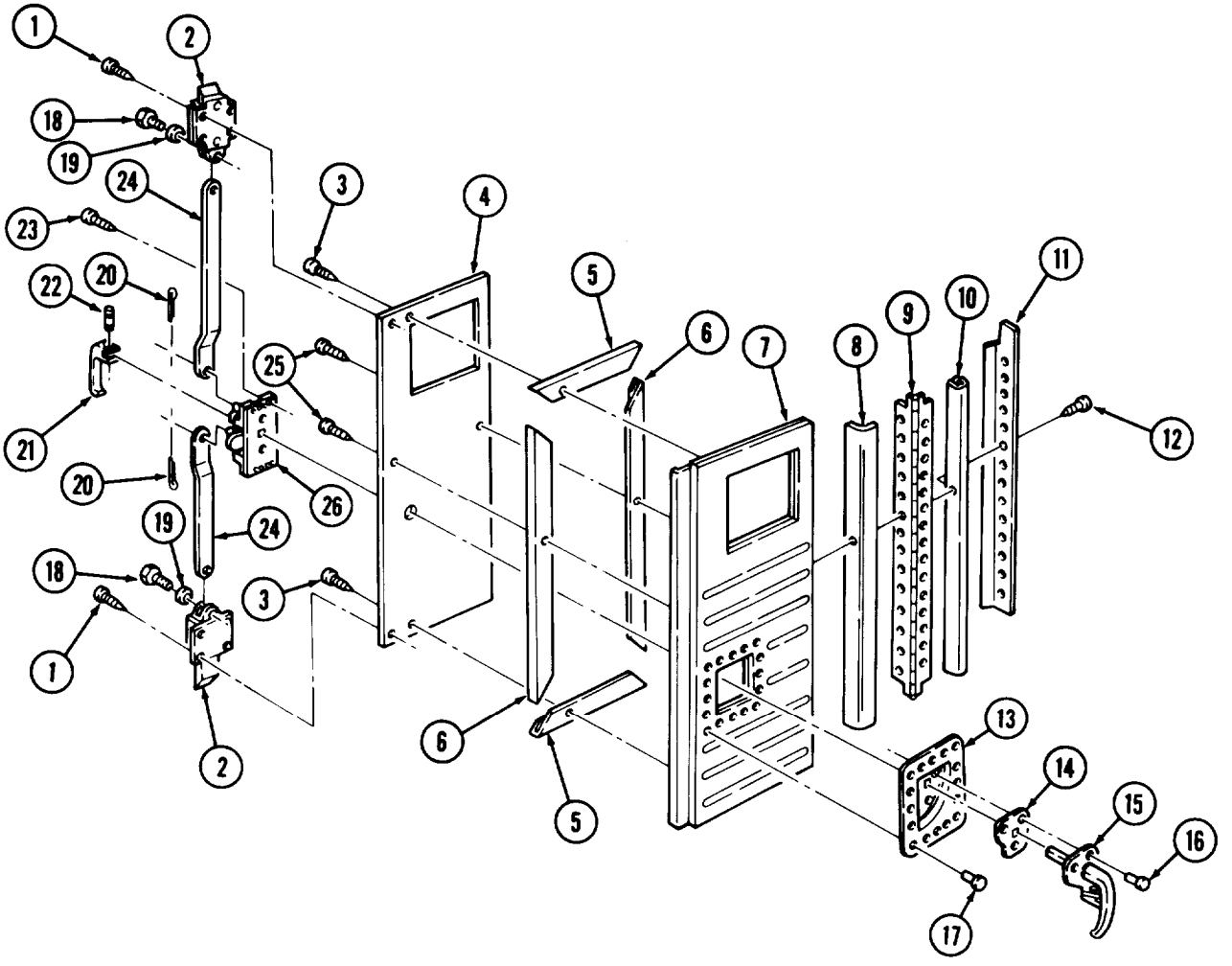

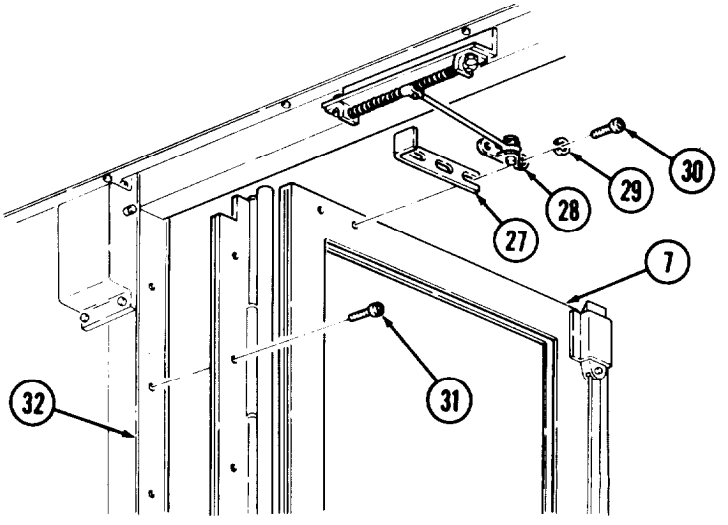

FOLLOW-ON TASKS:
- Install door window (if equipped) (M820, M820A2) (TM 9-2320-260-20).
- Retract van body sides (TM 9-2320-260-10).

15-30. UNDERFRAME REPAIR

THIS TASK COVERS:

a. Disassembly b. Assembly

INITIAL SETUP

APPLICABLE MODES
M820, M820A1, M820A2

TOOLS
General mechanic's tool kit (Appendix B, Item 1)
Rivet gun (Appendix B, Item 120)

MATERIALS/PARTS
Eight lockwashers (Appendix D, Item 224)
Thirty-two rivets (M820A1) (Appendix D, Item 349)
Thirty-two rivets (M820, M820A2) (Appendix D, Item 350)

MATERIALS/PARTS (Contd)
Two seals (Appendix D, Item 447)
Sealing compound (Appendix C, Item 45)

REFERENCES (TM)
TM 9-2320-260-10
TM 9-2320 -260-34P-2

EQUIPMENT CONDITION
Parking brake set (TM 9-2320-260-10).

a. Disassembly

NOTE

- Retainers are replaced the basically the same on M820, M820A1, and M820A2 vehicles. This procedures covers the M820 and M820A2 vehicles.
- Assistant will help with step 1.

1. Remove one hundred twenty-eight screws (15), two retainers (14), channels (12), and seals (13) from underframe (1). Discard seals (13).
2. Remove thirty-two screws (4) and four covers (5) from underframe (1).
3. Remove eight nuts (3), lockwashers (2), screws (7), and four plates (6) from underframe (1). Discard lockwashers (2).
4. Remove thirty-two rivets (8) and eight tiedowns (9) from underframe (1). Discard rivets (8).
5. Remove four screws (11) and angle bracket (10) from underframe (1).

b. Assembly

1. Install angle bracket (10) on underframe (1) with four screws (11).
2. Install eight tiedowns (9) on underframe (1) with thirty-two new rivets (8).
3. Install four plates (6) on underframe (1) with eight screws (7), new lockwashers (2), and nuts (3).
4. Install four covers (5) on underframe (1) with thirty-two screws (4).

NOTE

- Apply sealing compound to exterior joints for installation.
- Assistant will help with step 5.

5. Install two new seals (13), channels (12), and retainers (14) on underframe (1) with one hundred twenty-eight screws (15).

15-30. UNDERFRAME REPAIR (Contd)

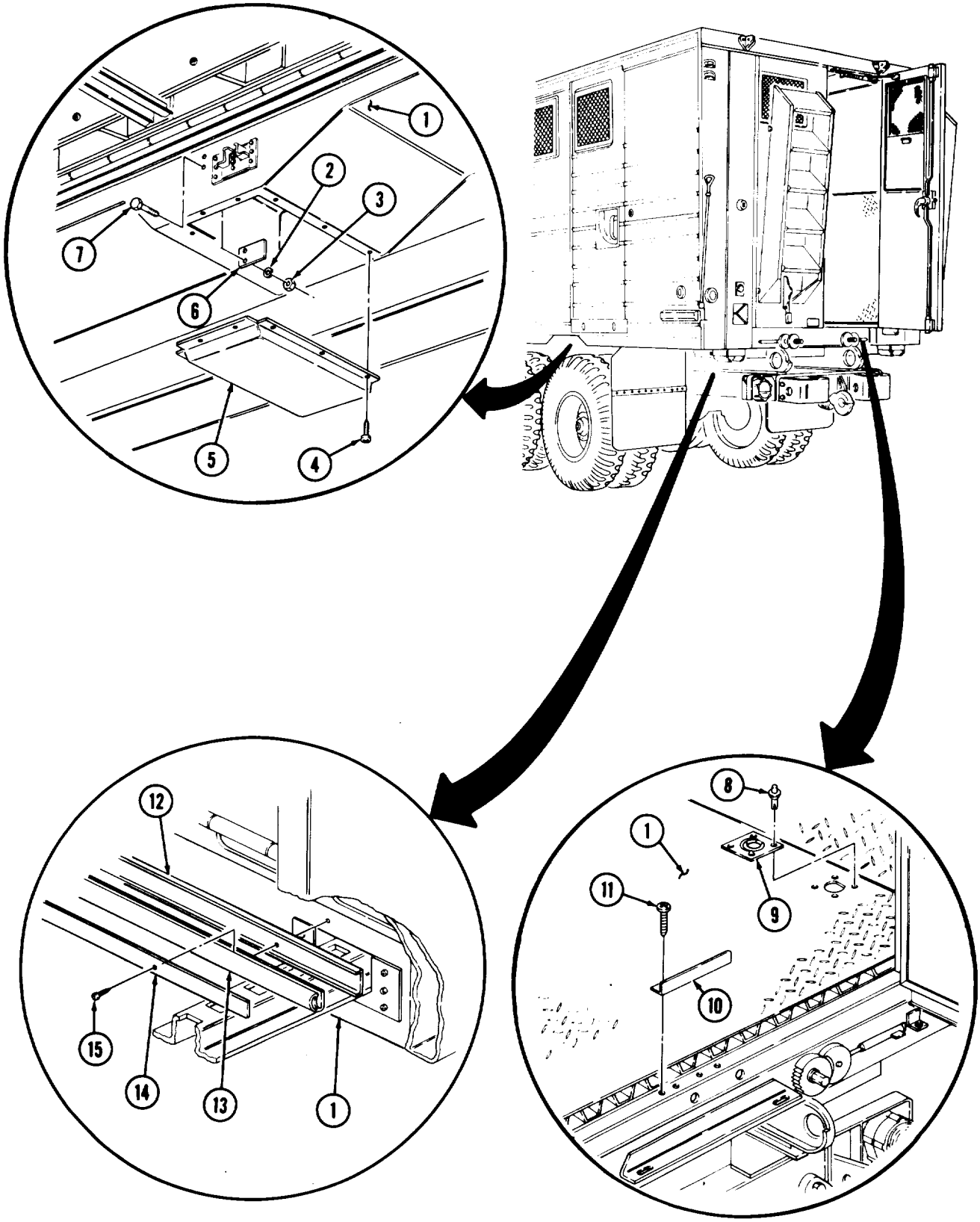

15-31. HINGED FLOOR MAINTENANCE

THIS TASK COVERS:

a. Removal
b. Disassembly
c. Cleaning and Inspection
d. Assembly
e. Installation

INITIAL SETUP

APPLICABLE MODEM
M820, M820A1, M820A2.

TOOLS
General mechanic's tool kit (Appendix B, Item 1)
Rivet gun (Appendix B, Item 120)

MATERIALS/PARTS
Four seals (M820, M820A2) (Appendix D, Item 446)
Four seals (M820A1) (Appendix D, Item 444)
Seal (Appendix D, Item 449)
Fifty-six rivets (Appendix D, Item 351)

MATERIALS/PARTS (Contd)
Adhesive (Appendix C, Item 2)
sealing compound (Appendix C, Item 45)

REFERENCES (TM)
TM 9-237
TM 9-2320-260-10
TM 9-2320-260-20
TM 9-2320 -260-34P-2

EQUIPMENT CONDITION
l Van body sides fully expanded and secured (TM 9-2320-260-10).
l Hinged end panel opened (TM 9-2320-260-10),
l Counterbalance removed (TM 9-2320-260-20).

NOTE

Left and right side hinged floors are maintained the same. This procedure covers the left hinged floor.

a. Removal

NOTE

- Perform step 1 for M820 and M820A2 vehicles.
- Perform step 2 for M820A1 vehicles.
- Assistant will help with step 1 or 2.

1. Remove fifty-five screws (4), four screws (2), and hinged floor (1) from hinge (3).
2. Remove fifty-nine screws (4) and hinged floor (1) from hinge (3).

b. Disassembly

NOTE

Perform step 1 for M820 and M820A2 vehicles.

1. Remove four screws (7) and two pivots (8) from hinged floor (1).
2. Remove thirty screws (9), two retainers (6), four seals (10), and two channels (5) from hinged floor (1). Discard seals (10).
3. Remove ten screws (13) and five pads (12) from hinged floor (1).
4. Remove four screws (15) and handle (14) from hinged floor (1).
5. Remove seal (11) from hinged floor (l). Discard seal (11).

NOTE

Perform step 6. if hinge is to be replaced (subtask c.).

6. Remove fifty-six rivets (16) and hinge (3) from underframe (17). Discard rivets (16).

15-31. HINGED FLOOR MAINTENANCE (Contd)

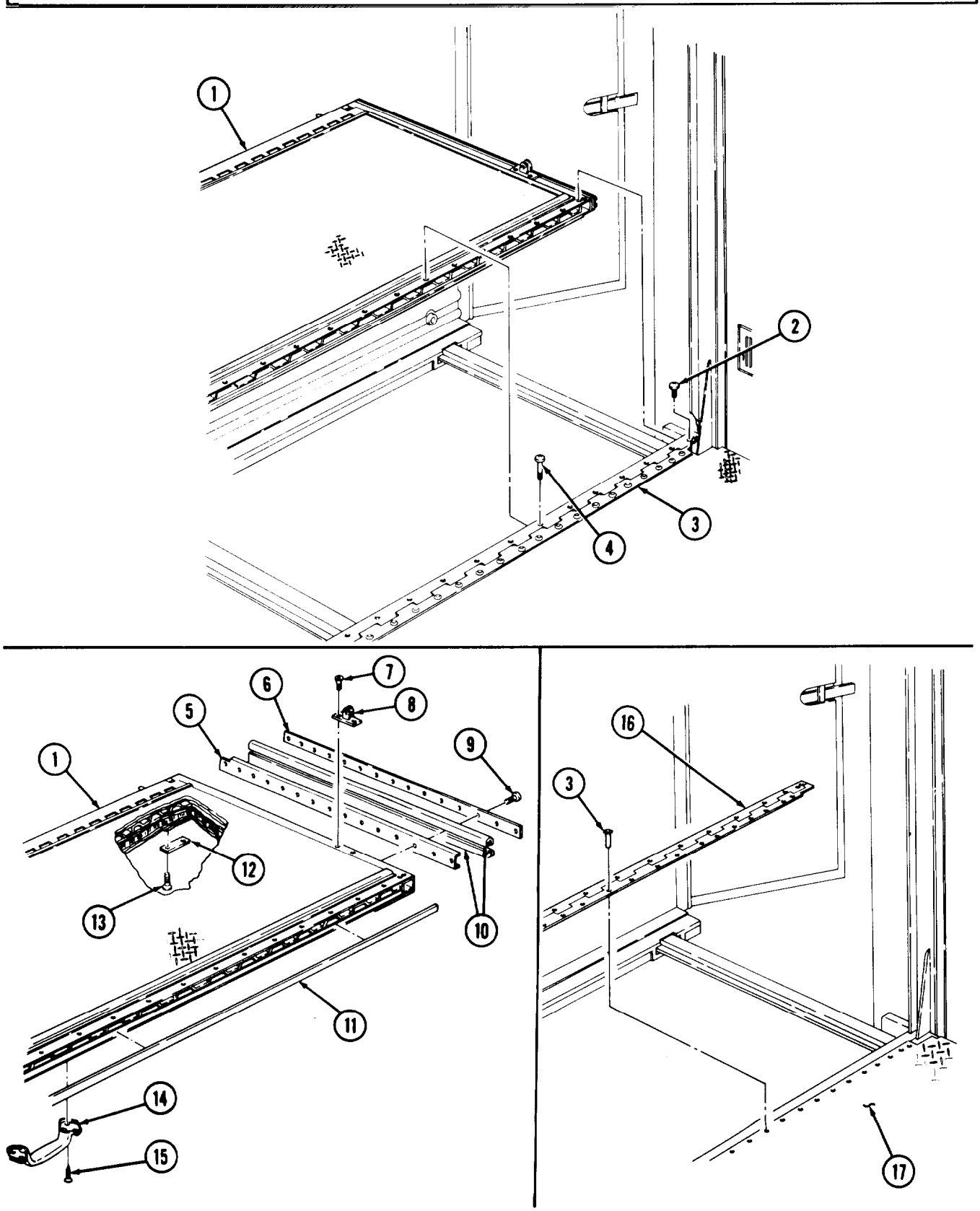

15-31. HINGED FLOOR MAINTENANCE (Contd)

c. Cleaning and Inspection

1. For general cleaning instructions, refer to para. 2-8.
2. For general inspection instructions, refer to para. 2-9.
3. Inspect hinge (1) for breaks, cracks, and smooth operation. Replace hinge (1) if damaged.
4. Inspect hinged floor (4) for cracked, broken, and tom floor plates. Repair (TM 9-237) or replace hinged floor (4) if damaged.
5. Inspect two retainers (6) and channels (5) for bends and breaks. Replace retainer(s) (6) or channel(s) (5) if bent or broken.

d. Assembly

NOTE

- Seal exterior joints with sealing compound.
- Insulate exterior joints and areas of metal-to-metal contact with adhesive.
- Perform step 1 if hinge was removed.

1. Install hinge (1) on underframe (3) with fifty-six new rivets 2).
2. Install new seal (11) on hinged floor (4).
3. Install handle (14) on hinged floor (4) with four screws (15).
4. Install five pads (12) on hinged floor (4) with ten screws (13).
5. Install two channels (5), four new seals (10), and two retainers (6) on hinged floor (4) with thirty screws (9).

NOTE

Perform step 6 for M820 and M820A2 vehicles.

6. Install two pivots (8) on hinged floor (4) with four screws (7).

e. Installation

NOTE

- Perform step 1 for M820 and M820A2 vehicles.
- Perform step 2 for M820A1 vehicles.
- Assistant will help with step 1 or 2.

1. Install hinged floor (4) on hinge (1) with four screws (16) and fifty-five screws (17).
2. Install hinged floor (4) on hinge (1) with fifty-nine screws (17).

15-31. HINGED FLOOR MAINTENANCE (Contd)

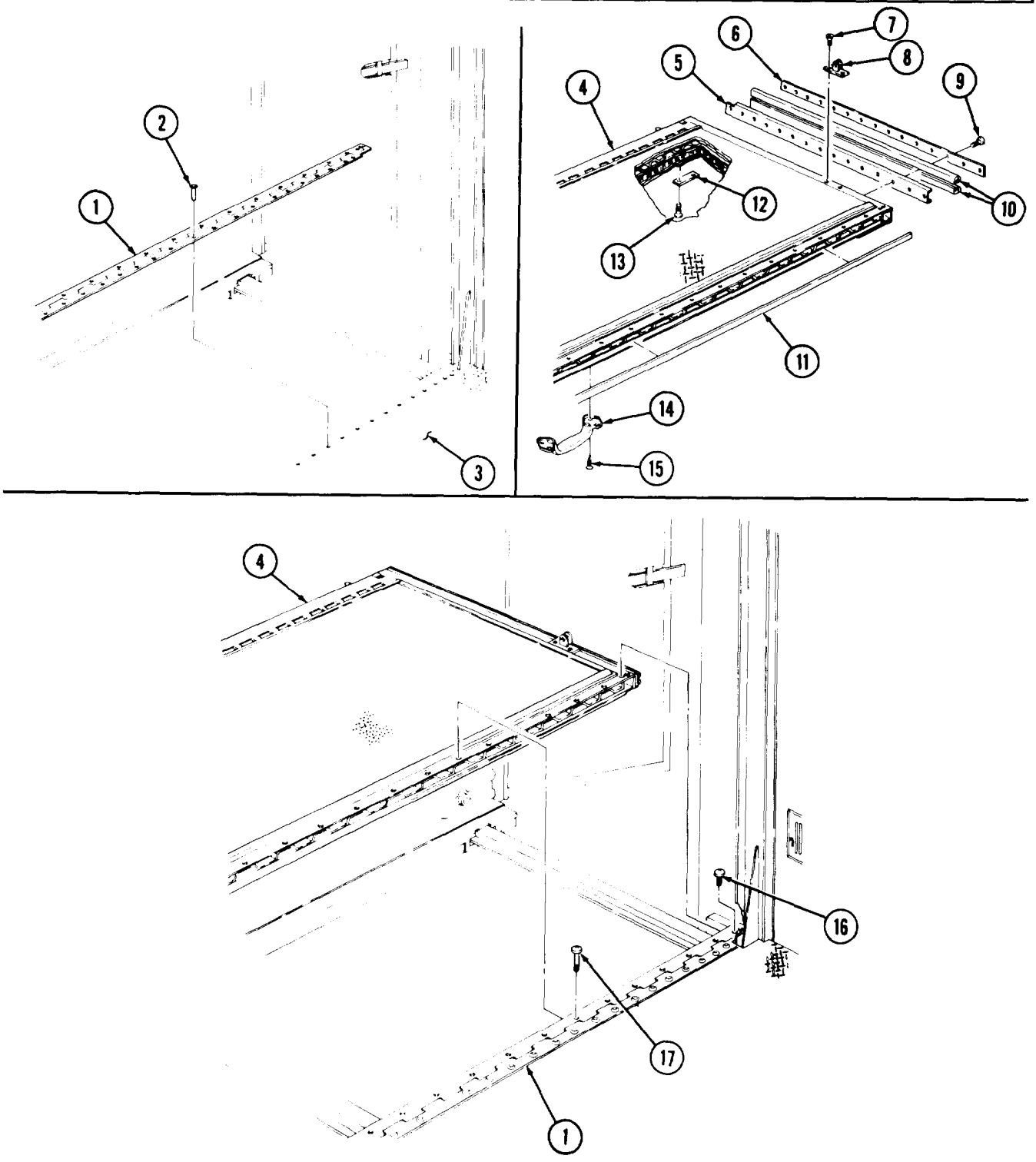

FOLLOW-ON TASKS:
- Install counterbalance (TM 9-2320-260-20).
- Close hinged end panel (TM 9-2320-260-10).
- Retract van body sides (TM 9-2320-260-10).

15-32. EXTERIOR SIDE PANEL MAINTENANCE

THIS TASK COVERS:

a. Disassembly
b. Cleaning and Inspection
c. Assembly

INITIAL SETUP

APPLICABLE MODELS
M820, M820A1, M820A2

TOOLS
General mechanic's tool kit (Appendix B, Item 1)
Rivet gun (Appendix B, Item 120)

MATERIALS/PARTS
Two hundred forty-eight rivets (Appendix D, Item 352)
Twenty-four rivets (Appendix D, Item 354)
One hundred eighty-nine rivets (Appendix D, Item 346)
Seven seals (Appendix D, Item 446)
Seal (Appendix D, Item 450)
Channel seal (Appendix D, Item 474)

MATERIALS/PARTS (Contd)
Adhesive (Appendix C, Item 2)
Sealing compound (Appendix C, Item 45)

REFERENCES (TM)
TM 9-2320-260-10
TM 9-2320-260-20
TM 9-2320-260-34P-2

EQUIPMENT CONDITION
- Van body sides fully expanded and secured (TM 9-2320-260-10).
- Retractable window removed (M820, M820A2) (TM 9-2320-260-20).
- Side panel lock removed (TM 9-2320-260-20).
- Side door removed (para. 15-29).

a. Disassembly

NOTE

Left and right exterior side panels are disassembled the same. This procedure covers the right exterior side panel.

1. Remove twenty-five screws (5) and retainers (3) and (15) from side panel frame (14).
2. Remove seals (2) and (4) and channel (1) from side panel frame (14). Discard seals (2) and (4).
3. Remove thirty screws (12) and five retainers (13) from seal (10) at side panel frame (14).
4. Remove sixty-two screws (11), six retainers (9), and seal (10) from side panel frame (14). Discard seal (10).
5. Remove six screws (8), two retainers (7), and seals (6) from side panel frame (14). Discard seals (6).

15-32. EXTERIOR SIDE PANEL MAINTENANCE (Contd)

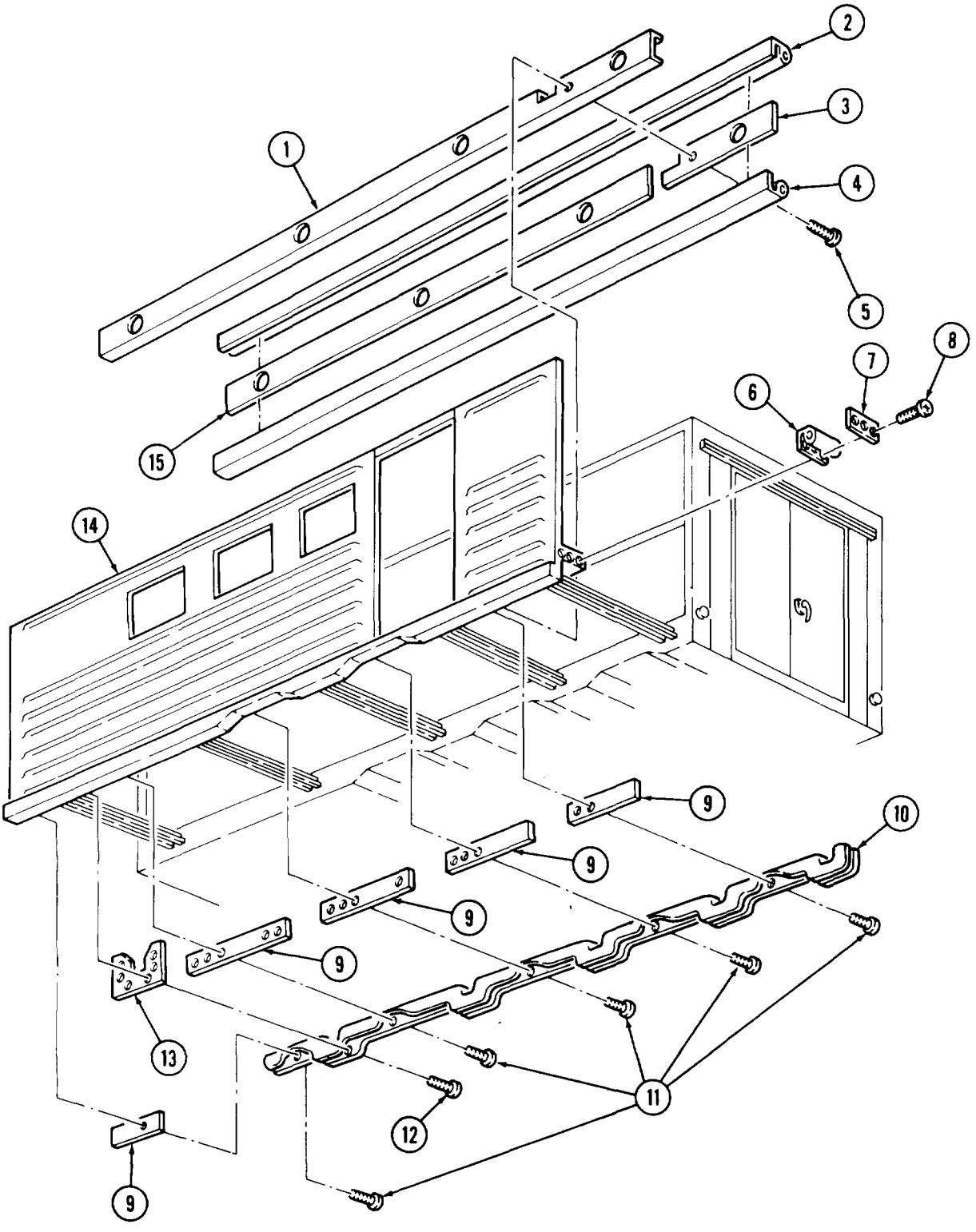

15-32. EXTERIOR SIDE PANEL MAINTENANCE (Contd)

6. Remove one hundred eighty-nine rivets (19), bracket (17), and seal (18) from skins (2) and (11) at side panel frame (8). Discard rivets (19) and seal (18).
7. Remove eighty-two screws (l), nuts (5), four screws (10), two retainers (4), and seals (3) from side panel frame (8). Discard seals (3).
8. Remove channel seal (9) from doorway of side panel frame (8). Discard channel seal (9).
9. Remove nine screws (6) and molding (7) from doorway of side panel frame (8).

NOTE

- Perform steps 10 through 12 if skin is to be replaced.
- ,Assistant will help with steps 10 through 12.

10. Remove two hundred forty-eight rivets (12) and skins (2) and (11) from side panel frame (8). Discard rivets (12).
11. Remove twenty-four rivets (16), and lower skin (13) from side panel frame (8). Discard rivets (16).
12. Remove eight screws (15) and two ladder hangers (14) from side panel frame (8).

15-32. EXTERIOR SIDE PANEL MAINTENANCE (Contd)

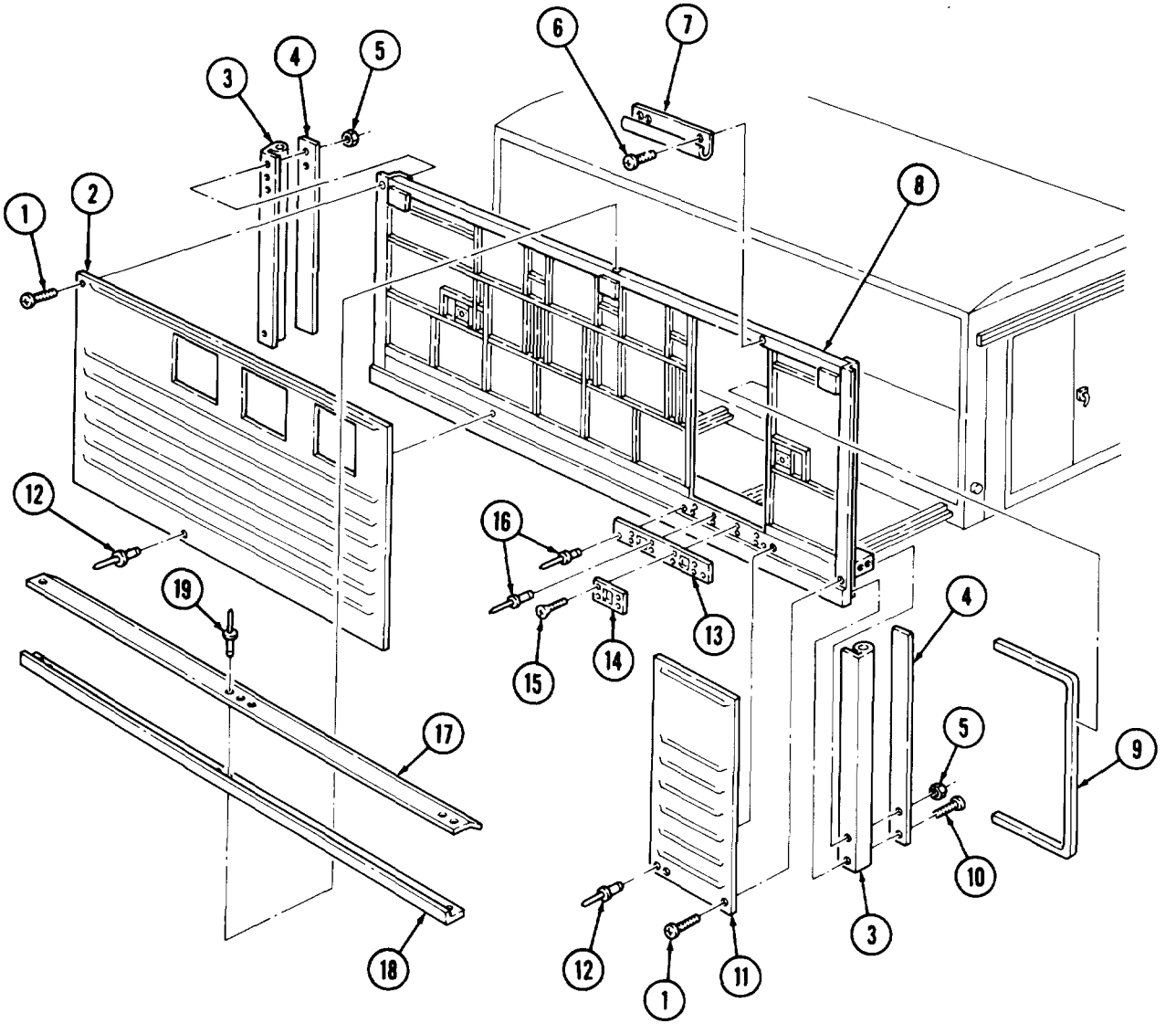

15-32. EXTERIOR SIDE PANEL MAINTENANCE (Contd)

b. Cleaning and Inspection

1. For general cleaning instructions, refer to para. 2-8.
2. For general inspection instructions, refer to para. 2-9.
3. Inspect five retainers (12), retainers (13), (5), and (6) for cracks and bends. Replace retainer(s) (12), (13), (5), or (6) if cracked or broken.
4. Inspect bracket (3), retainers (9) and (10), and channel (11) for rust corrosion and breaks. Replace bracket (3), retainer(s) (9) or (10), or channel (11) if rusted, corroded, or broken.
5. Inspect molding (4), two ladder hangers (8), and side panel frame (2) for cracks, breaks, and warpage. Replace molding (4), ladder hanger(s) (8) or side panel frame (2) if cracked, broken, or warped.
6. Inspect skins (1) and (14) and lower skin (7) for tears and punctures. Replace skin(s) (1) or (14) or lower skin (7) if torn or punctured.

c. Assembly

NOTE

- Left and right exterior side panels are assembled the same. This procedure covers the right exterior side panel.
- Perform steps 1 through 3 if skin was removed.
- Assistant will help with steps 1 through 3.

1. Install two ladder hangers (8) on side panel frame (2) with eight screws (23).
2. Install lower skin (7) on side panel frame (2) with twenty-four new rivets (24).
3. Install skins (1) and (14) on side panel frame (2) with two hundred forty-eight new rivets (22).

NOTE

- Apply sealing compound to exterior joints for installation.
- Apply adhesive to rubber and metal surfaces for installation.

4. Install molding (19) on doorway of side panel frame (2) with nine screws (18).
5. Install new channel seal (20) on doorway of side panel frame (2).
6. Install two new seals (16) and retainers (5) on side panel frame (2) with eighty-two screws (15), nuts (17), and four screws (21).
7. Install new seal (26) and bracket (25) on skins (1) and (14) and side panel frame (2) with one hundred eighty-nine new rivets (27).

15-32. EXTERIOR SIDE PANEL MAINTENANCE (Contd)

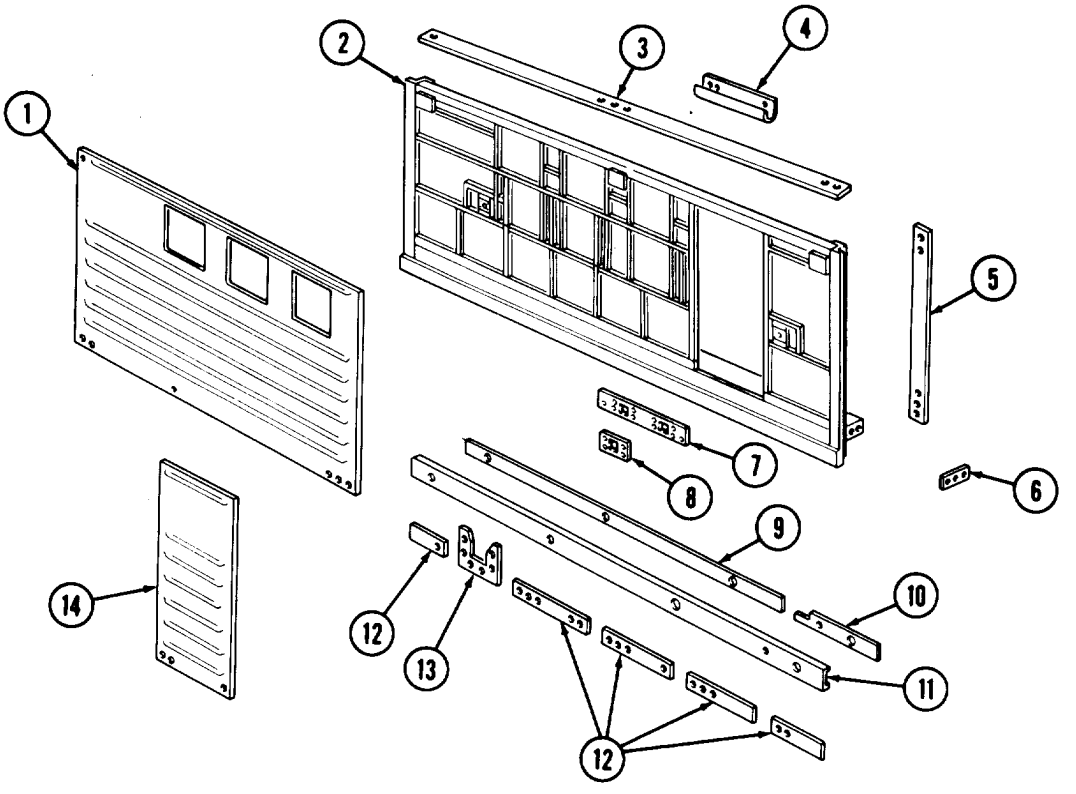

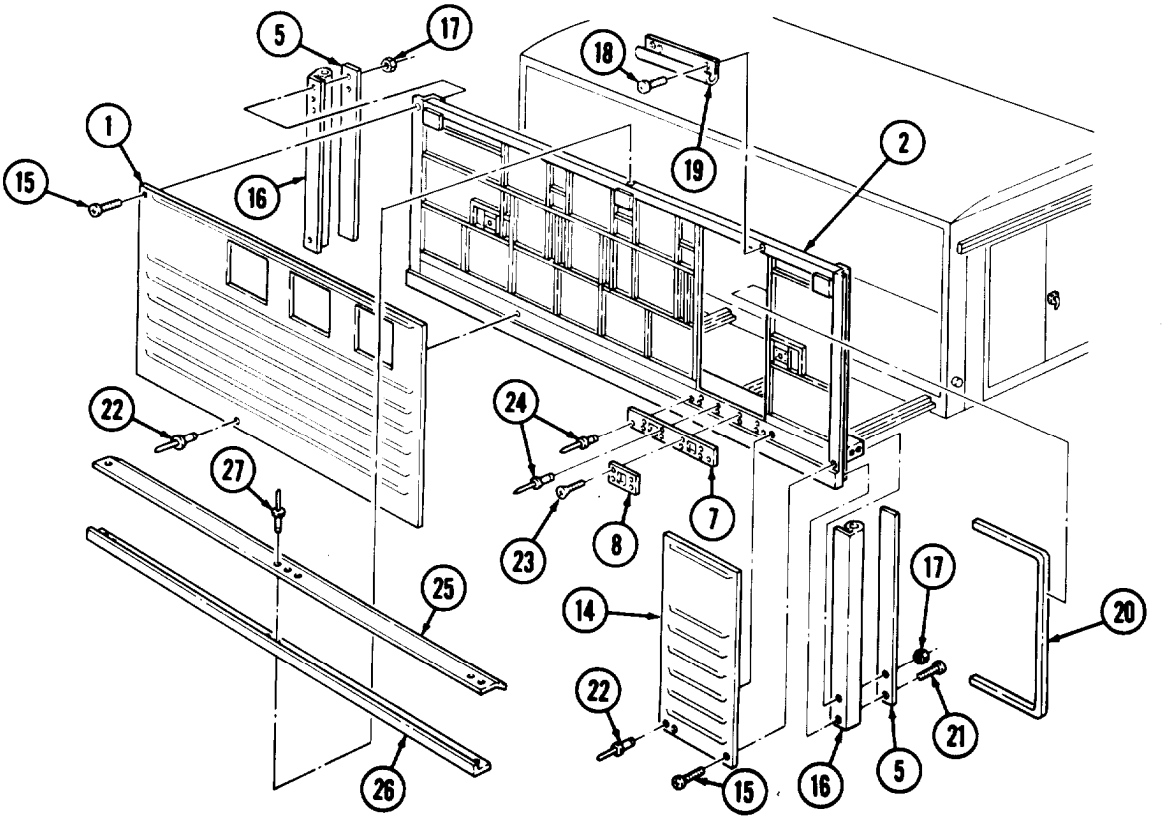

15-32. EXTERIOR SIDE PANEL MAINTENANCE (Contd)

8. Install two new seals (6) and retainers (7) on side panel frame (14) with six screws (8).
9. Install new seal (10) and six retainers (9) on side panel frame (14) with sixty-two screws (11).
10. Install five retainers (13) on side panel frame (14) and new seal (10) with thirty screws (11),

NOTE

New seals may need to be formed to fit on side panel frame.

11. Install channel (1), new seals (2) and (4), retainer (3), and retainer (15) on side panel frame (14) with twenty-five screws (5).

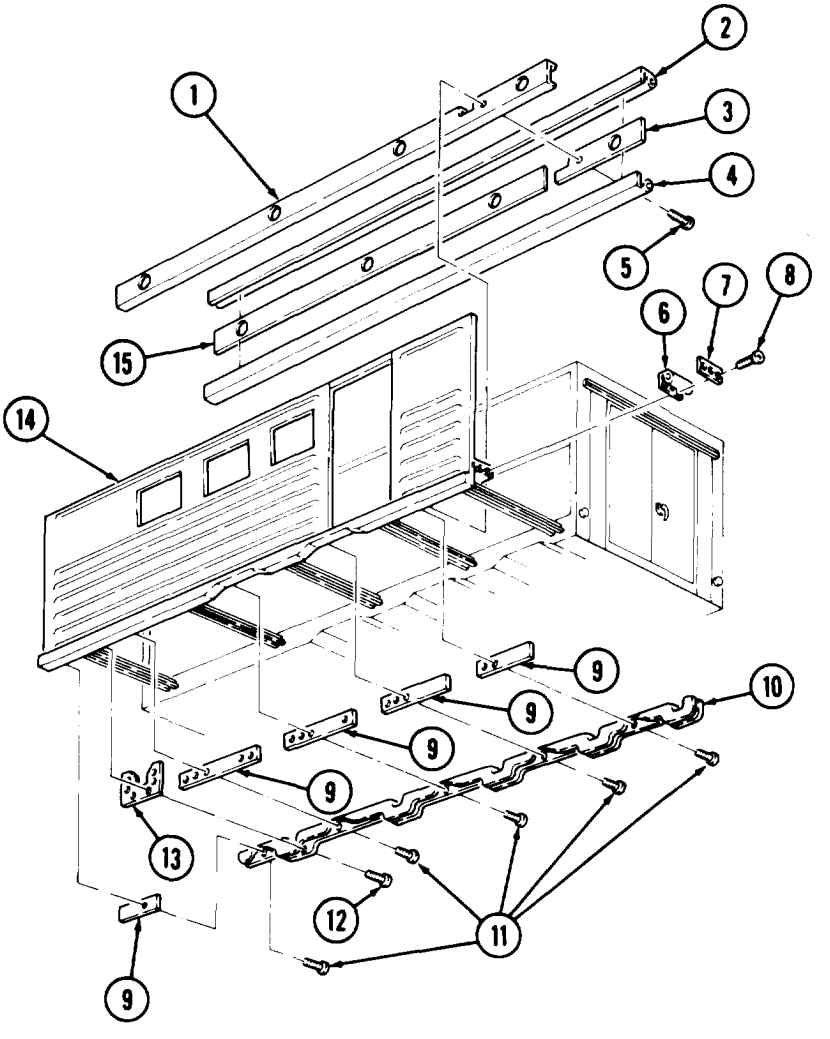

FOLLOW-ON TASKS:
- Install side door (para. 15-29).
- Install side panel lock (TM 9-2320-260-20).
- Install retractable window (M820, M820A2) (TM 9-2320-260-20).
- Retract van body sides (TM 9-2320-260-10).

15-33. HINGED END PANEL MAINTENANCE

THIS TASK COVERS:

a. Removal
b. Disassembly
c. Cleaning and Inspection
d. Assembly
e. Installation

INITIAL **SETUP**

APPLICABLE MODELS
M820, M820A1, M820A2

TOOLS
General mechanic's tool kit (Appendix B, Item 1)
Rivet gun (Appendix B, Item 120)

MATERIALS/PARTS
Eighteen rivets (Appendix D, Item 352)
Twelve rivets (Appendix D, Item 356)
Seal (Appendix D, Item 445)
Seal (Appendix D, Item 446)

MATERIALS/PARTS (Contd)
Seal (Appendix D, Item 452)
Sealing compound (Appendix C, Item 45)

REFERENCES (TM)
TM 9-2320-260-10
TM 9-2320-260-34P-2

EQUIPMENT CONDITION
- Parking brake set (TM 9-2320-260-10).
- Van body sides fully expanded and secured (TM 9-2320-260-10).

NOTE

All hinged end panels are maintained the same. This procedure covers the right-rear hinged end panel.

a. Removal

NOTE

Assistant will help with removal.

Remove sixteen screws (3) and hinged end panel (2) from side panel (1).

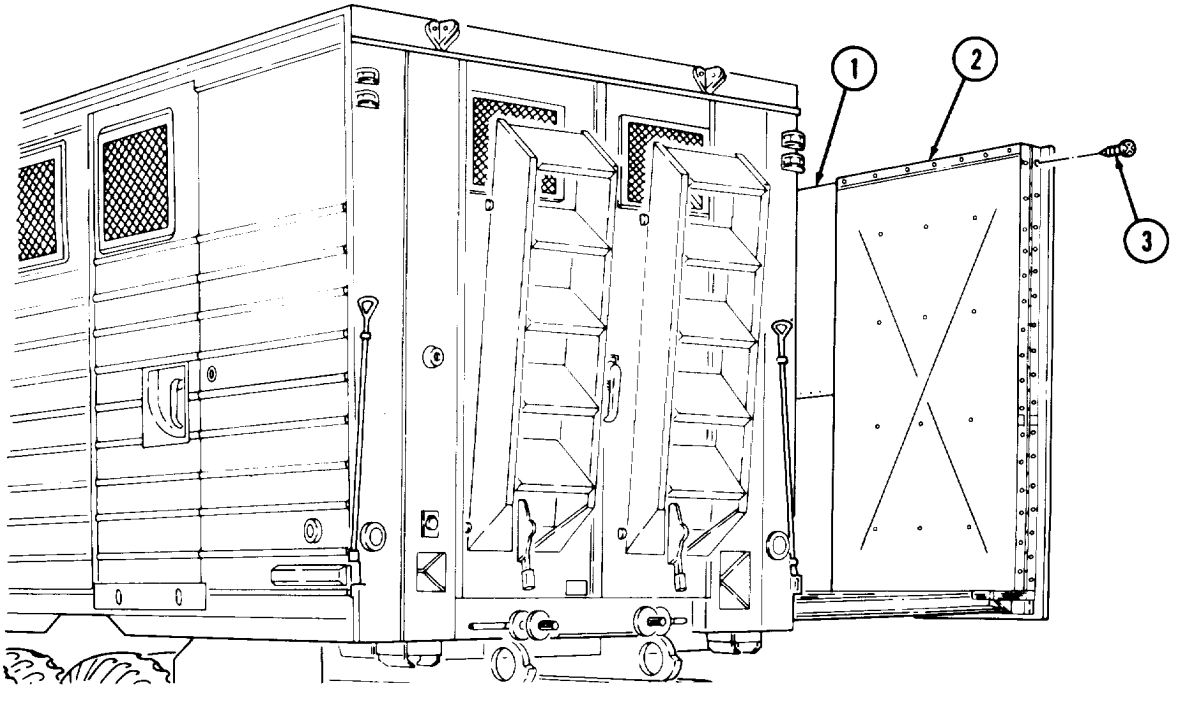

15-33. HINGED END PANEL MAINTENANCE (Contd)

b. Disassembly

1. Remove sixteen screws (18), hinge (19), and seal (20) from panel frame (7) and outer skin (12). Discard seal (20).
2. Remove twenty-seven screws (9), retainer (10), and seal (8) from panel frame (7) and outer skin (12). Discard seal (8).
3. Remove ten screws (1), retainers (2) and (3), and seal (4) from channel (5). Discard seal (4).
4. Remove eighteen rivets (6), twenty screws (17), and channels (5) and (16) from outer skin (12), panel frame (7), and inner skin (22). Discard rivets (6).
5. Remove two screws (15), strap (14), and spacer plate (13) from outer skin (12).

NOTE

l Perform steps 6 and 7 if skins are to be replaced

l Assistant will help with steps 6 and 7.

6. Remove twelve rivets (11) and outer skin (12) from panel frame (7). Discard rivets (11).
7. Remove thirty screws (23), eighteen screws (21), and inner skin (22) from panel frame (7).

c. Cleaning and Inspection

1. For general cleaning instructions, refer to para. 2-8.
2. For general inspection instructions, refer to para, 2-9.
3. Inspect channels (5) and (16), retainers (2), (3), and (10), spacer plate (13), panel frame (7), and strap (14) for bends, breaks, and cracks. Replace part(s) if damaged.
4. Inspect hinge (19) for cracks, breaks, corrosion, and proper operation. Replace hinge (19) if damaged.
5. Inspect inner skin (22) and outer skin (12) for tears and punctures, Replace inner skin (22) or outer skin (12) if torn or punctured.
6. Inspect panel frame (7) for cracks, breaks, and warpage. Replace hinged end panel if panel frame (7) is damaged.

15-33. HINGED END PANEL MAINTENANCE (Contd)

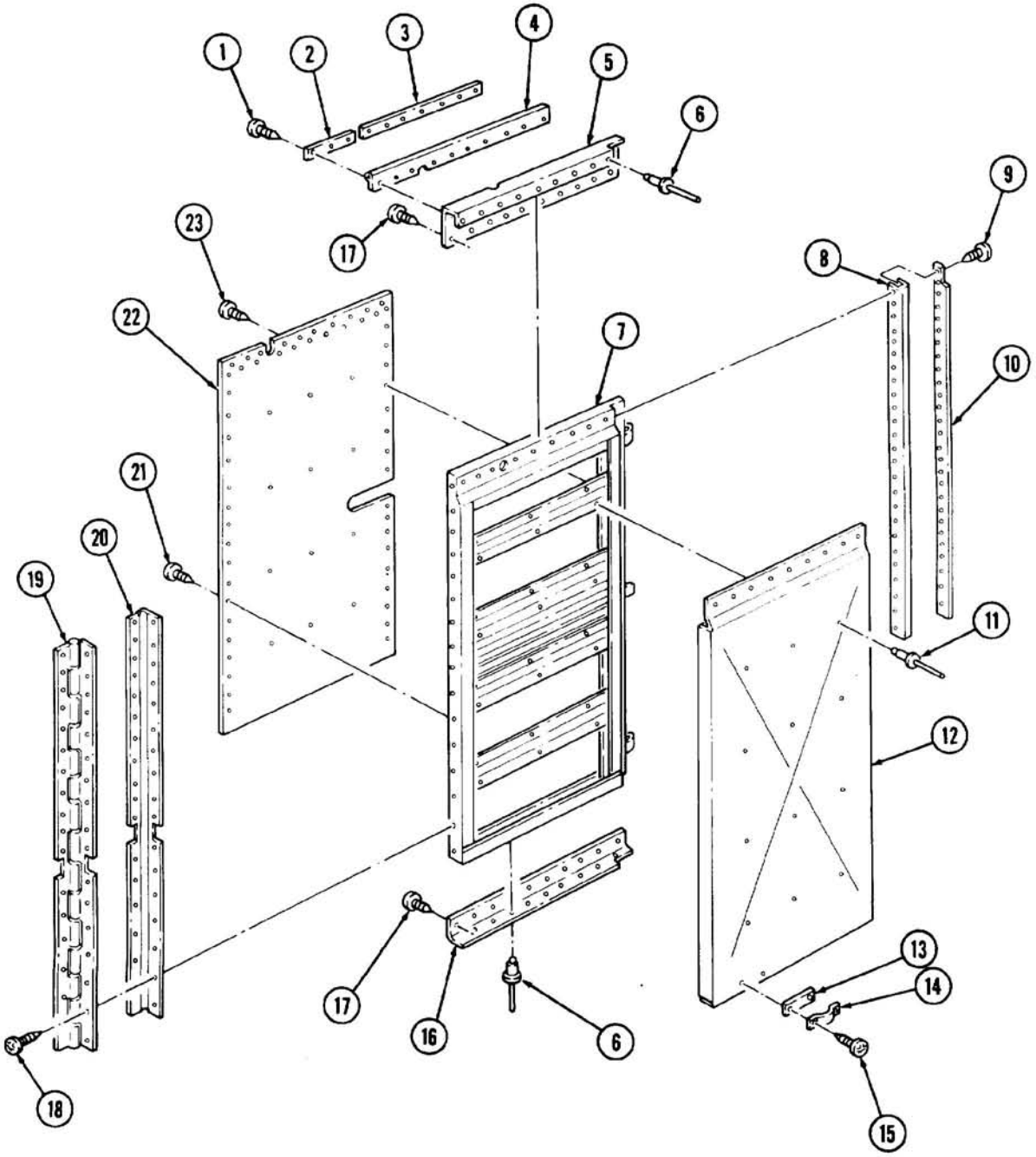

15-33. HINGED END PANEL MAINTENANCE (Contd)

d. Assembly

NOTE

- All hinged end panels are assembled the same. This procedure covers the right-rear hinged end panel.
- Seal all exterior joints with sealing compound.
- Perform steps 1 and 2 if skins were removed.
- Assistant will help with steps 1 and 2.

1. Install inner skin (22) on panel frame (7) with thirty screws (23) and eighteen screws (2 1).
2. Install outer skin (12) on panel frame (7) with twelve new rivets (11).
3. Install spacer plate (13) and strap (14) on outer skin (12) with two screws (15).
4. Install channels (5) and (16) on outer skin (12), panel frame (7), and inner skin (22) with eighteen new rivets (6) and twenty screws (17).
5. Install new seal (4) and retainers (2) and (3) on channel (5) with ten screws (1).
6. Install new seal (8) and retainer (10) on outer skin (12) and panel frame (7) with twenty-seven screws (9).
7. Install new seal (20) and hinge (19) on outer skin (12) and panel frame (7) with sixteen screws (18).

e. Installation

Install hinged end panel (25) on side panel (24) with sixteen screws (26).

15-33. HINGED END PANEL MAINTENANCE (Contd)

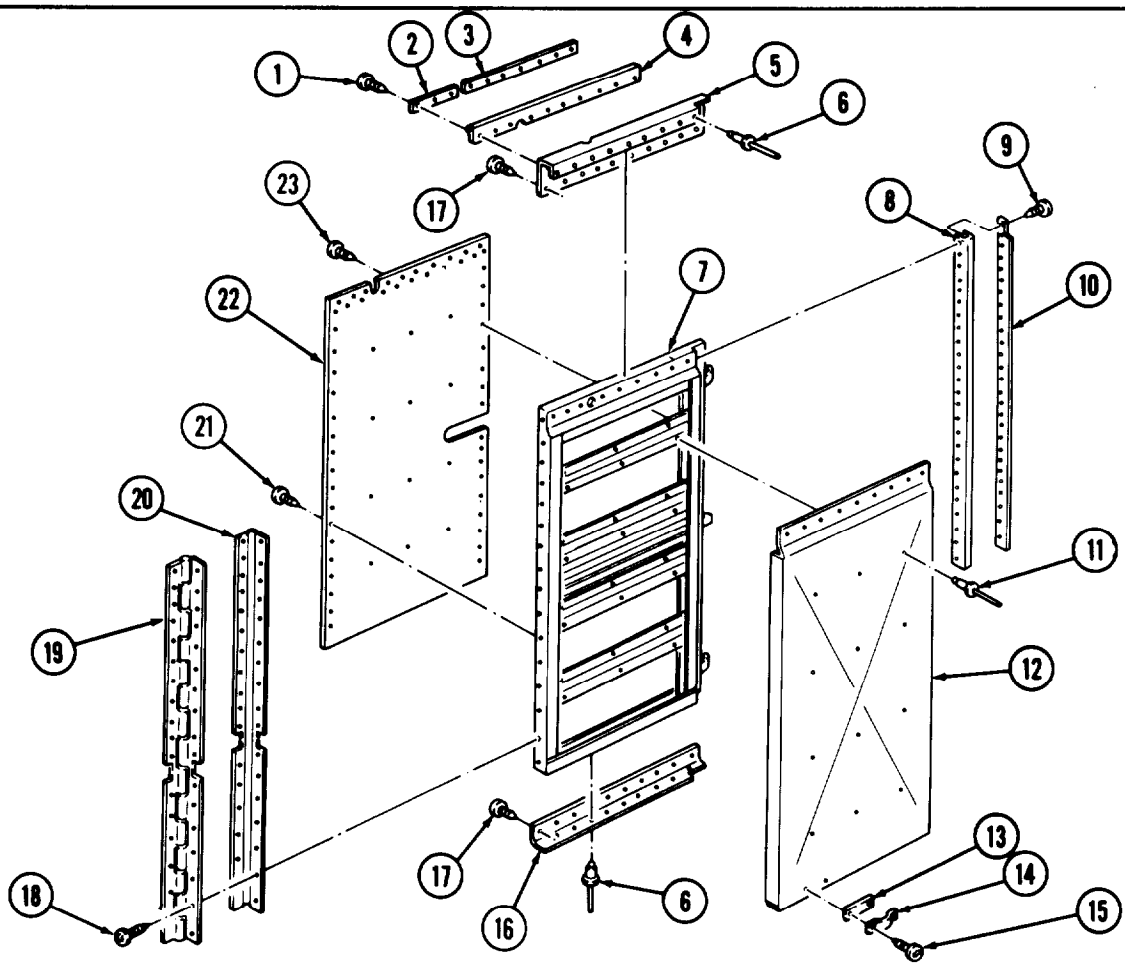

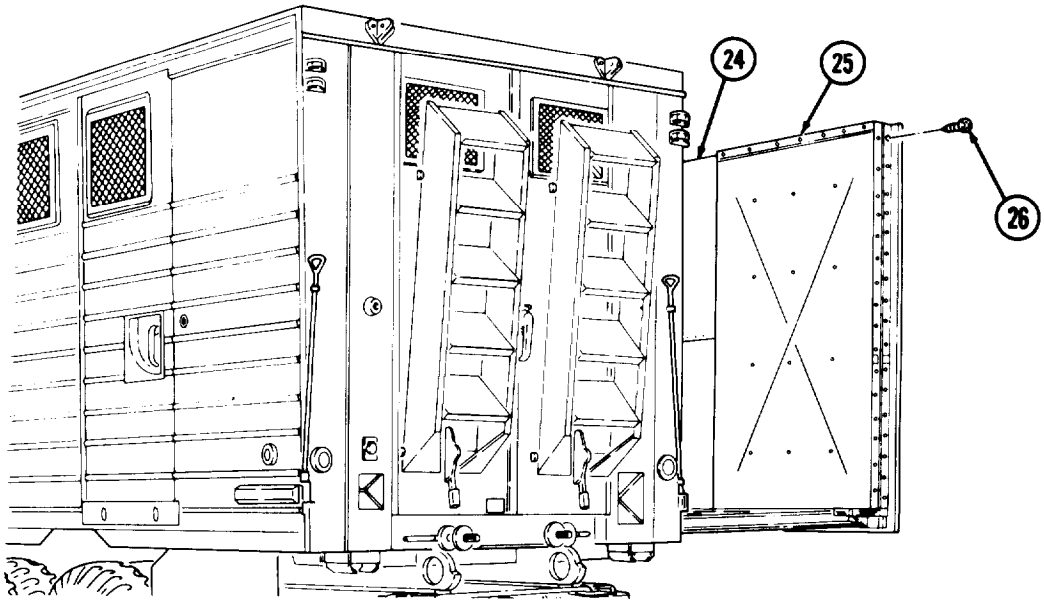

FOLLOW-ON TASK: Retract van body sides (TM 9-2320-260-10).

15-34. REAR WALL INTERIOR PANELS REPLACEMENT

THIS TASK COVERS:

a. Left Panel Removal **b. Left Panel Installation**

INITIAL SETUP

APPLICABLE MODELS
M820, M820A1, M820A2

TOOLS
General mechanic's tool kit (Appendix B, Item 1)

MATERIALS/PARTS
Sealing compound (Appendix C, Item 45)

REFERENCES (TM)
TM 9-2320-260-10
TM 9-2320-260-20
TM 9-2320 -260-34P-2

EQUIPMENT CONDITION
- Van body sides fully expanded and secured (TM 9-2320-260- 10).
- Load center removed (M820, M820A2) (left side) (para. 15-82).

EQUIPMENT CONDITION (Contd)
- Load center conduit removed (M820, M820A2) (left side) (para. 15-83).
- Electrical box removed (M820, M820A2) (left side) (para. 15-90).
- Control center box removed (M820, M820A2) (right side) (para. 15-84).
- AC manual starter switches removed (M820, M820A2) (right side) (para. 15-89).
- Phone jacks removed (M820, M820A2) (right side) (TM 9-2320-260-20).
- Fire extinguisher removed (right side) (TM 9-2320-260-10).

GENERAL SAFETY INSTRUCTIONS
Gloves, eyeshields, and dust mask must be worn during panel replacement.

WARNING

Van body is insulated with fibrous glass felt insulation. Gloves, eyeshields, and dust mask must be worn during panel replacement. Failure to do so may result in injury to personnel.

NOTE

Left- and right-rear wall interior panels are replaced the same. This procedure covers the left-rear wall interior panel.

a. Left Panel Removal

1. Remove thirteen screws (4) and molding (1) from left panel (2) and header (3).

NOTE

Assistant will help with step 2.

2. Remove twenty-two screws (5) and left panel (2) from header (3).
3. Remove four screws (8) and corner gusset (7) from skin (6) and underframe (9).

b. Left Panel Installation

NOTE

Apply sealing compound to exterior joints for installation.

1. Install corner gusset (7) on skin (6) and underframe (9) with four screws (8).

NOTE

Assistant will help with step 2.

2. Install left panel (2) on header (3) with twenty-two screws (5).
3. Install molding (1) on left panel (2) and header (3) with thirteen screws (4).

15-34. REAR WALL INTERIOR PANELS REPLACEMENT (Contd)

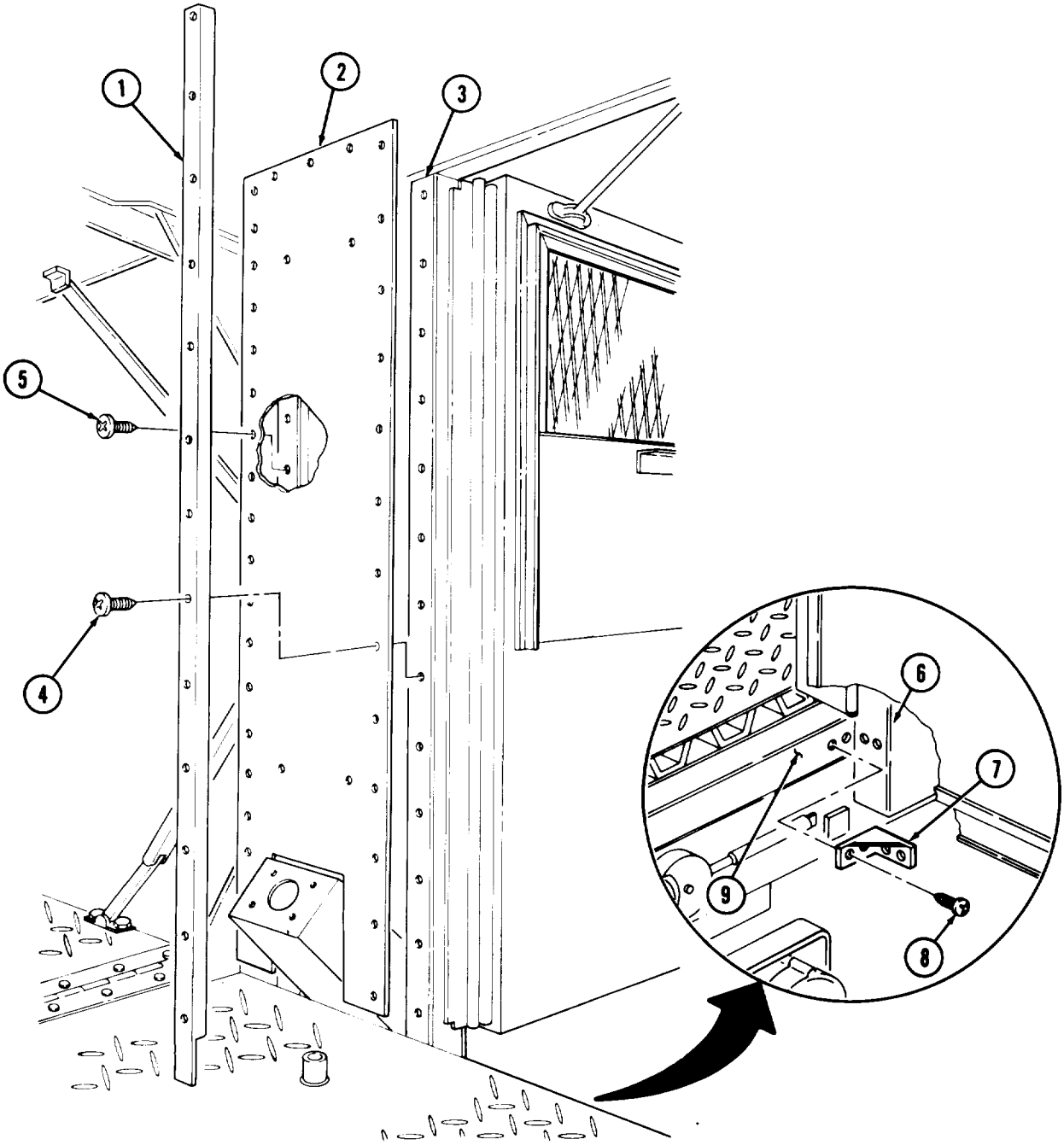

FOLLOW-ON TASKS:
- Install fire extinguisher (right side) (TM 9-2320-260-10).
- Install phone jacks (M820, M820A2) (right side) (TM 9-2320-260-20).
- Install AC manual starter switches (M820, M820A2) (right side) (para, 15-89).
- Install control center box (M820, M820A2) (right side) (para, 15-84).
- Install electrical box (M820, M820A2) (left side) (para. 15-90).
- Install load center conduit (M820, M820A2) (left side) (para. 15-83).
- Install load center (M820, M820A2) (left side) (para. 15-82).
- Retract van body sides (TM 9-2320-260-10).

15-35. INTERIOR SIDE PANELS AND LATCHES REPLACEMENT

THIS TASK COVERS:

a. Removal **b. Installation**

INITIAL SETUP

APPLICABLE MODELS
M820, M820A1, M820A2

TOOLS
General mechanic's tool kit
(Appendix B, Item 1)

MATERIALS/PARTS
Four cotter pins (Appendix D, Item 43)
Two gaskets (Appendix D, Item 104)
Eight lockwashers (Appendix D, Item 247)
Two lockwashers (Appendix D, Item 224)
Four locknuts (Appendix D, Item 196)
Two O-rings (M820, M820A2)
(Appendix D, Item 295)
Two O-rings (M820A1) (Appendix D, Item 297)
Three rubber bumpers (Appendix D, Item 369)
Four rubber bumpers (Appendix D, Item 368)
Primer (Appendix C, Item 31)
Sealing compound (Appendix C, Item 43)

MATERIALS/PARTS (Contd)
Adhesive (Appendix C, Item 2)
Fibrous glass felt insulation (Appendix C, Item 16)

REFERENCES (TM)
TM 9-2320-260-10
TM 9-2320 -260-34P-2

EQUIPMENT CONDITION
- Parking brake set (TM 9-2320-260-10).
- Van body sides fully expanded and secured (TM 9-2320-260-10).
- Hinged end panels removed (para. 15-33).
- Hinged floor removed (para. 15-31).
- Hinged roof removed (para. 15-37).
- Side doors removed (para. 15-29).

GENERAL SAFETY INSTRUCTIONS
Gloves, eyeshields, and dust mask must be worn during panel replacement.

WARNING

Van body is insulated with fibrous glass felt insulation. Gloves, eyeshields, and dust mask must be worn during panel replacement. Failure to do so may result in injury to personnel.

a. Removal

NOTE

Left and right interior side panels are removed the same. This procedure covers the right interior side panel.

1. Remove six screws (1) and three hooks (2) from side panel frame (4).
2. Remove six screws (7) and three clips (3) from side panel frame (4).
3. Remove two screws (8) and striker (9) from side panel frame (4).
4. Remove two screws (11), lockwashers (12), nuts (5), and door check (10) from door angle (6). Discard lockwashers (12).
5. Remove two screws (13), striker (14), and two spacer plates (15) from side panel frame (4).

15-35. INTERIOR SIDE PANELS AND LATCHES REPLACEMENT (Contd)

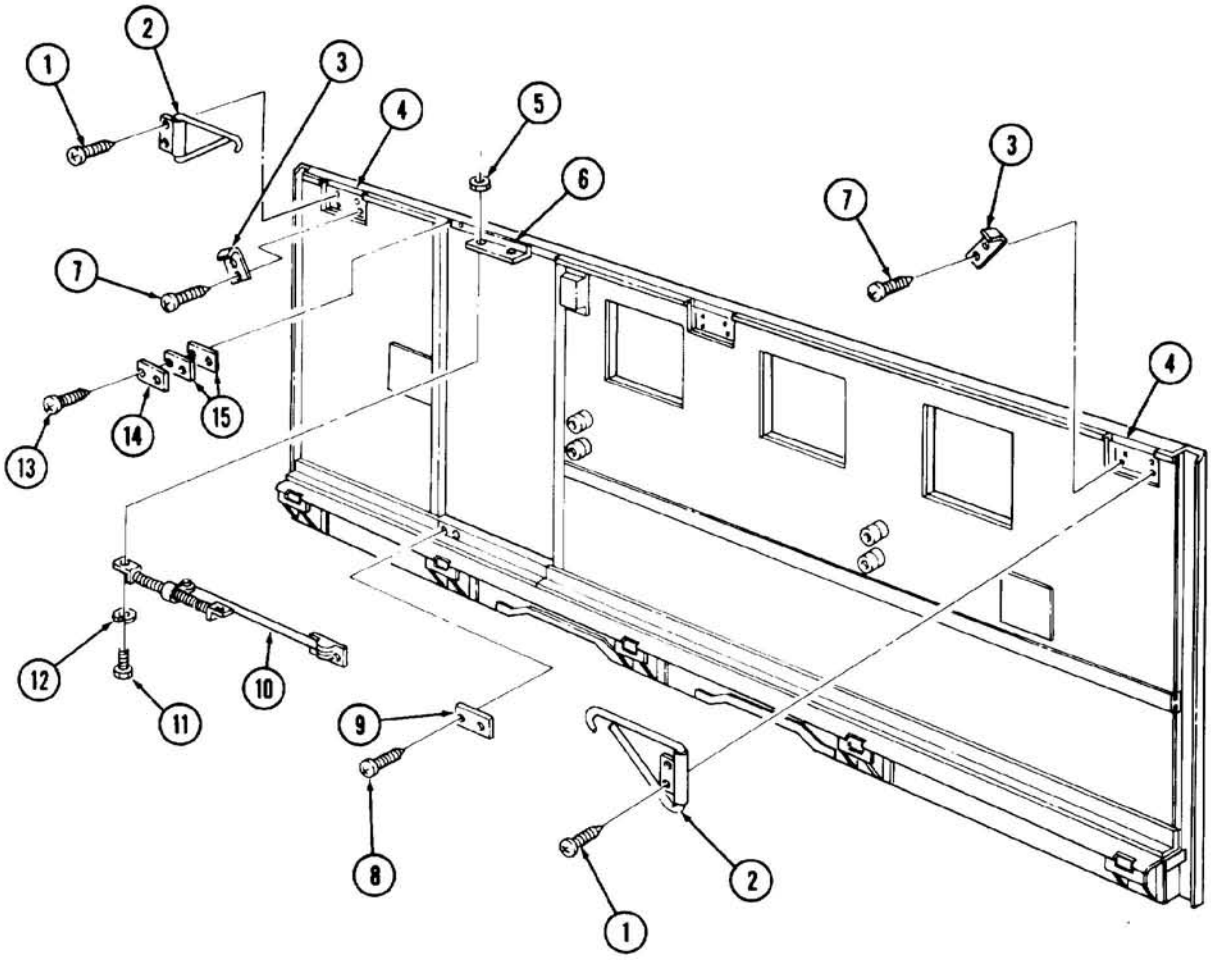

15-35. INTERIOR SIDE PANELS AND LATCHES REPLACEMENT (Contd)

6. Remove two screws (2) and rubber bumpers (3) from side panel frame (1). Discard rubber bumpers (3).
7. remove four screws (11) and two clips (12) from panel (13).
8. Remove four screws (17), washers (16), and rubber bumpers (18) from wood spacers (19) and panel (6). Discard rubber bumpers (18).
9. Remove eight screws (15) and four wood spacers (19) from panel (6).

NOTE

Perform step 10 for M820 and M820A2 vehicles.

10. Remove eight screws (20) and four hangers (21) from panel (6).
11. Remove four screws (23) and junction box (24) from panel (6).
12. Remove eight screws (7) and plate (8) from panel (6).
13. Remove thirteen screws (22) and molding (25) from panel (6).

NOTE

Assistant will help with steps 14 and 15

14. Remove thirty-three screws (10) and panel (13) from side panel frame (1).
15. Remove fifty-eight screws (9), molding (14), and panel (6) from side panel frame (1).
16. Remove mouldings (26), (4), and (5) from panel (6).
17. Remove two moldings (27), moldings (28), and moldings (29) from panel (6).

15-35. INTERIOR SIDE PANELS AND LATCHES REPLACEMENT (Contd)

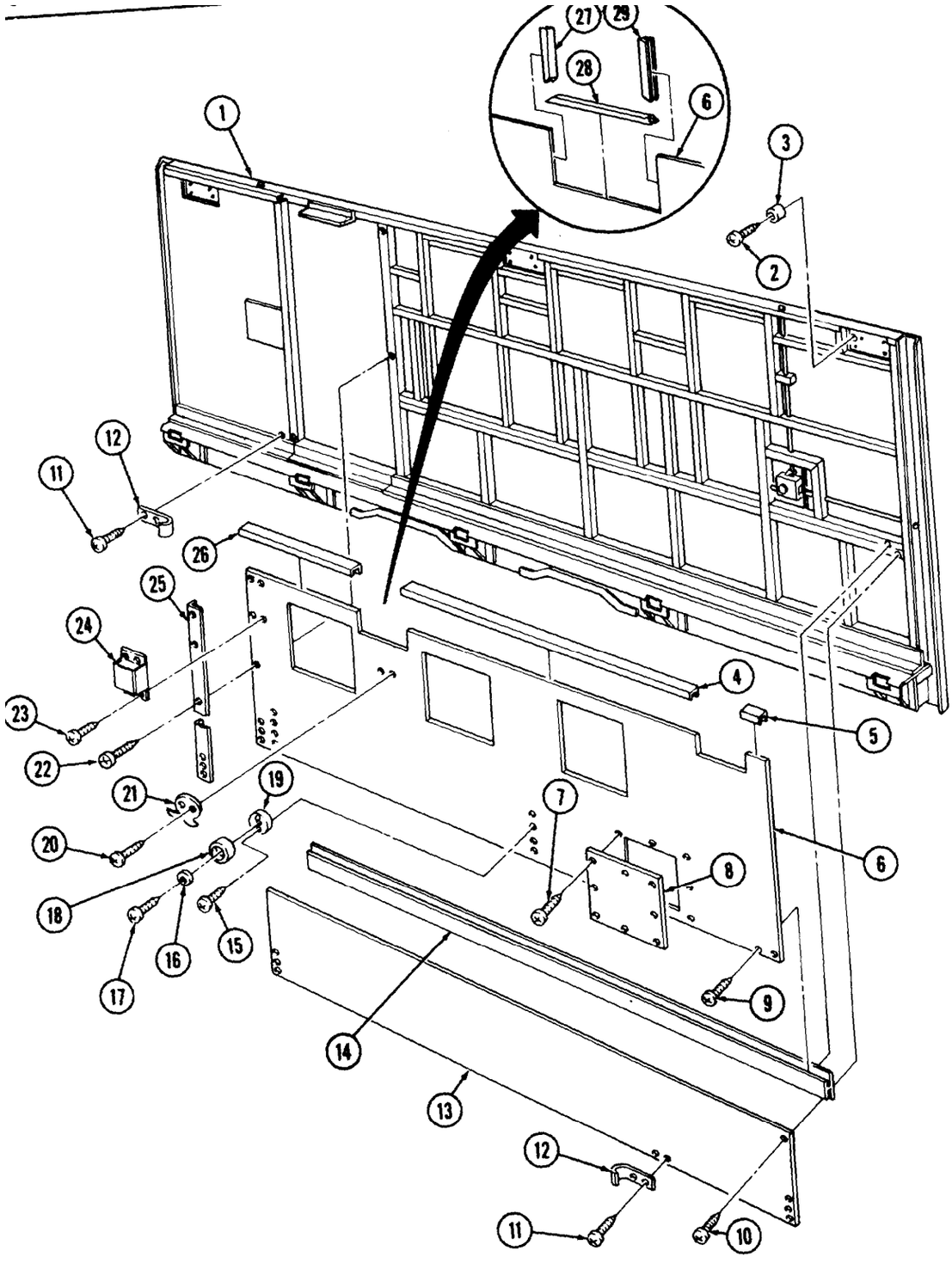

15-35. INTERIOR SIDE PANELS AND LATCHES REPLACEMENT (Contd)

18. Remove eight screws (15) and plate (14) from panel (16).

NOTE

Assistant will help with step 19.

19. Remove thirty-three screws (13), moldings (27), (28), (29), (17), (18), and (12), and panel (16) from side panel frame (4).
20. Remove nut (20) and washer (21) from shank (5) and latch (22).
21. Remove two *screws* (7), plate (8), gasket (9), shank (5), and O-ring (6) from latch (22). Discard gasket (9) and O-ring (6).
22. Remove two cotter pins (23), pins (19), clevis (24) and (26) from latch (22). Discard cotter pins (23).
23. Remove four nuts (11), lockwashers (10), and latch (22) from side panel frame (4). Discard lockwashers (10).
24. Remove two screws (31) and retainer (30) from side panel frame (4).
25. Remove clevis (26) and flush bolt (3) from side panel frame (4).
26. Remove clevis (24) and horizontal bar (25) from side panel frame (4).
27. Remove left latch (steps 18 through 26).
28. Remove screw (1) and rubber bumper (2) from side panel frame (4). Discard rubber bumper (2).

15-35. INTERIOR SIDE PANELS AND LATCHES REPLACEMENT (Contd)

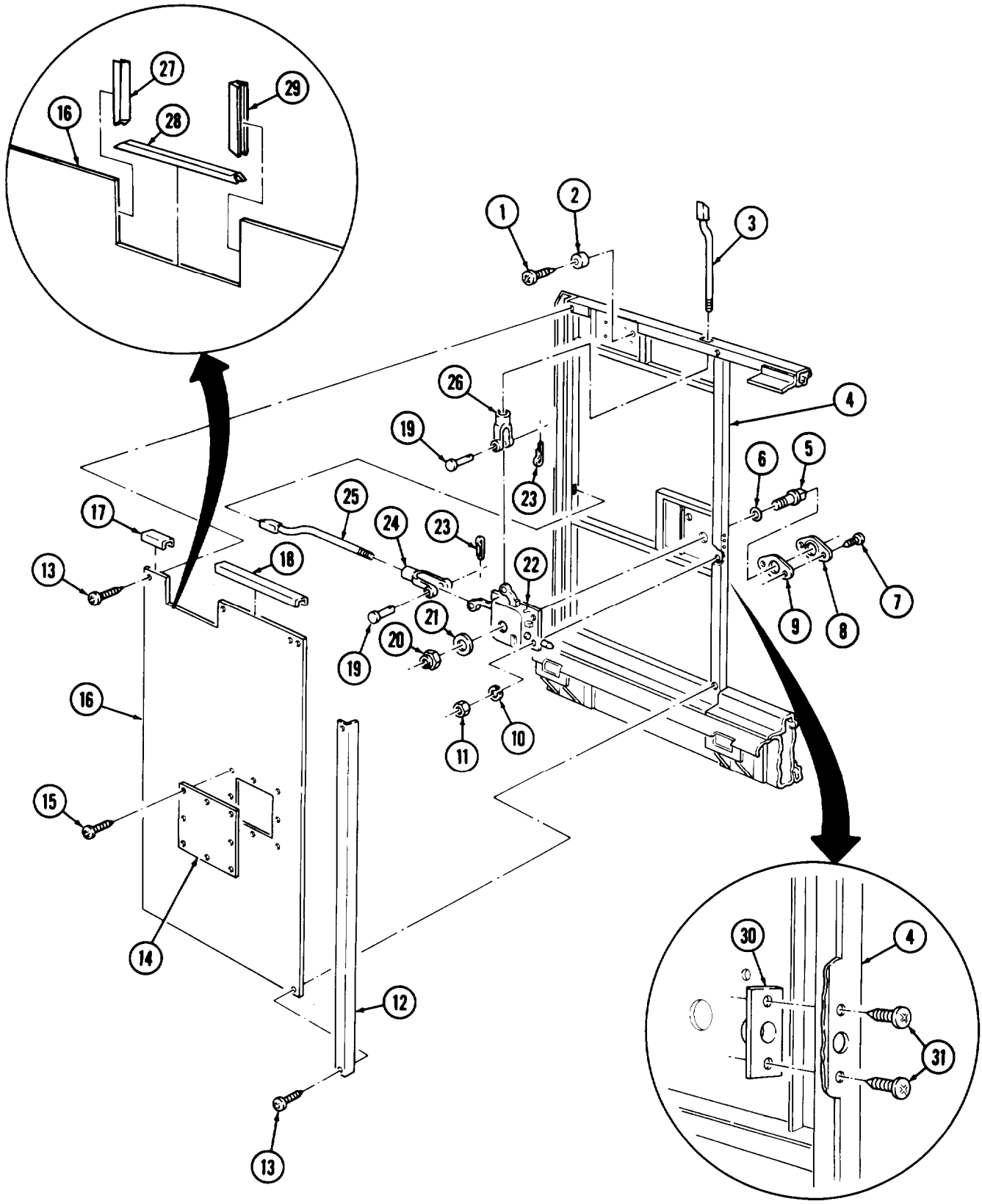

15-35. INTERIOR SIDE PANELS AND LATCHES REPLACEMENT (Contd)

b. Installation

NOTE

- Left and right latches are installed the same. This procedure covers the right side.
- Insulate areas of dissimilar metal-to-metal contact with zinc chromate primer.
- Seal area between exterior joints with sealing compound.
- Apply adhesive to rubber and metal surfaces.

1. Install new rubber bumper (2) on side panel frame (4) with screw (1).
2. Install retainer (30) on side panel frame (4) with two screws (31).
3. Install horizontal bar (25) and flush bolt (3) in side panel frame (4).
4. Install clevis (24) on horizontal bar (25).
5. Install clevis (26) on flush bolt (3).
6. Install latch (22) on side panel frame (4) with four new lockwashers (10) and nuts (11).
7. Install clevises (24) and (26) on latch (22) with two pins (19) and new cotter pins (23).
8. Install new O-ring (6), shank (5), new gasket (9), and plate (8) on latch (22) with two screws (7).
9. Install washer (21) and nut (20) on shank (5) and latch (22).
10. Install left latch (22) (steps 2 through 9).

NOTE

- Insulate entire structure with fibrous glass felt insulation,
- Assistant will help with step 11.

11. Position moldings (27), (28), (29), (17), (18), and (12) on panel (16).
12. Install panel (16) on side panel frame (4) with thirty-three screws (13).
13. Install plate (14) on panel (16) with eight screws (15).

15-35. INTERIOR SIDE PANELS AND LATCHES REPLACEMENT (Contd)

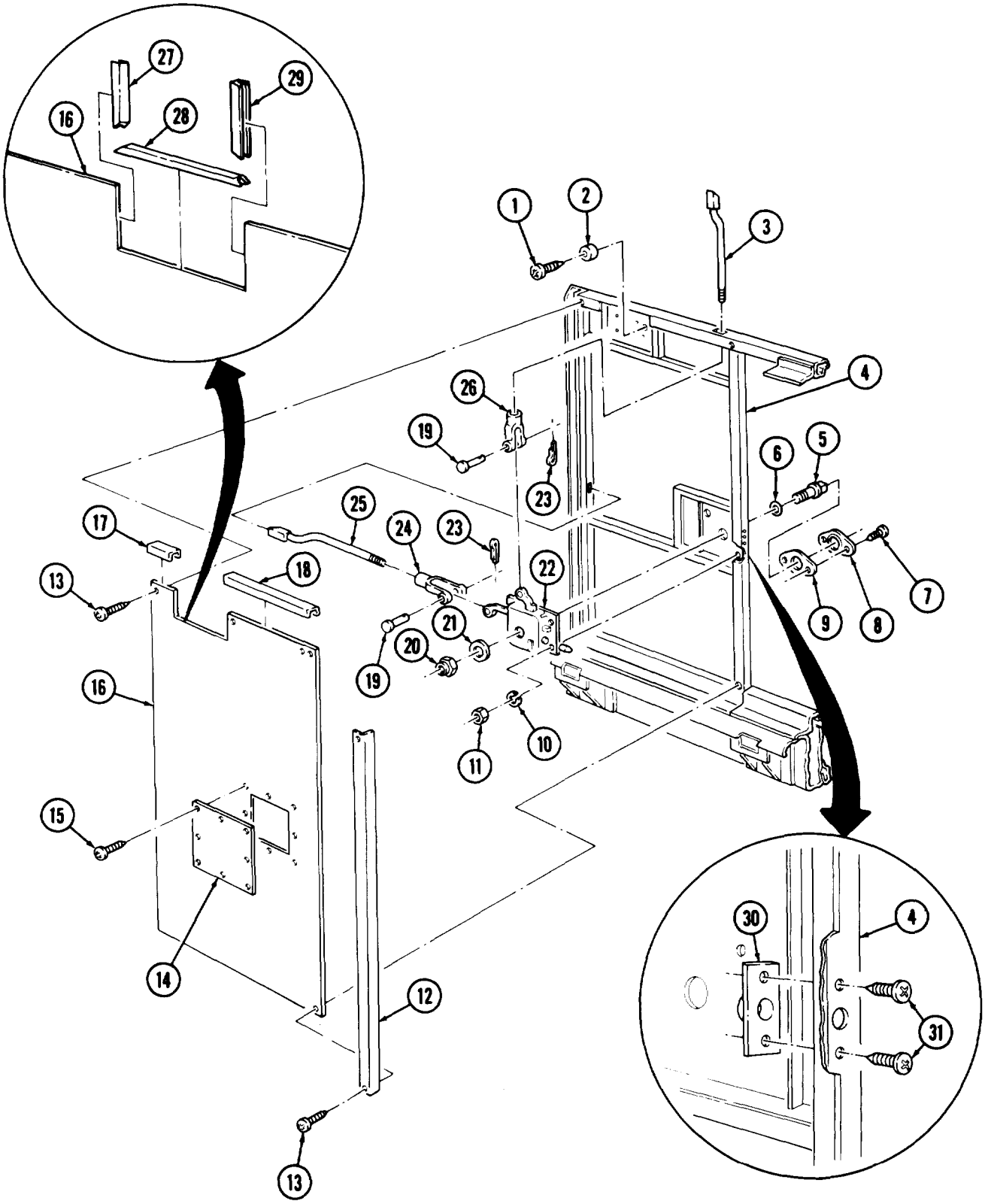

15-35. INTERIOR SIDE PANELS AND LATCHES REPLACEMENT (Contd)

14. Install two moldings (27), moldings (28), and moldings (29) on panel (6).
15. Install moldings (4), (5), and (26) on panel (6).

NOTE

- Insulate entire structure with fibrous glass felt insulation.
- Assistant will help with steps 16 and 17.

16. Install panel (6) and molding (14) on side panel frame (1) with fifty-eight screws (9).
17. Install panel (13) on side panel frame (1) with thirty-three screws (10).
18. Install molding (25) on panels (6) and (13) with thirteen screws (22).
19. Install plate (8) on panel (6) with eight screws (7).
20. Install junction box (24) on panel (6) with four screws (23).

NOTE

Perform step 21 for M820 and M820A2 vehicles.

21. Install four hangers (21) on panel (6) with eight screws (20).
22. Install four wood spacers (19) on panel (6) with eight screws (15).
23. Install four new rubber bumpers (18) on panel (6) and wood spacers (19) with four washers (16) and screws (17).
24. Install two clips (12) on panel (13) with four screws (11).
25. Install two new rubber bumpers (3) on side panel frame (1) with two screws (2).

15-35. INTERIOR SIDE PANELS AND LATCHES REPLACEMENT (Contd)

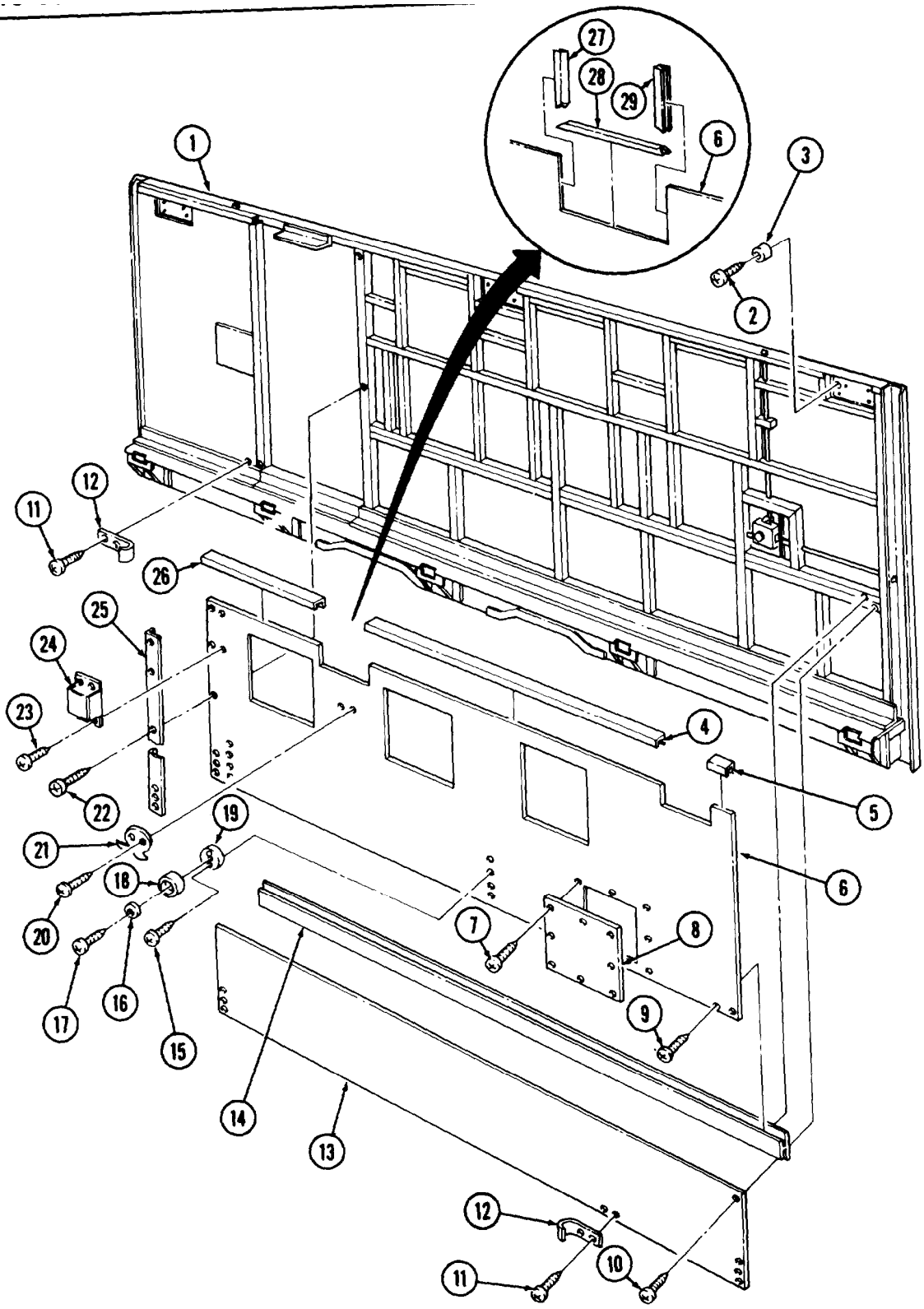

15-35. INTERIOR SIDE PANELS AND LATCHES REPLACEMENT (Contd)

26. Install two spacer plates (15) and striker (14) on side panel frame (4) with two screws (13).
27. Install door check (10) on door angle (6) with two new lockwashers (12), screws (11), and nuts (5).
28. Install striker (8) on side panel frame (4) with two screws (9).
29. Install three clips (3) on side panel frame (4) with six screws (7).
30. Install three hooks (2) on side panel frame (4) with six screws (1).

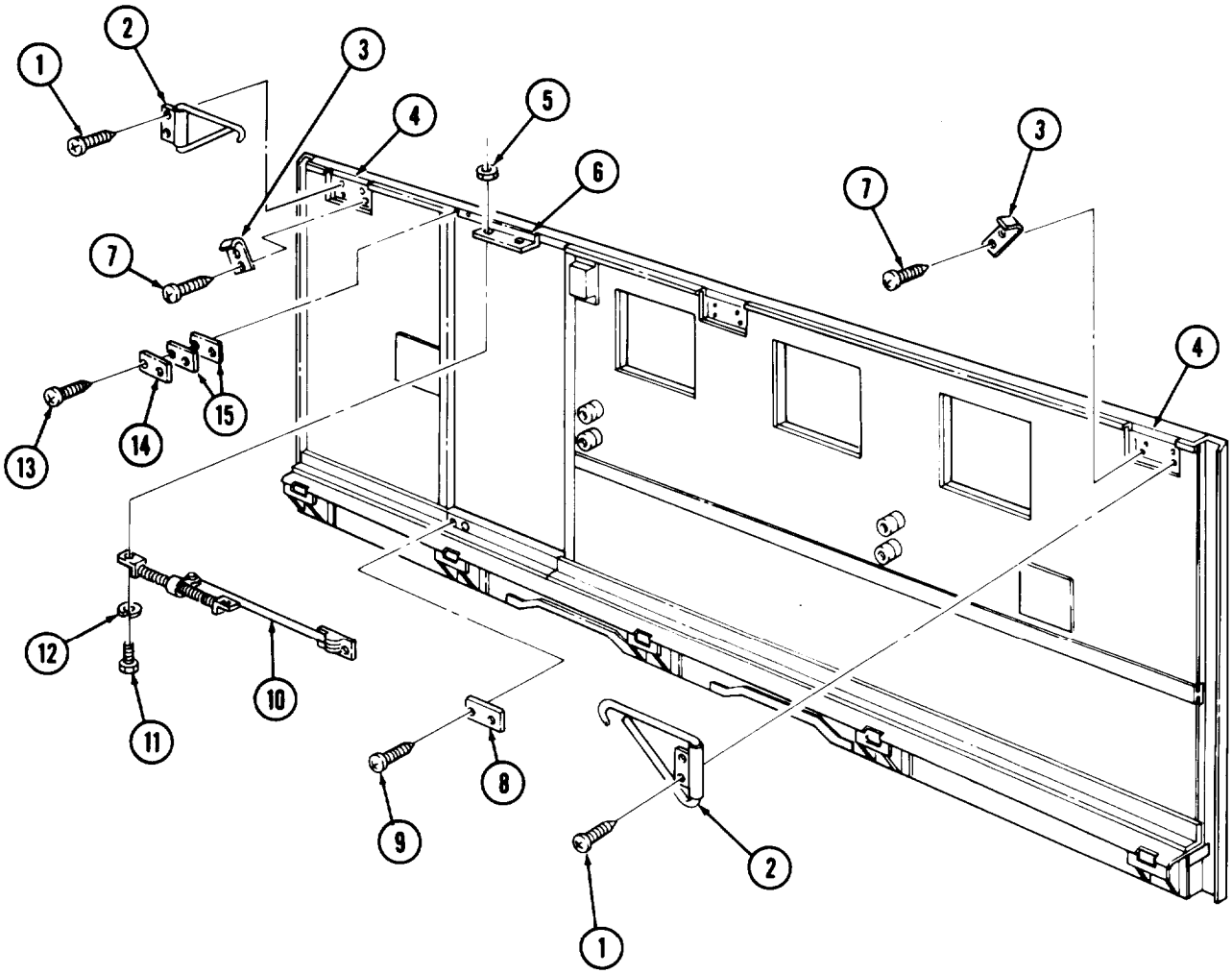

FOLLOW-ON TASKS:
- Install side doors (para. 15-29).
- Install hinged roof (para. 15-37).
- Install hinged floor (para, 15-31).
- IInstall hinged end panels (para. 15-33).
- Retract van body sides (TM 9-2320-260-10).

15-36. CEILING AND FRAME MAINTENANCE

THIS TASK COVERS:

a. Removal
b. Cleaning and Inspection
c. Installation

INITIAL SETUP

APPLICABLE MODELS
M820, M820A1, M820A2

TOOLS
General mechanic's tool kit (Appendix B, Item 1)
Rivet gun (Appendix B, Item 120)

MATERIALS/PARTS
One hundred two rivets (Appendix D, Item 352)
Ninety-three rivets (Appendix D, Item 357)
Six lockwashers (Appendix D, Item 219)
Seal (Appendix D, Item 454)
Eighty-two rivets (Appendix D, Item 346)
One hundred twenty-four rivets (Appendix D, Item 354)
One hundred forty-four rivets (Appendix D, Item 359)
Ninety-three rivets (Appendix D, Item 353)
Two seals (Appendix D, Item 453)

MATERIALS/PARTS (Contd)
Fibrous glass felt insulation (Appendix C, Item 16)
Adhesive (Appendix C, Item 2)
Primer (Appendix C, Item 31)

REFERENCES (TM)
TM 9-2320-260-10
TM 9-2320-260-34P-2

EQUIPMENT CONDITION
- Parking brake set (TM 9-2320-26 0-10).
- Van body sides fully expanded and secured (TM 9-2320-260-10).
- Ceiling air ducts removed (para. 15-45).
- Ceiling transition removed (para. 15-42 or 15-43).
- Rear doors removed (para. 15-28).

GENERAL SAFETY INSTRUCTIONS
Gloves, eyeshields, and dust mask must be worn during ceiling replacement.

WARNING

Van body is insulated with fibrous glass felt insulation. Gloves, eyeshields, and dust mask must be worn during ceiling replacement. Failure to do so may result in injury to personnel.

a. Removal

NOTE

Assistant will help with steps 1 through 4.

1. Remove ninety-three rivets (4), ceiling panel (3), and two liner strips (1) from ceiling frame (2). Discard rivets (4).
2. Remove one hundred two rivets (5), ceiling panel (6), and two liner strips (1) from ceiling frame (2). Discard rivets (5).

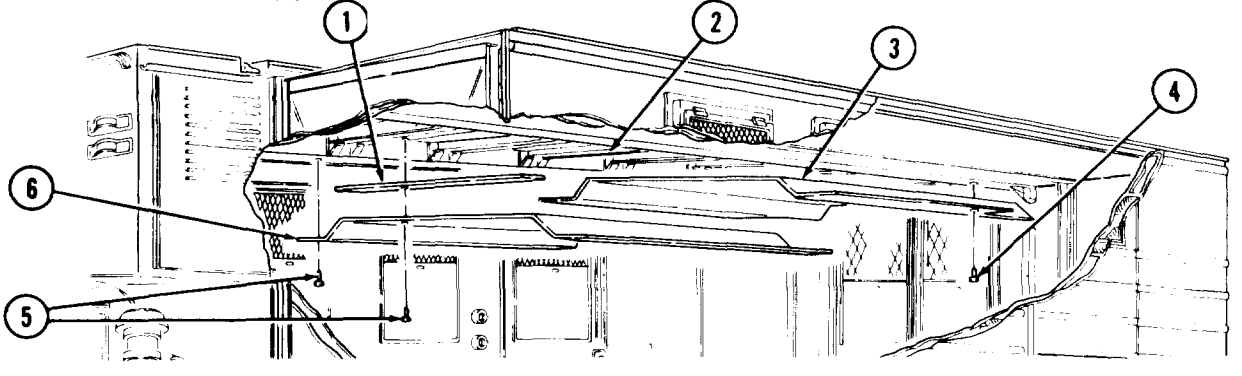

15-36. CEILING AND FRAME MAINTENANCE (Contd)

3. Remove ninety-three rivets (4), ceiling panel (3), and two liner strips (2) from ceiling frame (1). Discard rivets (4).
4. Remove eighty-two rivets (5), ceiling panel (6), and three liner strips (2) from ceiling frame (1). Discard rivets (5).

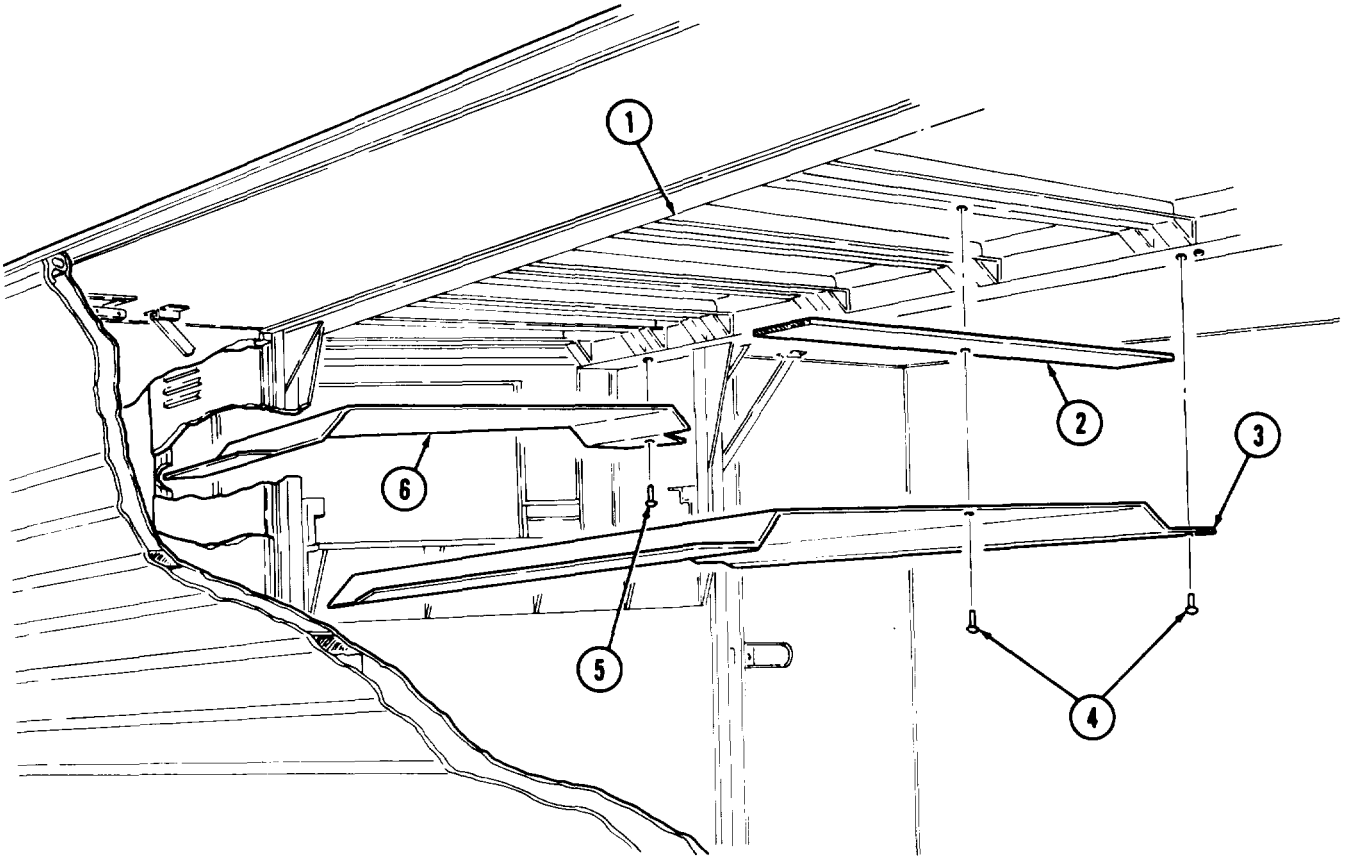

15-36. CEILING AND FRAME MAINTENANCE (Contd)

5. Remove one hundred twenty-eight screws (12), two moldings (11), moldings (13), and seals (10) from ceiling frame (1). Discard seals (10).
6. Remove six nuts (14), screws (8), lockwashers (7), and two lifting brackets (17). Discard lockwashers (7).

NOTE

- Perform step 7 if roof is to be removed (subtask b.).
- Assistant will help with step 7.

7. Remove one hundred twenty-four rivets (15), one hundred forty-four rivets (9), and ceiling panel (16) from ceiling frame (1). Place ceiling panel (16) on wooden blocks. Discard rivets (15) and (9).

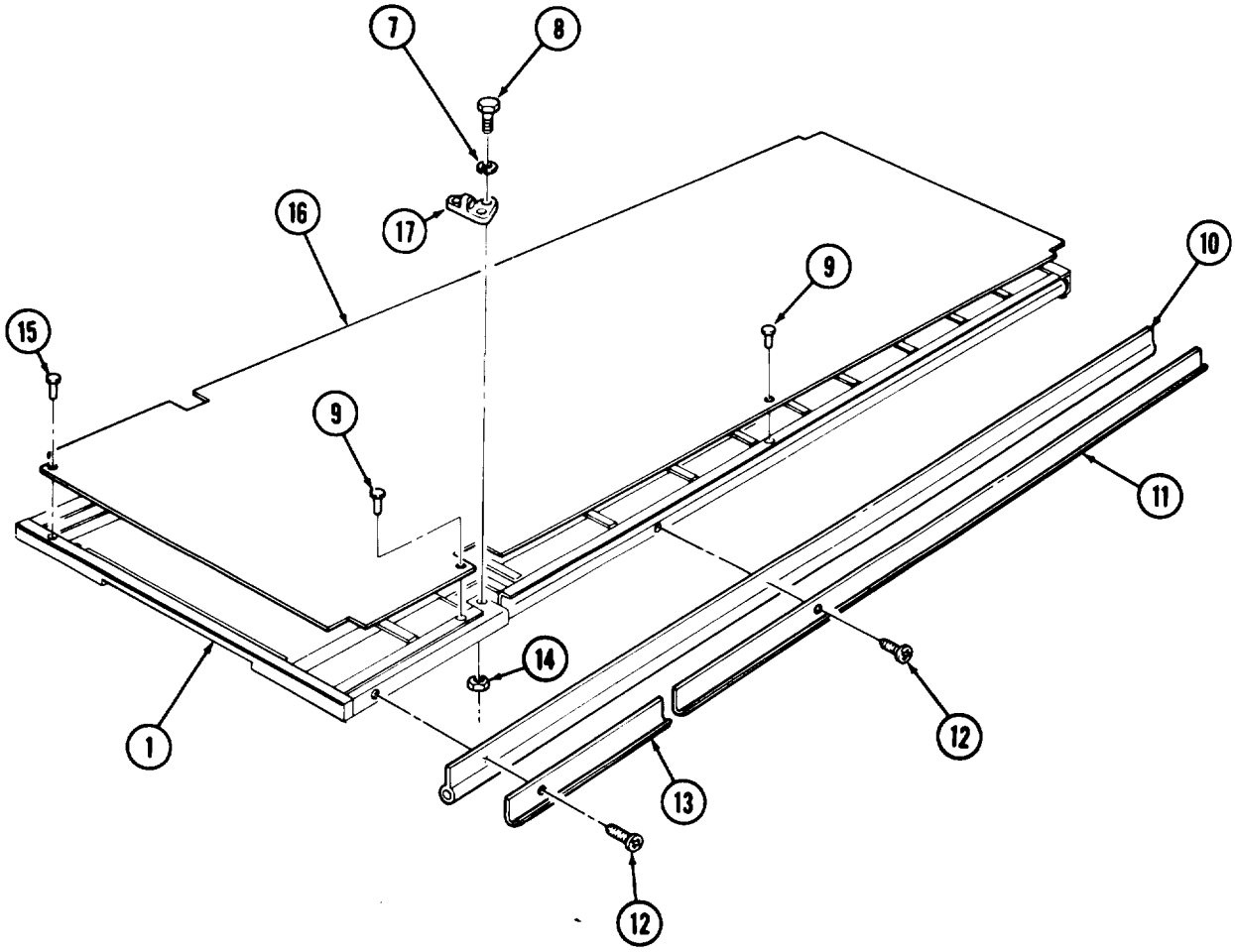

15-36. CEILING AND FRAME MAINTENANCE (Contd)

8. Remove twenty-three screws (2) and moldings (1), (3), and (4) from van body (11).
9. Remove three screws (6) and angle bracket (7) from retainer (8).
10. Remove fifteen screws (5), retainer (8), seal (9), and wood block (10) from van body (11). Discard seal (9).

b. Cleaning and Inspection

1. For general cleaning instructions, refer to para. 2-8
2. For general inspection instructions, refer to para. 2-9.
3. Inspect moldings (1), (3), and (4), angle bracket (7), retainer (8), wood block (10), mouldings (14) and (15), and lifting bracket (13), for cracks, bends, and breaks. Replace part(s) if cracked) bent, or broken.
4. Inspect ceiling frame (16) for breaks, warpage, and broken bows. Replace roof if frame (16) is broken, warped, or has broken bows.
5. Inspect ceiling panels (12), (17), (18), (19), and (20) for cracks, tears, and punctures. Replace part(s) if cracked, torn, or punctured.

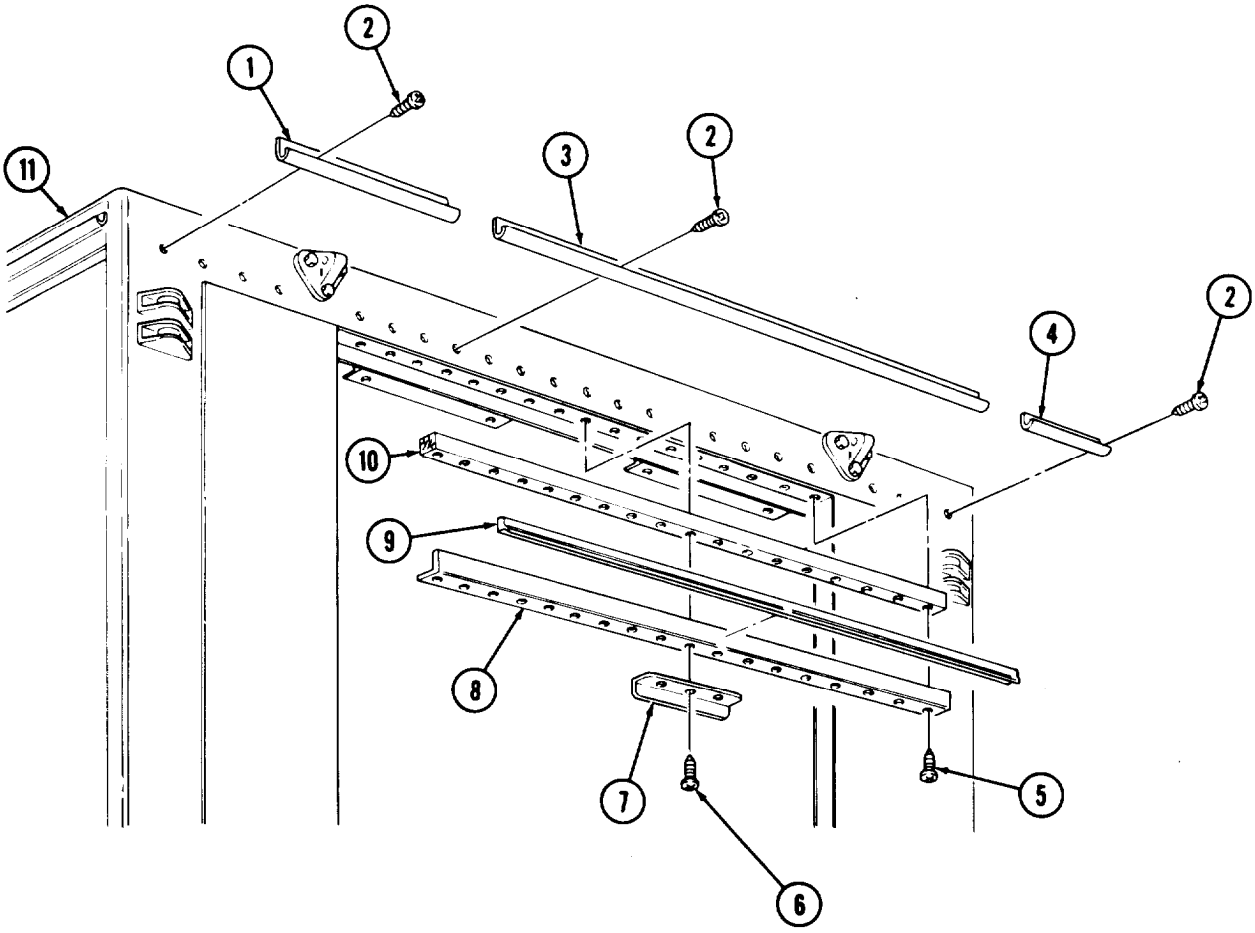

15-36. CEILING AND FRAME MAINTENANCE (Contd)

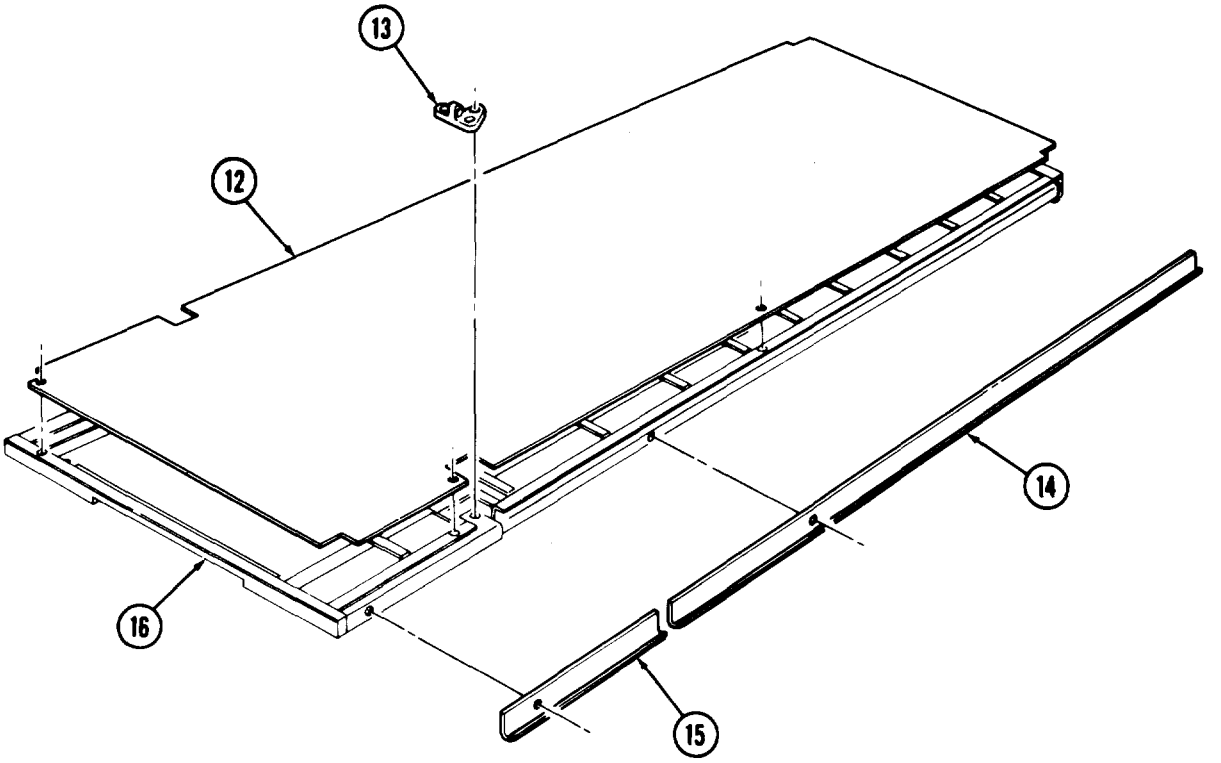

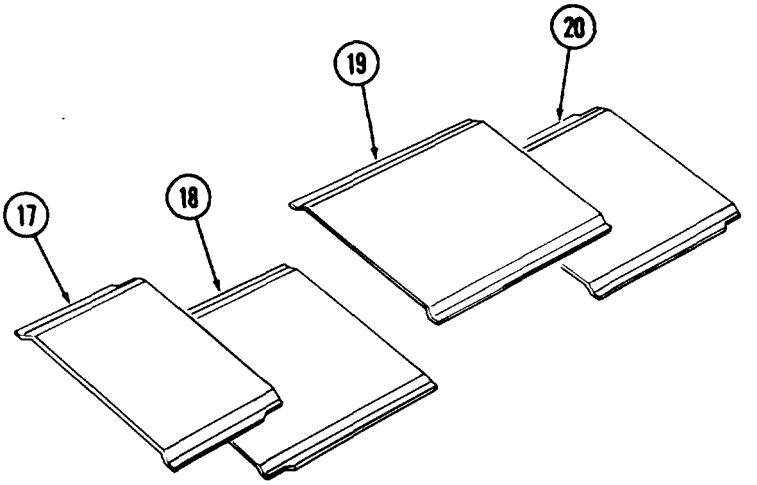

15-36. CEILING AND FRAME MAINTENANCE (Contd)

NOTE

- Apply adhesive for installation.
- Insulate areas of dissimilar metal-to-metal contact with zinc chromate primer.

c. Installation

NOTE

When installing molding, wood block, and seal on van body, leave three center holes of retainer open for installation of angle bracket.

1. Install wood block (10), new seal (9), and retainer (8) on van body (11) with fifteen screws (5).
2. Install angle bracket (7) on retainer (8) and van body (11) with three screws (6).
3. Install moldings (1), (3), and (4) on van body (11) with twenty-three screws (2).

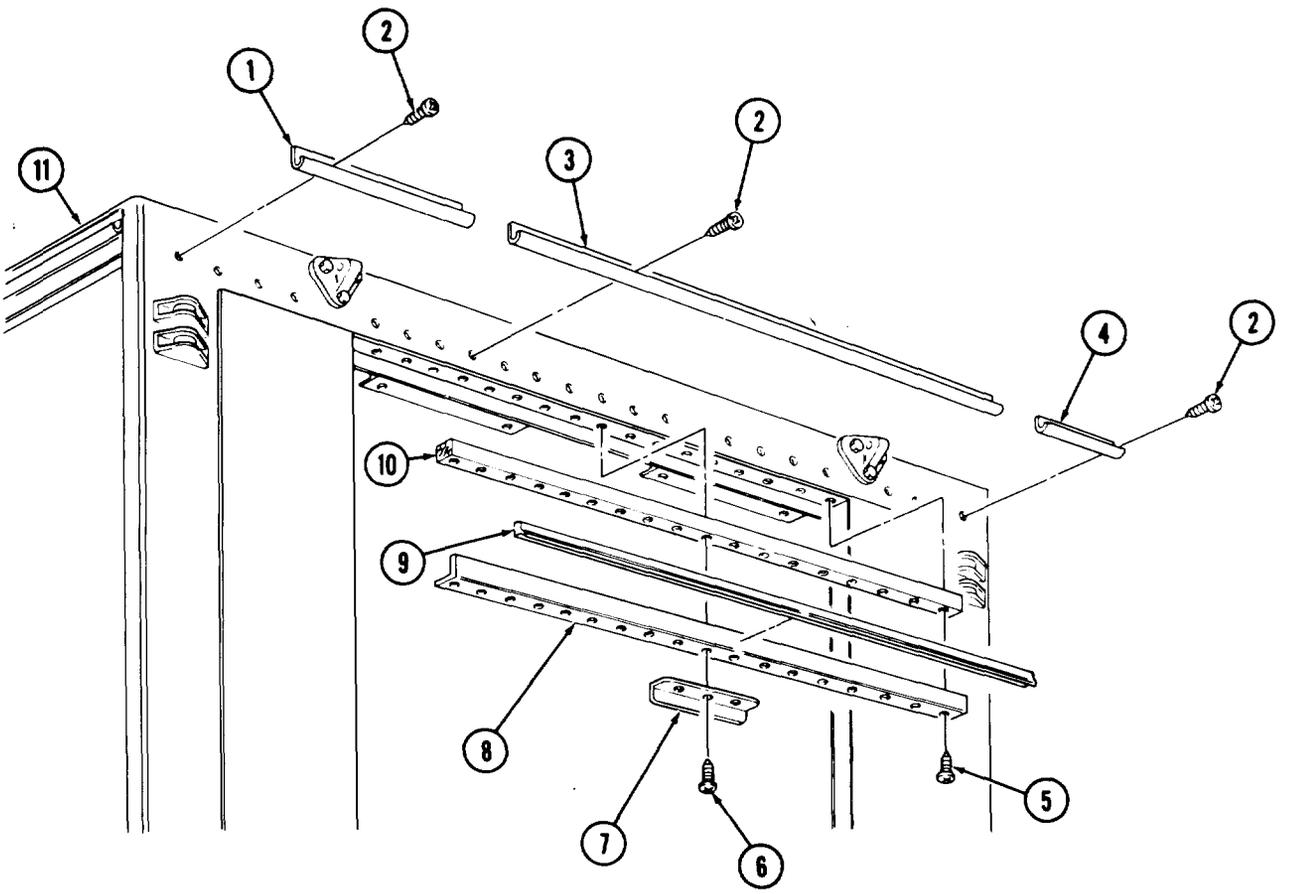

15-36. CEILING AND FRAME MAINTENANCE (Contd)

NOTE

- Perform step 4 if roof panel is to be installed (subtask b.).
- Insulate entire structure with fibrous glass felt insulation.
- Assistant will help with steps 4 and 5.

4. Lift ceiling panel (21) from wooden supports and position on ceiling frame (19).
5. Install ceiling panel (21) on ceiling frame (19) with one hundred forty-four new rivets (13) and one hundred twenty-four new rivets (20).
6. Install two lifting brackets (22) on ceiling frame (21) with six new lockwashers (23), screws (12), and nuts (18).
7. Install two new seals (14), moldings (15), and moldings (17) on ceiling frame (19) with one hundred twenty-eight screws (16).

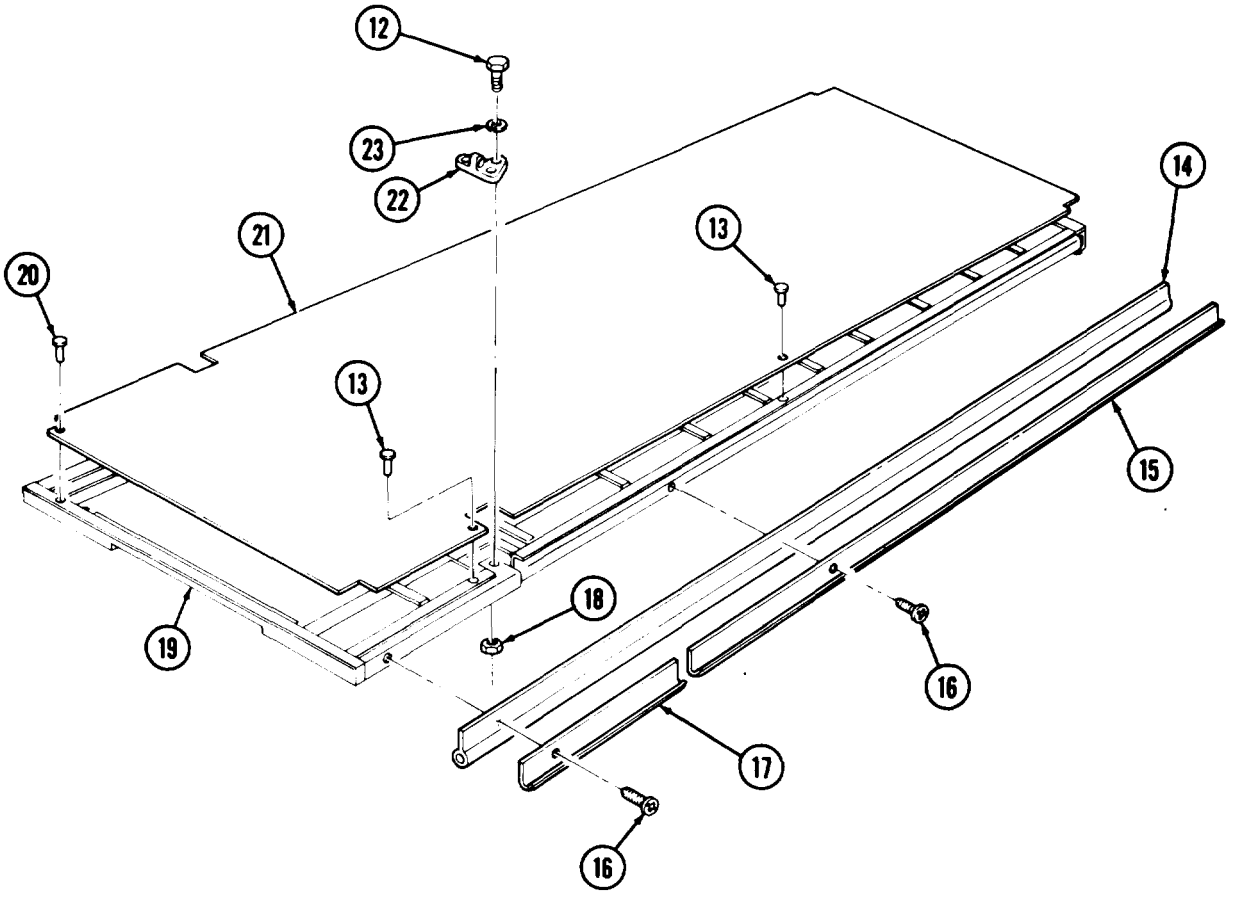

15-36. CEILING AND FRAME MAINTENANCE (Contd)

NOTE

Assistant will help with steps 8 through 11.

8. Install ceiling panel (6) and three liner strips (2) on ceiling frame (1) with eighty-two new rivets (5).
9. Install ceiling panel (3) and two liner strips (2) on ceiling frame (1) with ninety-three new rivets (4).
10. Install ceiling panel (7) and two liner strips (2) on ceiling frame (1) with one hundred two new rivets (9).
11. Install ceiling panel (10) and two liner strips (2) on ceiling frame (1) with ninety-three new rivets (8).

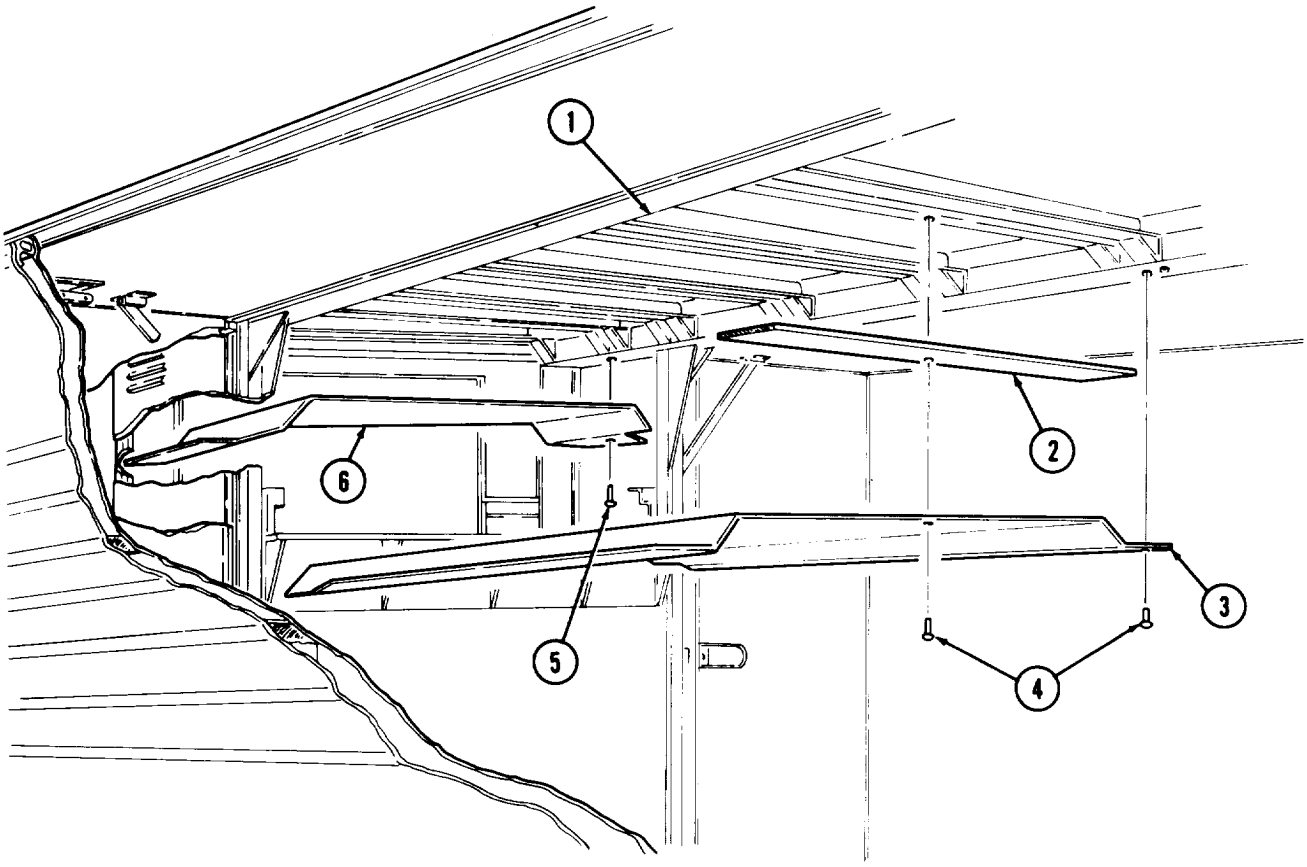

15-36. CEILING AND FRAME MAINTENANCE (Contd)

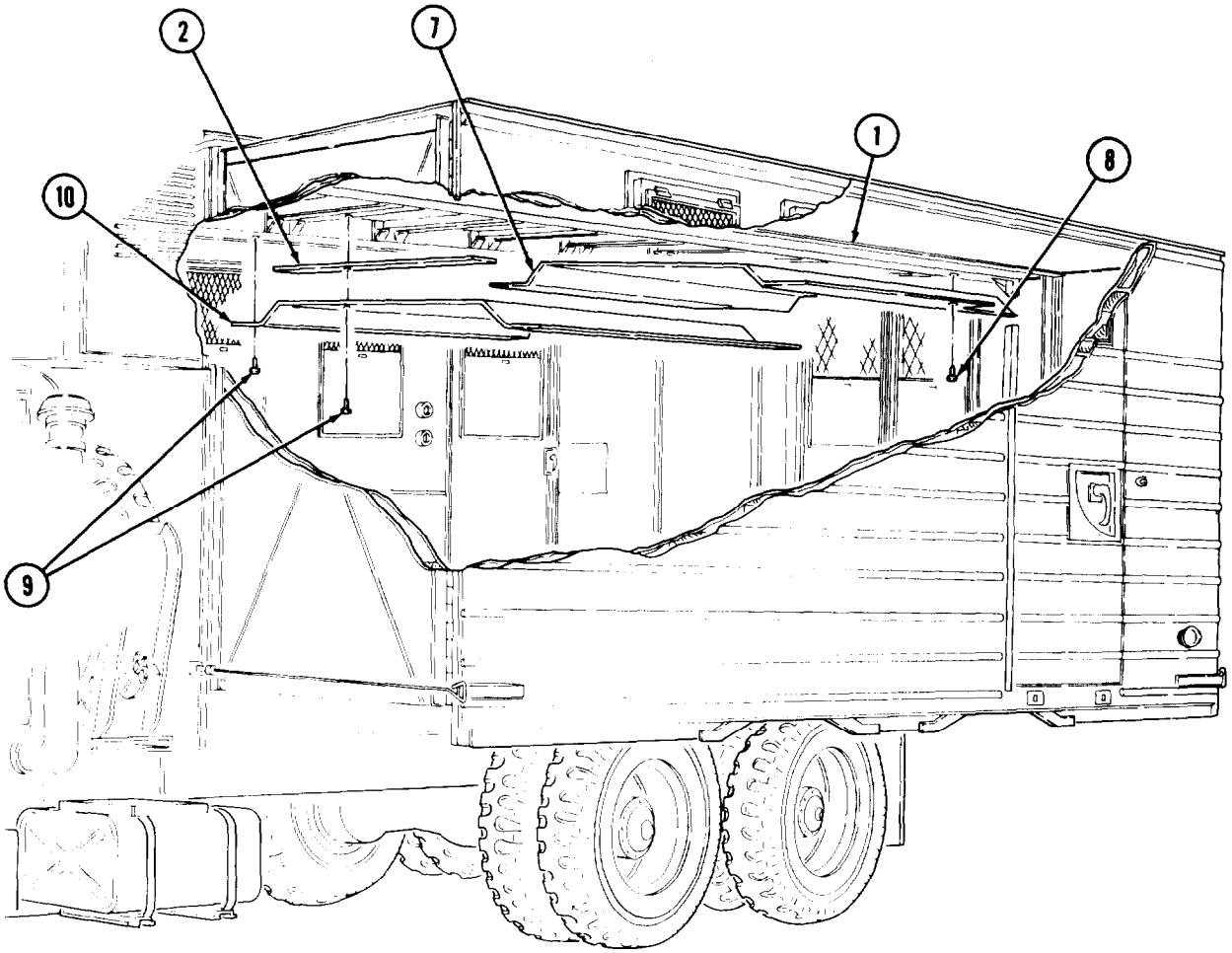

FOLLOW-ON TASKS: • Install rear doors (para. 15-28).
• Install ceiling transition (para. 15-42 or 15-43).
• Install ceiling air ducts (para. 15-45).
•Retract van body sides (TM 9-2320-260-10).

15-37. HINGED ROOF MAINTENANCE

THIS TASK COVERS:

a. Removal
b. Disassembly
c. Cleaning and Inspection
d. Assembly
e. Installation

INITIAL SETUP

APPLICABLE MODELS
M820, M820A1, M820A2

TOOLS
General mechanic's tool kit (Appendix B, Item 1)
Rivet gun (Appendix B, Item 120)
Lifting device
Chains

MATERIALS/PARTS
Locknut (Appendix D, Item 196)
One hundred fifty-seven rivets (Appendix D, Item 360)
Fifty-two rivets (Appendix D, Item 361)
Twenty-four rivets (Appendix D, Item 362)
Seal (Appendix D, Item 445)
Seal (Appendix D, Item 455)
Seal (Appendix D, Item 450)
Seal (Appendix D, Item 456)
Seal (Appendix D, Item 457)
Cushion pad (Appendix D, Item 52)
Cushion pad (Appendix D, Item 53)
Four rubber bumpers (Appendix D, Item 369)
Two cotter pins (Appendix D, Item 21)
Cotter pin (Appendix D, Item 37)
Gasket (Appendix D, Item 104)
O-ring (Appendix D, Item 299)
Fibrous glass felt insulation (Appendix C, Item 16)

MATERIALS/PARTS (Contd)
Primer (Appendix C, Item 31)
Sealing compound (Appendix C, Item 45)
Adhesive (Appendix C, Item 2)

REFERENCES (TM)
TM 9-2320-260-10
TM 9-2320-260-20
TM 9-2320-260-34P-2

EQUIPMENT CONDITION
- Van body sides fully expanded and secured (TM 9-2320-260-10).
- Hinged roof-operated blackout plungers removed (TM 9-2320-260-20).
- Ceiling rear cover removed (para. 15-40 or 15-41).
- Ceiling filler and side panels removed (M820, M820A2) (para. 15-44).
- Left and right side blackout wiring harness removed (M820, M820A2) (para. 15-72).
- Ceiling removed (M820A1) (para. 15-36).

GENERAL SAFETY INSTRUCTIONS
- All personnel must stand clear during lifting operations.
- Ensure lifting capacity is greater than weight of hinged roof.
- Gloves, eyeshields, and dust mask must be worn during hinged roof replacement.

WARNING

Van body is insulated with fibrous glass felt insulation, Gloves, eyeshields, and dust mask must be worn during hinged roof maintenance. Failure to do so may result in injury to personnel.

NOTE

Left and right side hinged roofs are maintained the same. This procedure covers the right side hinged roof.

a. Removal

1. Attach two chains to lifting device and hinged roof (2) and remove slack from chains.
2. Remove four screws (4), two angle brackets (3), and holding rods (5) from hinged roof (2).

15-37. HINGED ROOF MAINTENANCE (Contd)

WARNING

- All personnel must stand clear during lifting operations. A swinging or shifting load may cause injury to personnel.
- Ensure lifting capacity is greater than weight of hinged roof. Failure to do so may result in injury to personnel or damage to equipment.

NOTE

Assistant will help with step 3.

3. Remove sixty-nine screws (6) and hinged roof (2) from van body (1). Place hinged roof (2) on wooden supports.
4. Remove chains from lifting device and hinged roof (2).

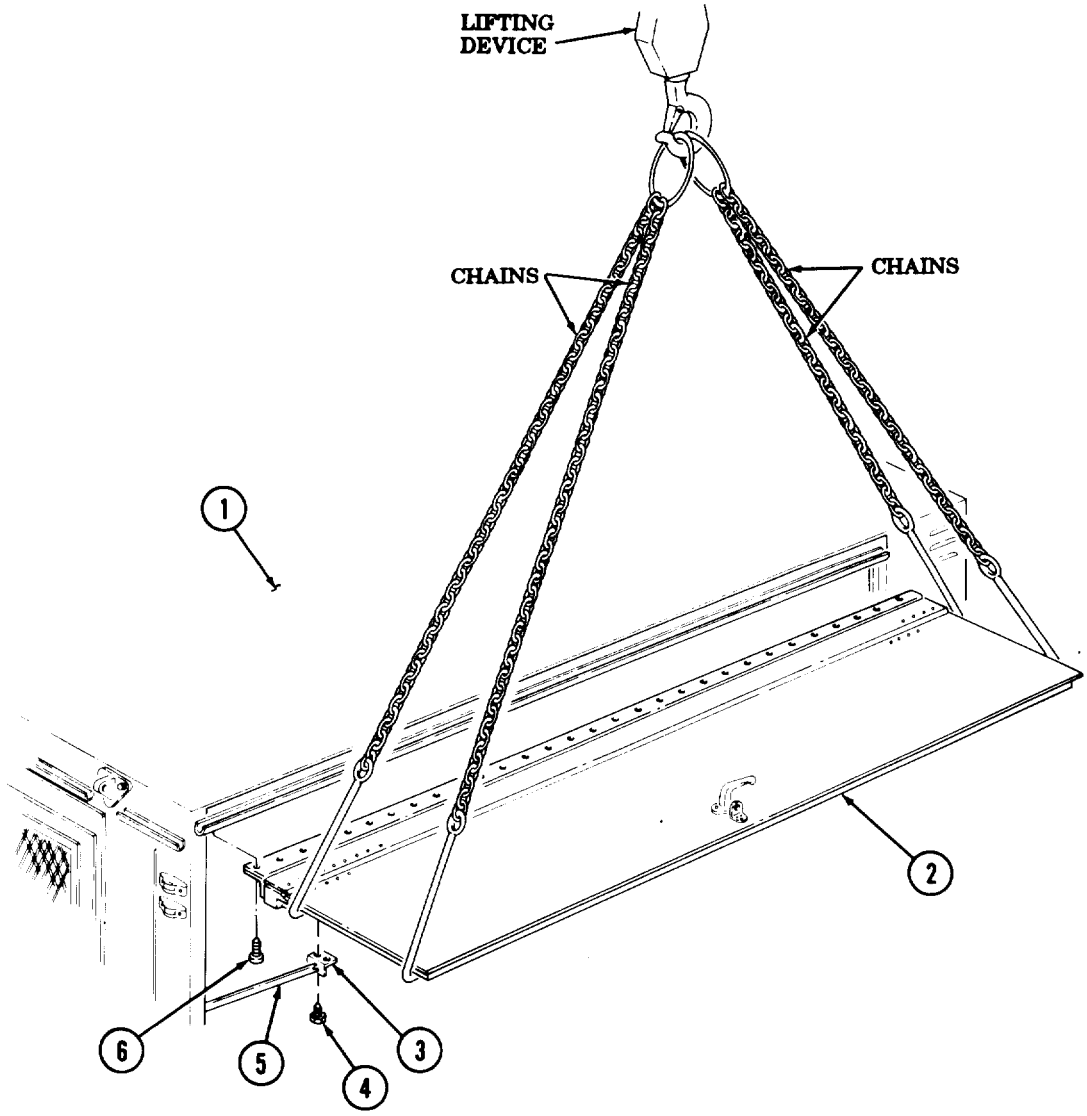

15-37. HINGED ROOF MAINTENANCE (Contd)

b. Disassembly

WARNING

Van body is insulated with fibrous glass felt insulation. Gloves, eyeshields, and dust mask must be worn during ceiling replacement. Failure to do so may result in injury to personnel.

1. Remove twelve screws (27) and three clamps (28) from hinged roof frame (1).
2. Remove six screws (25) and three holder assemblies (26) from hinged roof frame (1).
3. Remove thirty screws (5), three moldings (4), moldings (6), and moldings (7) from panels (2) and (18).
4. Remove four screws (11) and handle (12) from panel (2).
5. Remove ten screws (13) and cover (14) from panel (2).
6. Remove six screws (9) and plate (8) from panel (2).
7, Remove six screws (19) and three bars (20) from panels (2) and (18).
8. Remove six screws (21) and three fillers (22) from panels (2) and (18).
9. Remove two screws (15) and molding (16) from panels (2) and (18).
10. Remove moldings (3), (23), and (24) from panels (2) and (18).

NOTE

Assistant will help with steps 11 and 12.

11. Remove fifty-five screws (10) and panel (2) from hinged roof frame (1).
12. Remove forty-one screws (17) and panel (18) from hinged roof frame (1).

15-37. HINGED ROOF MAINTENANCE (Contd)

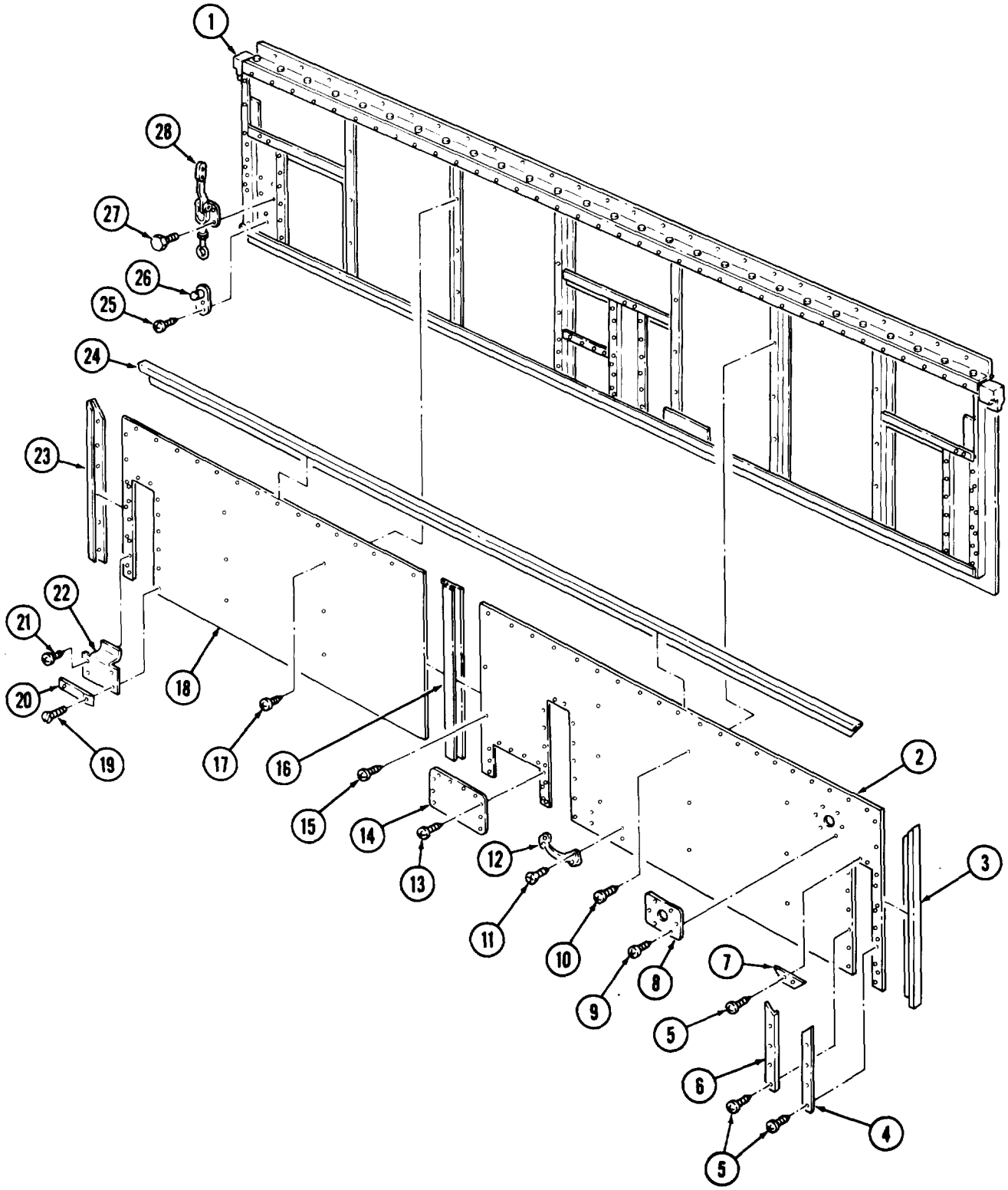

15-37. HINGED ROOF MAINTENANCE (Contd)

13. Remove sixty-nine screws (26), hinge (14), and seal (13) from hinged roof frame (11). Discard seal (13).
14. Remove twenty-four rivets (29), retainer (30), and seal (28) from hinged roof frame (11). Discard rivets (29) and seal (28).
15.
16. Remove fifty-two rivets (34), retainer (33), and seal (35) from hinged roof frame (11). Discard rivets (34) and seal (35).
17. Remove seals (31) and (32) from hinged roof frame (11). Discard seals (31) and (32).
18. Remove padlock and chain (2) and chain hook (1) from angle bracket (37).
19, Remove screw (38) and angle bracket (37) from skin (7).
20. Remove cotter pin (24), locknut (23), and washer (22) from handle (3). Discard cotter pin (24) and locknut (23).
21. Remove two screws (4), plate (5), handle (3), gasket (6), and O-ring (36) from skin (7). Discard gasket (6) and O-ring (36).
22. Remove two cotter pins (19) and pins (16) from latch (17). Discard cotter pins (19).
23. Remove four nuts (21), washers (20), and latch (17) from hinged roof frame (11).
24. Remove two clevises (18) from bars (15) and (25).
25. Remove bars (15) and (25) from hinged roof frame (11).
26. Remove four screws (9) and rubber bumpers (10) from hinged roof frame (11). Discard rubber bumpers (10).

NOTE

- Perform step 27 if skin is to be replaced (subtask c.).
- Assistant will help with step 27.

27. Remove one hundred fifty-seven rivets (8) and skin (7) from hinged roof frame (11). Discard rivets (8).

15-37 HINGED ROOF MAINTENANCE (Contd)

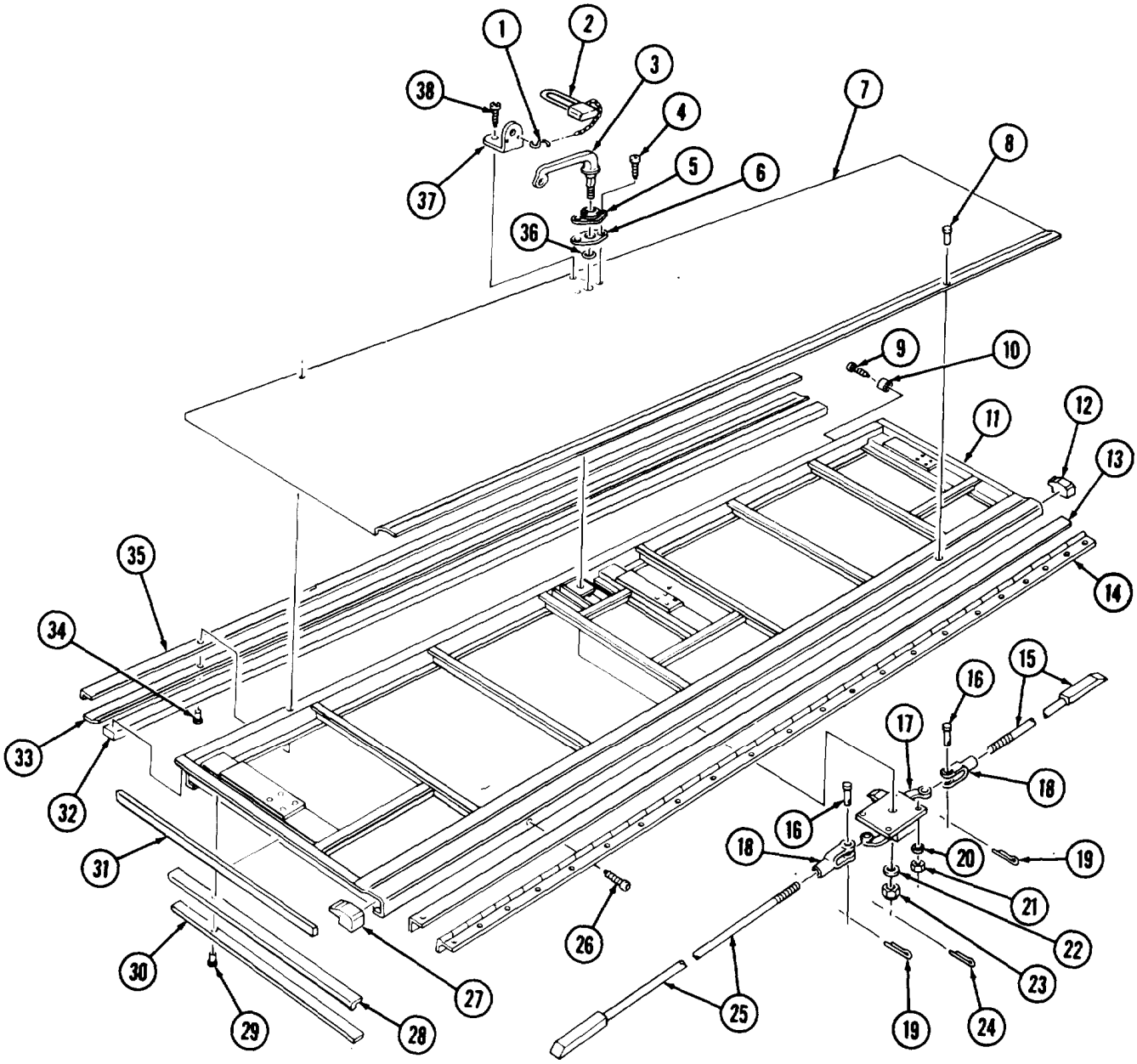

15-37. HINGED ROOF MAINTENANCE (Contd)

c. Cleaning and Inspection

1. For general cleaning instructions, refer to para. 2-8.
2. For general inspection instructions, refer to para. 2-9.
3. Inspect panels (2) and (11) and retainers (28) and (29) for cracks and breaks. Replace part(s) if cracked or broken.
4. Inspect moldings (3), (4), (5), (6), (10), (14), and (15) for warpage and breaks. Replace part(s) if warped or broken.
5. Inspect plate (7), handle (8), cover (9), three bars (12), fillers (13), bars (24) and (27), and two clevises (25) for bends and breaks. Replace part(s) if bent or broken.
6. Inspect three clamps (17), holders (16), and hinge (23) for breaks and proper operation. Replace clamp(s) (17), holder(s) (16), or hinge (23) if broken or operating improperly.
7. Inspect angle bracket (18), padlock and chain (19), chain hook (20), and handle (21) for breaks. Replace part(s) is broken.
8. Inspect latch (26) for proper operation. Replace latch (26) if operating improperly.
9. Inspect skin (22) for tears and punctures. Replace skin (22) if torn or punctured.
10. Inspect frame (1) for breaks. Replace hinged roof if frame (1) is broken.

15-37. HINGED ROOF MAINTENANCE (Contd)

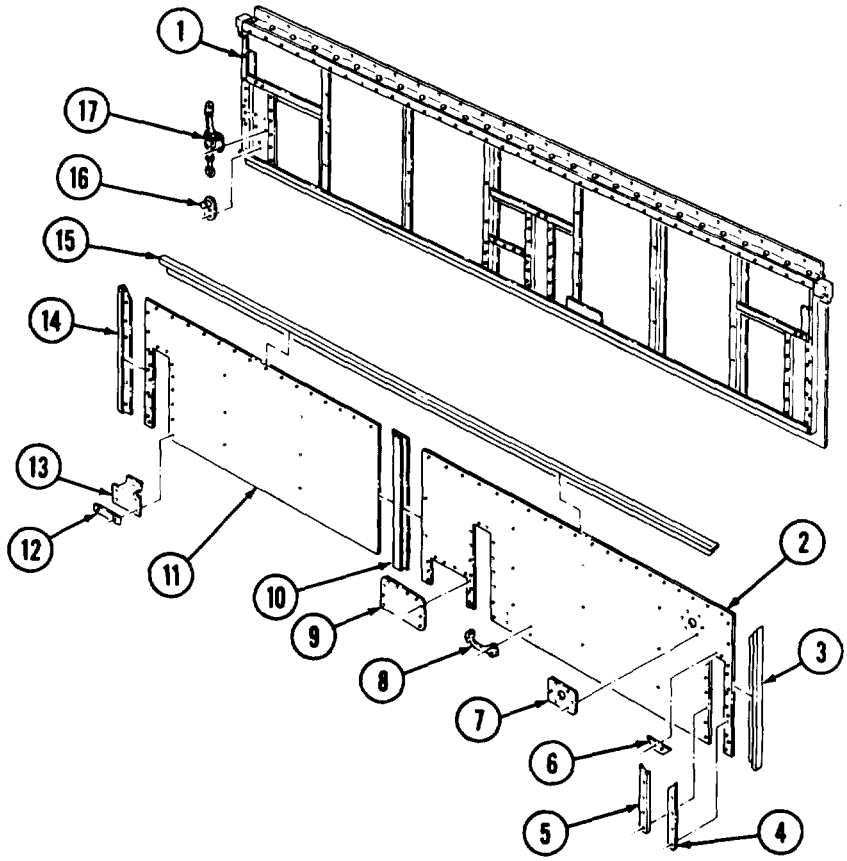

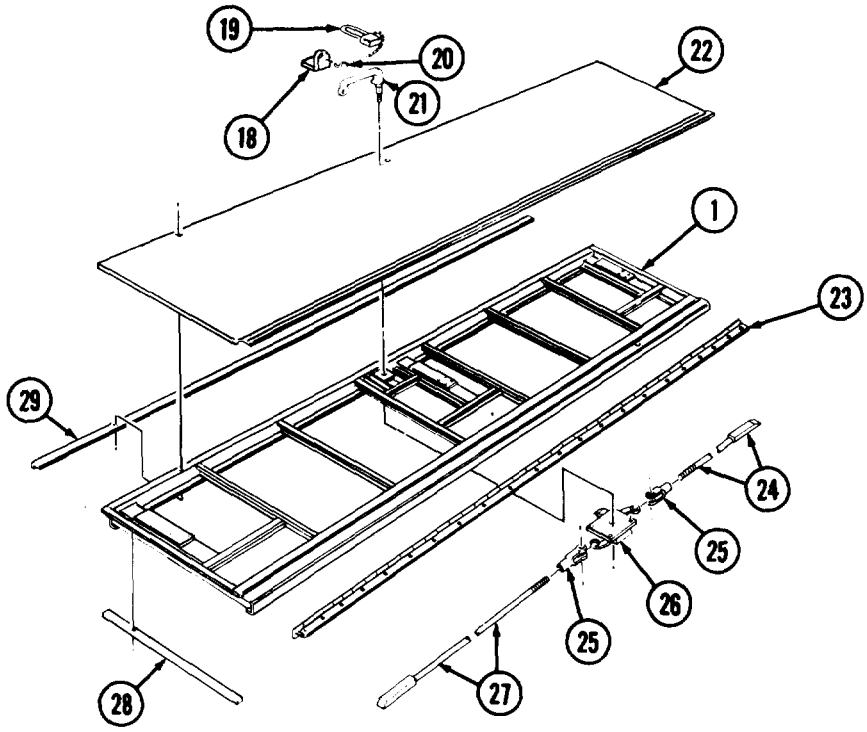

15-37. HINGED ROOF MAINTENANCE (Contd)

d. Assembly

NOW

- Insulate areas of dissimilar metal-to-metal contact with zinc chromate primer.
- Seal between exterior joints with sealing compound.
- Apply adhesive to both rubber and metal surfaces.
- Perform step 1 only if skin was replaced (subtask c.).
- Assistant will help with step 1.

1. Install skin (7) on hinged roof frame (11) with one hundred fifty-seven new rivets (8).
2. Install four new rubber bumpers (10) on hinged roof frame (11) with four screws (9).
3. Install two clevises (18) on bars (15) and (25) and position in slots of hinged roof frame (11).
4. Install latch (17) on hinged roof frame (11) with four washers (20) and nuts (21).
5. Install two clevises (18) on latch (17) with two pins (16) and new cotter pins (19).
6. Install new O-ring (36), new gasket (6), plate (5), and handle (3) on skin (7) with two screws (4).
7. Install handle (3) on latch (17) with washer (22), new locknut (23), and new cotter pin (24).
8. Install angle bracket (37) on skin (7) with three screws (38).
9. Install chain hook (1) and padlock and chain (2) on angle bracket (37).
10. Install new seals (31) and (32) on hinged roof frame (11).
11. Install new seal (35) and retainer (33) on hinged roof frame (11) with fifty-two new rivets (34).
12. Install new cushion pads (12) and (27) on hinged roof frame (11).
13. Install new seal (28) and retainer (30) on hinged roof frame (11) with twenty-four new rivets (29).
14. Install new seal (13) and hinge (14) on hinged roof frame (11) with sixty-nine screws (26).

15-37. HINGED ROOF MAINTENANCE (Contd)

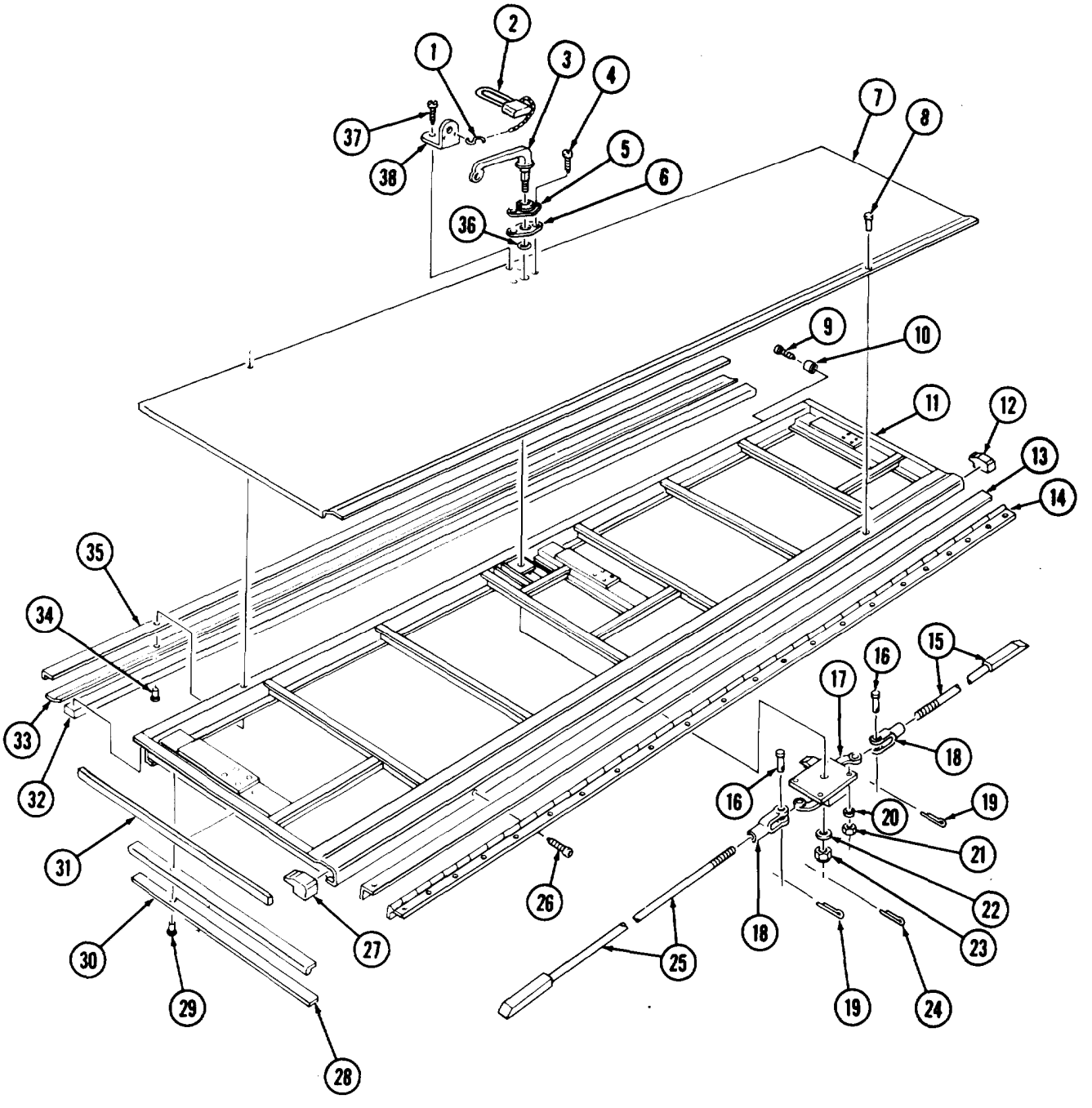

15-37. HINGED ROOF MAINTENANCE (Contd)

NOTE

- Insulate entire structure with fibrous glass felt insulation.
- Assistant will help with steps 15 and 16.

15. Install panel (18) on hinged roof frame (1) with forty-one screws (17).
16. Install panel (2) on hinged roof frame (1) with fifty-five screws (10).
17. Install molding (16) on panels (2) and (18) with two screws (15).
18. Install moldings (3), (23), and (24) on panels (2) and (18).
19. Install three fillers (22) on panels (2) and (18) with six screws (21).
20. Install three bars (20) on fillers (22) with six screws (19).
21. Install plate (8) on panel (2) with six screws (9).
22. Install cover (14) on panel (2) with ten screws (13).
23. Install handle (12) on panel (2) with four screws (11).
24. Install three moldings (4), moldings (6), and moldings (7) on panels (2) and (18) with thirty screws (5).
25. Install three holders (26) on hinged roof frame (1) with six screws (25).
26. Install three clamps (28) on hinged roof frame (1) with twelve screws (27).

15-37. HINGED ROOF MAINTENANCE (Contd)

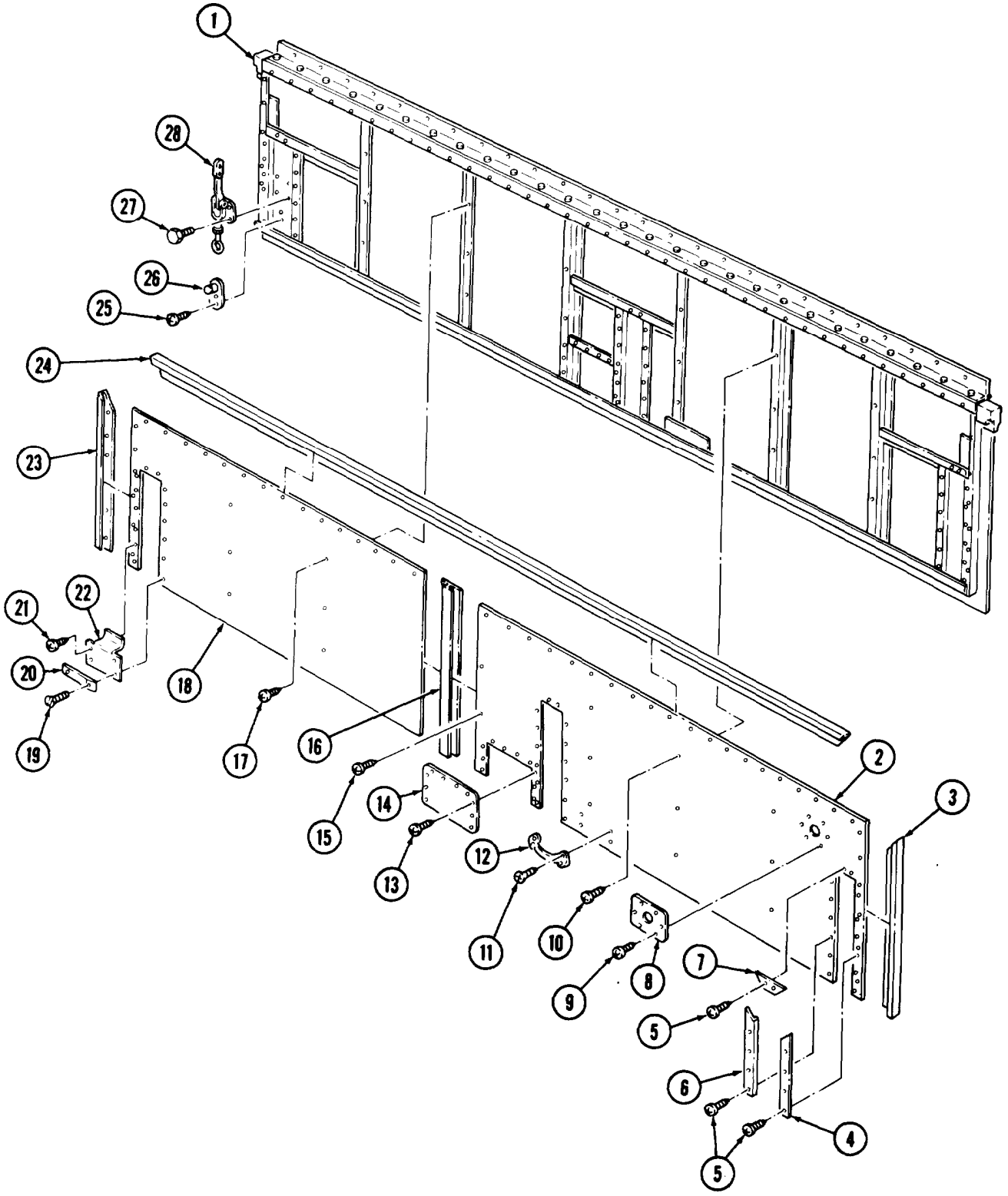

15-37. HINGED ROOF MAINTENANCE (Contd)

e. Installation

1. Attach two chains to lifting device and hinged roof (2).

WARNING

- All personnel must stand clear during lifting operations. A swinging or shifting load may result in injury to personnel.
- Ensure lifting capacity is greater than weight (500 lb (227 kg)) of hinged roof. Failure to do so may result in injury to personnel.

NOTE

Assistant will help with step 2.

2. Lift hinged roof (2) from wooden supports and install on van body (1) with sixty-nine screws (6).
3. Install hinged roof (2) on two holding rods (5) and angle brackets (3) with four screws (4).
4. Remove chains from lifting device and hinged roof (2).

NOTE

Hinged roof-operated blackout plungers must be installed before side blackout harnesses are installed in load center,

5. Install hinged roof-operated blackout plungers (TM 9-2320-260-20).

15-37. HINGED ROOF MAINTENANCE (Contd)

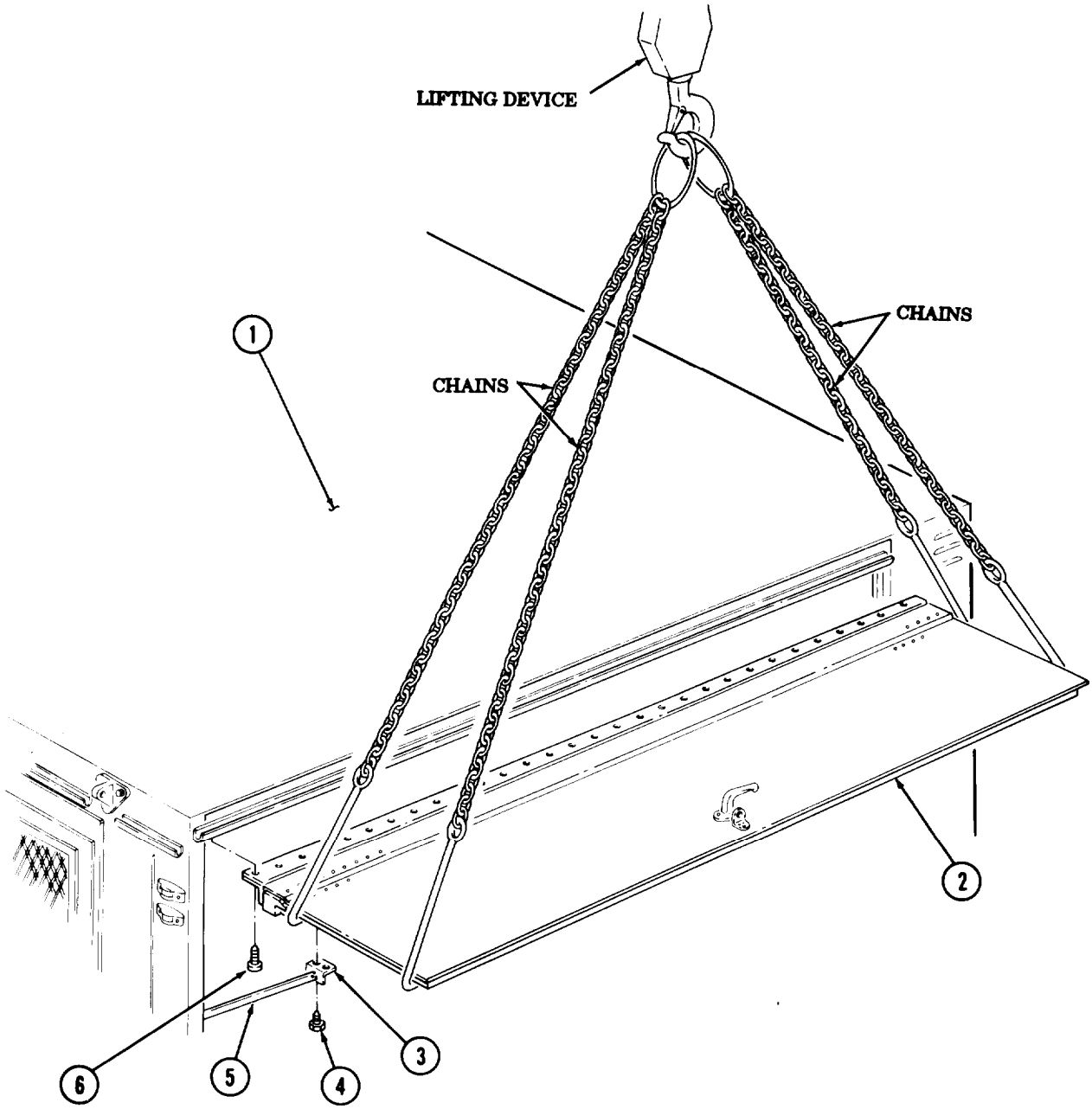

FOLLOW-ON TASKS:
- Install ceiling (M820A1) (para. 15-36).
- Install left and right side blackout wiring harness (M820, M820A2) (para. 15-72).
- Install ceiling filler and side panels (M820, M820A2) (para. 15-44).
- Install ceiling rear cover (para. 15-40 or 15-41).
- Install hinged roof-operated blackout plungers (TM 9-2320-260-20).
- Retract van body sides (TM 9-2320-260-10).

I5-38. CEILING REGISTERS AND DEFLECTORS REPLACEMENT

THIS TASK COVERS:

a. Removal b. Installation

INITIAL SETUP

APPUCABLE MODELS
M820, M820A1, M820A2

TOOIS
General mechanic's tool kit (Appendix B, Item 1)

REFERENCES (TM]
TM 9-2320-260-10
TM 9-2320-260-34P-2

EQUIPMENT CONDITION
Parking brake set (TM 9-2320-260-10).

GENERAL SAFETY INSTRUCTIONS
Gloves, eyeshields, and dust mask must be worn during register and deflector replacement.

WARNING

Van body is insulated with fibrous glass felt insulation. Gloves, eyeshields, and dust mask must be worn during register and deflector replacement. Failure to do so may result in injury to personnel.

NOTE

- All ceiling registers and cleflectors are replaced the same. This procedure covers the replacement of one register and deflector,
- Registers and deflectors in M820, M820A1, and M820A2 vehicles are replaced the same. This procedure covers the M820 and M820A2 vehicles.

a. Removal

1. Remove two screws (5) and register (6) from ceiling side panel (4) and deflector (2).
2. Remove twelve screws (1) and deflector (2) from air duct (3) and ceiling side panel (4).
3. Remove two screws (8) and register (7) from air duct (3).

b. Installation

1. Install register (7) on air duct (3) with two screws (8).
2. Install deflector (2) on air duct (3) and ceiling side panel (4) with twelve screws (1).
3. Install register (6) on ceiling side panel (4) and deflector (2) with two screws (5).

15-38. CEILING REGISTERS AND DEFLECTORS REPLACEMENT (Contd)

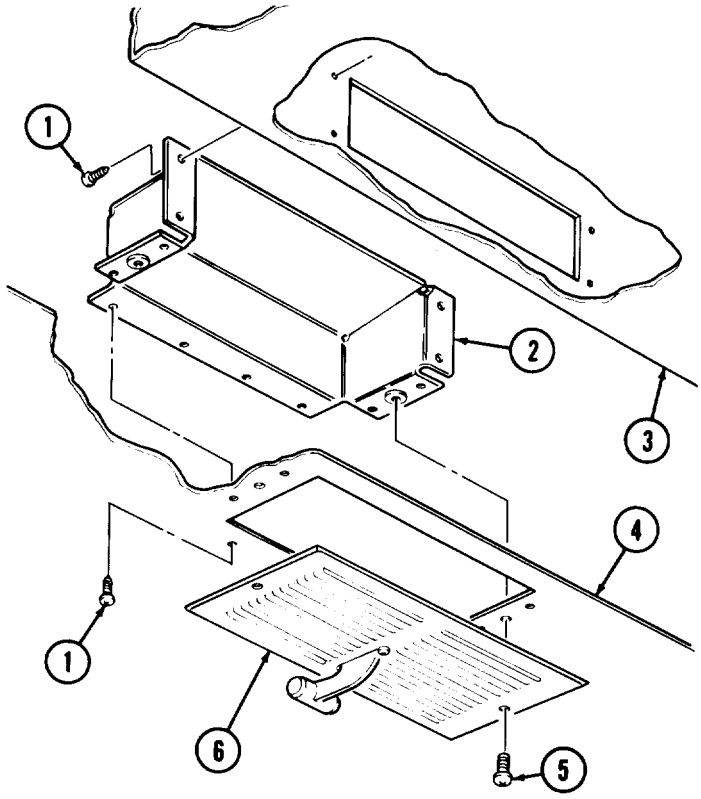

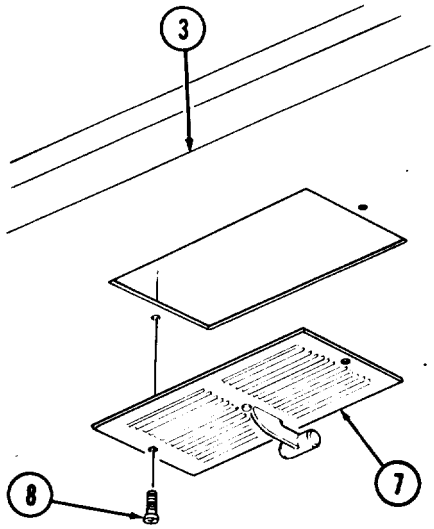

15-39. FRONT WALL REGISTER REPLACEMENT

THIS TASK COVERS:

a. Removal **b. Installation**

INITIAL SETUP

APPLICABLE MODELS
M820, M820A1, M820A2

TOOLS
General mechanic's tool kit (Appendix B, Item 1)

REFERENCES (TM)
TM 9-2320-260-10
TM 9-2320 -260-34P-2

EQUIPMENT CONDITION
Parking brake set (TM 9-2320-260-10).

NOTE

All four front wall registers are replaced the same. This procedure covers one register.

a. Removal

Remove four screws (3) and register (2) from front wall (1).

b. Installation

Install register (2) on front wall (1) with four screws (3).

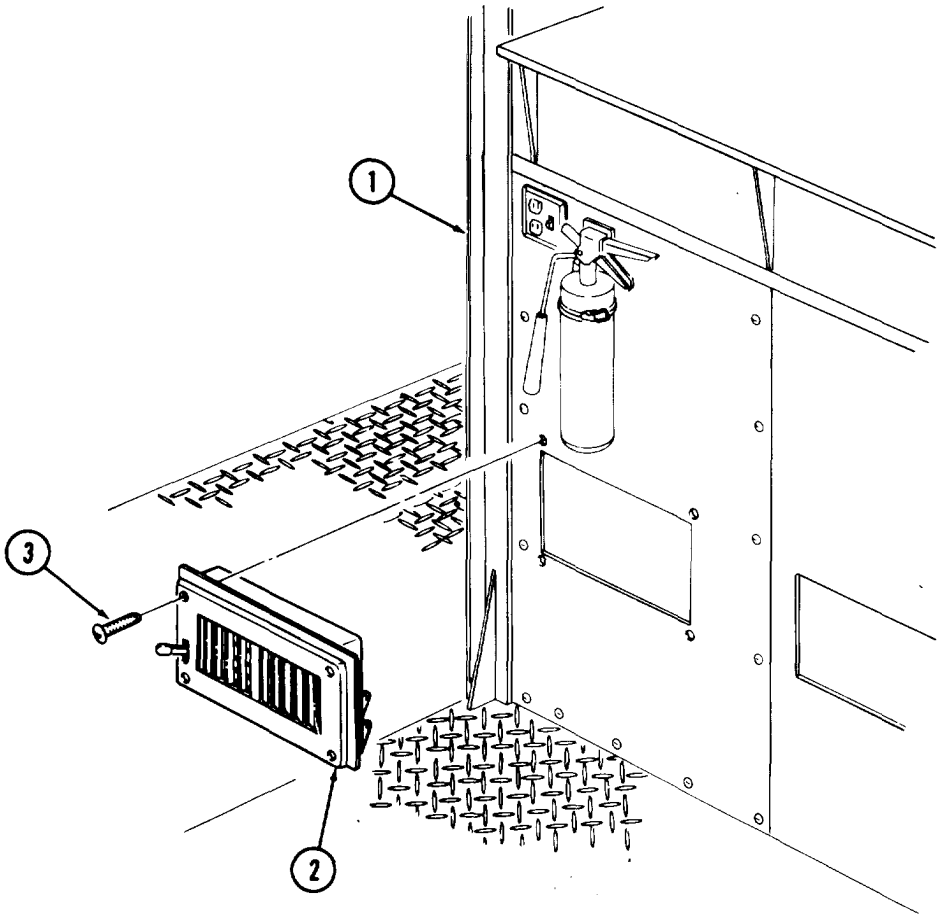

15-40. CEILING REAR COVER REPLACEMENT (M820A1)

THIS TASK COVERS:

a. Removal **b. Installation**

INITIAL SETUP

APPLICABLE MODELS
M820A1

TOOLS
General mechanic's tool kit (Appendix B, Item 1)

MATERIALS/PARTS
Fibrous glass felt insulation (Appendix C, Item 16)
Adhesive (Appendix C, Item 2)
Primer (Appendix C, Item 31)

REFERENCES (TM)
TM 9-2320-260-10
TM 9-2320 -260-34P-2

EQUIPMENT CONDITION
- Parking brake set (TM 9-2320-260-10).
- Van body sides fully expanded and secured (TM 9-2320-260-10).

GENERAL SAFETY INSTRUCTIONS
Gloves, eyeshields, and dust mask must be worn during rear cover replacement.

WARNING

Van body is insulated with fibrous glass felt insulation. Gloves, eyeshields, and dust mask must be worn during rear cover replacement, Failure to do so may result in injury to personnel.

a. Removal

Remove eight screws (3), thirty-two screws (4), and rear cover (5) from rear header (2) and air duct (1).

b. Installation

NOTE

- Insulate areas of metal-to-metal contact with zinc chromate primer.
- Apply adhesive to metal surfaces.
- Insulate entire structure with fibrous glass felt insulation.

Install rear cover (5) on air duct (1) and rear header (2) with thirty-two screws (4) and eight screws (3).

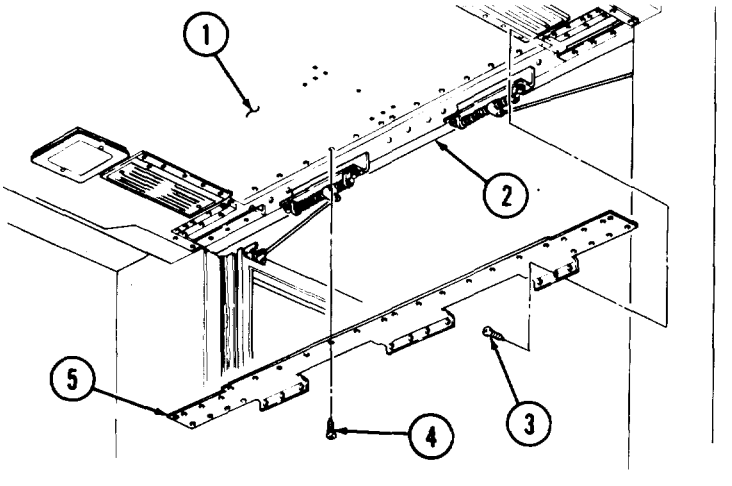

FOLLOW-ON TASK: Retract van body sides (TM 9-2320-260-10).

15-41. CEILING REAR COVER REPLACEMENT (M820, M820A2)

THIS TASK COVERS:

a. Removal **b. Installation**

INITIAL SETUP

APPLICABLE MODELS
M820, M820A2

TOOLS
General mechanic's tool kit (Appendix B, Item 1)

MATERIALS / PARTS
Fibrous glass felt insulation (Appendix C, Item 16)
Adhesive (Appendix C, Item 2)
Primer (Appendix C, Item 31)

REFERENCES (TM)
TM 9-2320-260-10
TM 9-2320-260-34P-2

EQUIPMENT CONDITION
Parking brake set (TM 9-2320-260-10).

GENERAL SAFETY INSTRUCTIONS
Gloves, eyeshields, and dust mask must be worn during rear cover replacement.

WARNING

Van body is insulated with fibrous glass felt insulation. Gloves, eyeshields, and dust mask must be worn during rear cover replacement. Failure to do so may result in injury to personnel.

a. Removal

1. Remove four screws (7) from rear cover (5) and two plates (1).
2. Remove eight screws (4), eleven screws (6), and rear cover (5) from rear header (3) and air duct (2).

b. Installation

NOTE

- Insulate areas of metal-to-metal contact with zinc chromate primer.
- Apply adhesive to metal surfaces.
- Insulate entire structure with fibrous glass felt insulation.

1. Install rear cover (5) on rear header (3) and air duct (2) with eleven screws (6) and eight screws (4).
2. Install four screws (7) in rear cover (5) and two plates (1).

15-41. CEILING REAR COVER REPLACEMENT (M820, M820A) (Contd)

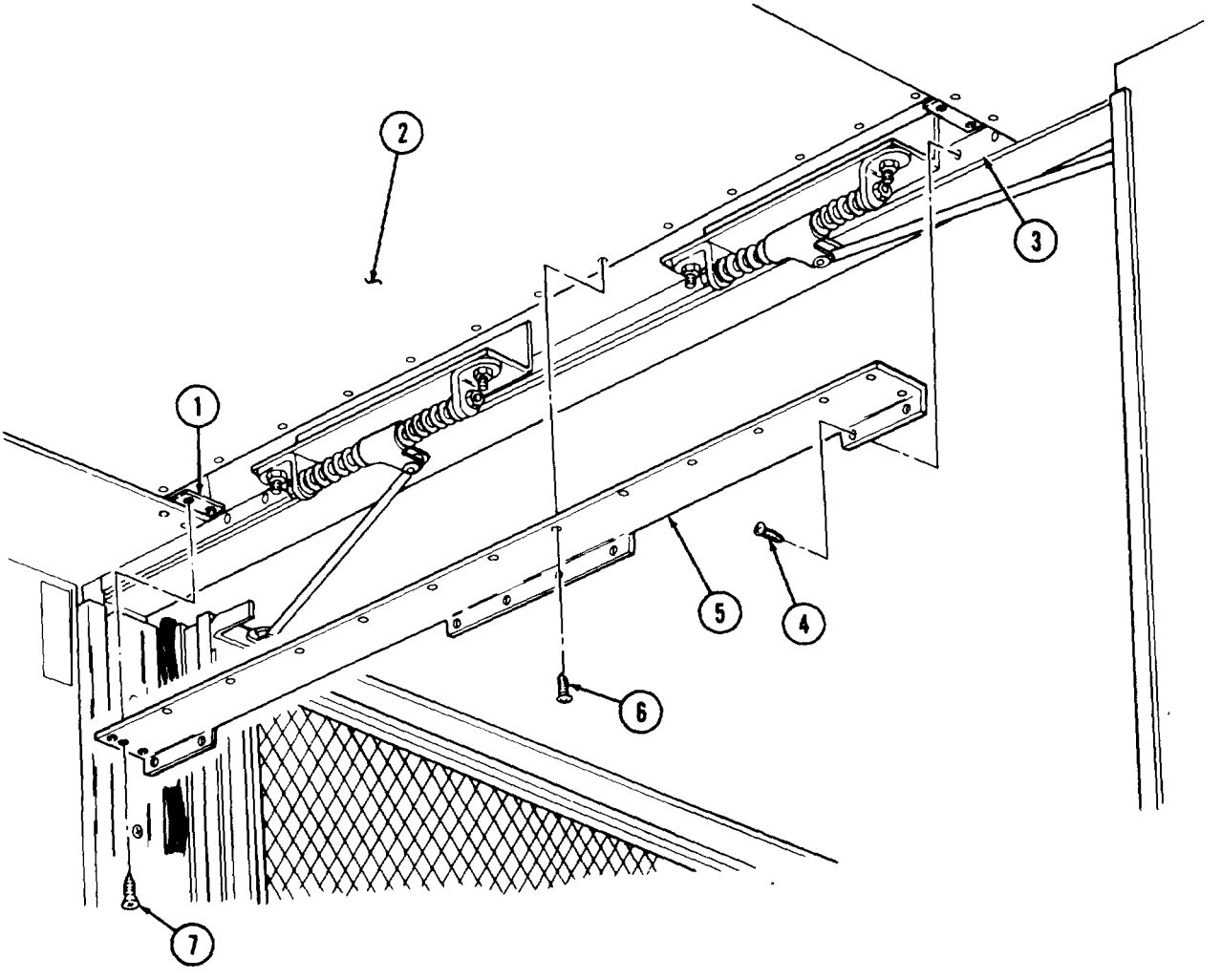

15-42. CEILING TRANSITION MAINTENANCE (M820, M820A2)

THIS TASK COVERS:

a. Removal
b. Disassembly
c. Assembly
d. Installation

INITIAL SETUP

APPLICABLE MODELS
M820, M820A2

TOOLS
General mechanic's tool kit (Appendix B, Item 1)
Rivet gun (Appendix B, Item 120)

MATERIALS/PARTS
Twenty-four rivets (Appendix D, Item 365)
Four seals (Appendix D, Item 446)
Fibrous glass felt insulation (Appendix C, Item 16)
Adhesive (Appendix C, Item 2)

REFERENCES (TM)
TM 9-2320-260-10
TM 9-2320 -260-34P-2

EQUIPMENT CONDITION
- Parking brake set (TM 9-2320-260-10),
- Van body sides fully expanded and secured **(TM 9-2320-260-10).**
  Ceiling filler and side panels removed (para. 15-44).

GENERAL SAFETY INSTRUCTIONS
Gloves, eyeshields, and dust mask must be worn during transition replacement.

WARNING

Van body is insulated with fibrous glass felt insulation. Gloves, eyeshields, and dust mask must be worn during transition replacement. Failure to do so may result in injury to personnel.

NOTE

Assistant will help with steps **1** through 3.

1, Remove twenty-six screws (5) and enclosure **(4)** from air duct (2) and transition (3).
2. Remove seven screws (8) from support (7) and van ceiling (l).
3. Remove twenty-four screws (6) and transition (3) from van ceiling (l).

b. Disassembly

1. Remove seven rivets (11), retainer (10), seal (9), and support (7) from transition (3). Discard rivets (11) and seal (9).
2. Remove ten rivets (12), two retainers (13), and seals (14) from transition (3). Discard seals (14) and rivets (12).
3. Remove seven rivets (18), retainer (19), and seal (17) from transition (3). Discard seal (17) and rivets (18).
4. Remove ten screws (15) and two angles (16) from transition (3).

15-42. CEILING TRANSITION MAINTENANCE (M820, M820A2) (Contd)

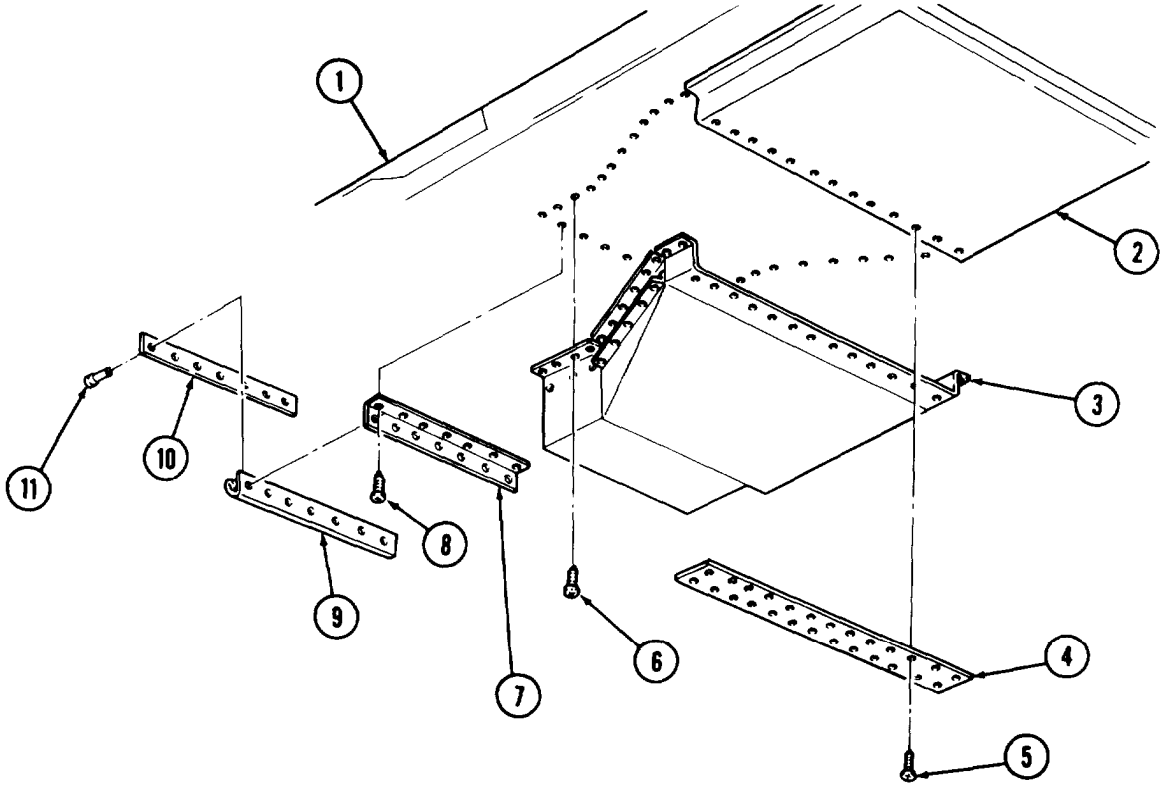

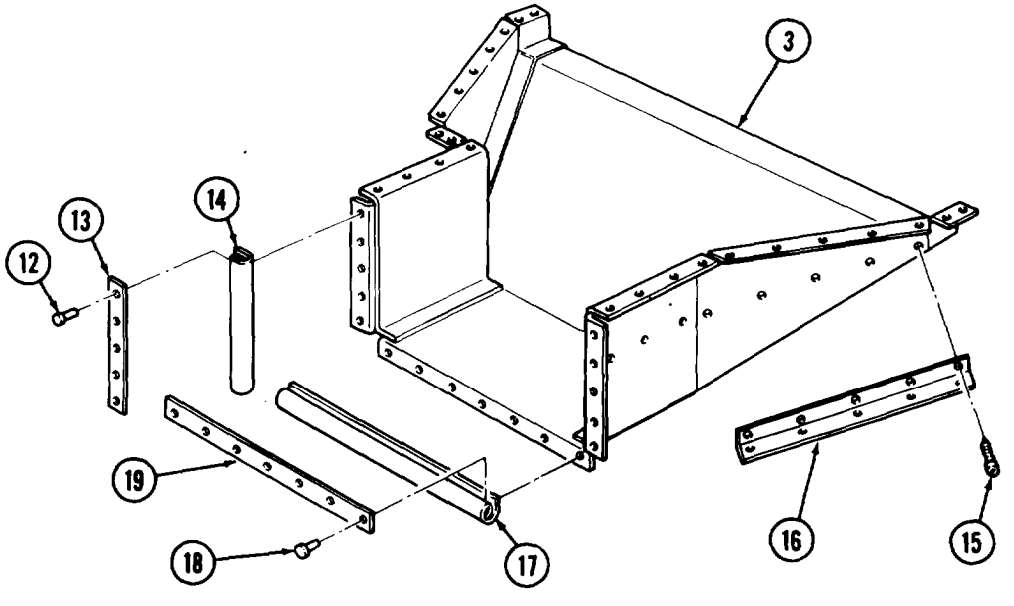

15-42. CEILING TRANSITION MAINTENANCE (M820, M820A2) (Contd)

c. Assembly

1. Install two angles (4) on transition (2) with ten screws (3).

NOTE

Apply adhesive to both rubber and metal surfaces.

2. Install new seal (5) and retainer (7) on transition (2) with seven new rivets (6).
3. Install two new seals (1) and retainers (8) on transition (2) with ten new rivets (9).
4. Install support (15), new seal (17), and retainer (18) on transition (2) with seven new rivets (19).

d. Installation

NOTE

- Insulate inside of transition with fibrous glass felt insulation.
- Assistant will help with steps 1 through 3.

1. Install transition (2) on van ceiling (10) with twenty-four screws (14).
2. Secure support (15) to van ceiling (10) with seven screws (16).
3. Install enclosure (13) on air duct (11) and transition (2) with twenty-six screws (12).

15-42. CEILING TRANSITION MAINTENANCE (M820, M820A2) (Contd)

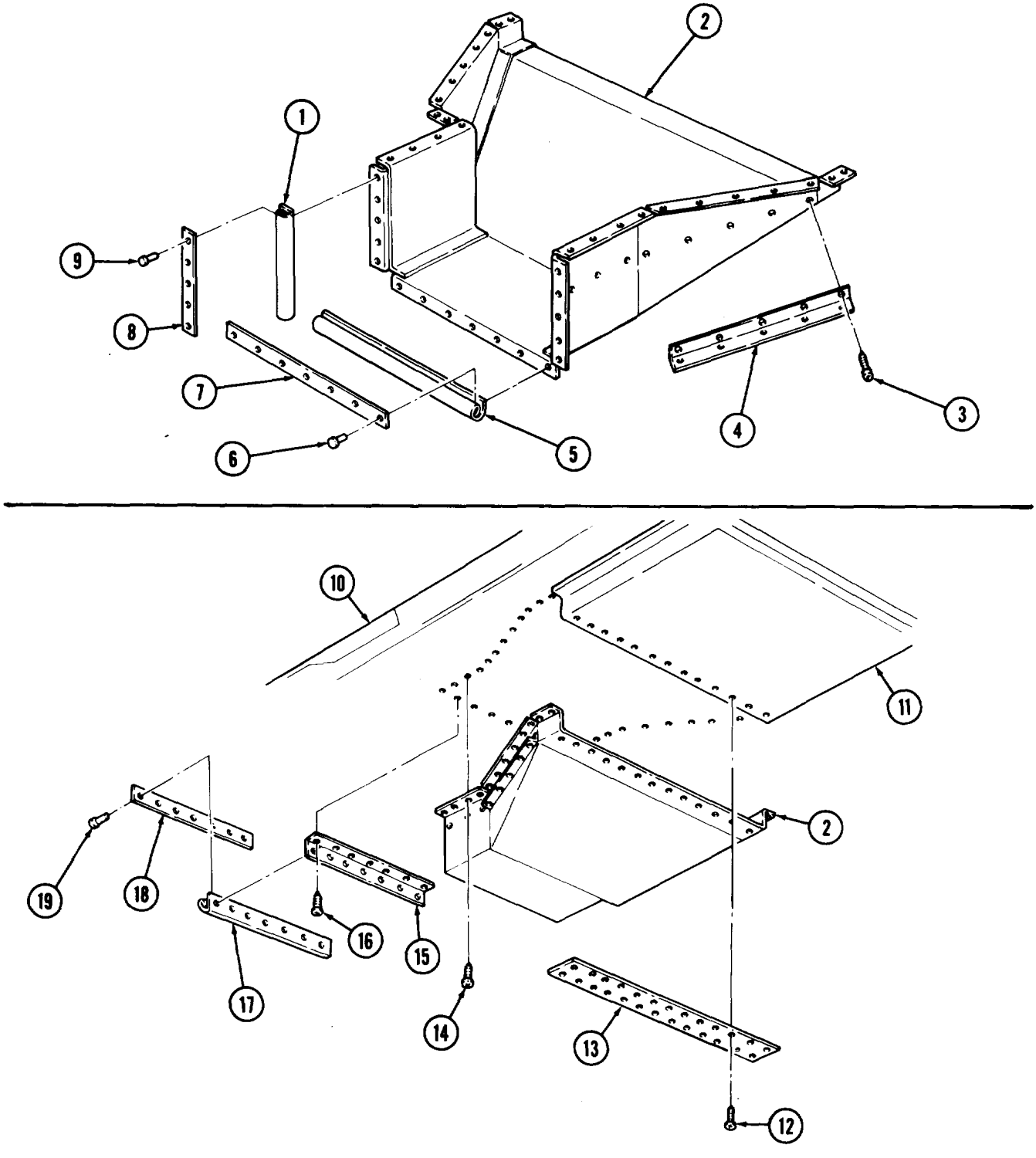

FOLLOW-ON TASKS: • Install ceiling filler and side panels (M820, M820A2) (para. **15-44).**
• Retract van body sides (TM 9-2320-260-10).

15-43. CEILING TRANSITION MAINTENANCE (M820A1)

THIS TASK COVERS:

a. Removal
b. Disassembly
c. Assembly
d. Installation

INITIAL SETUP

APPLICABLE MODELS
M820A1

TOOLS
General mechanic's tool kit (Appendix B, Item 1)

MATERIALS/PARTS
Four seals (Appendix D, Item 461)
Two seals (Appendix D, Item 460)
Adhesive (Appendix C, Item 2)
Fibrous glass felt insulation (Appendix C, Item 16)

REFERENCES (TM)
TM 9-2320-260-10
TM 9-2320-260-34P-2

EQUIPMENT CONDITION
- Parking brake set (TM 9-2320-260-10).
- Van body sides fully expanded and secured (TM 9-2320-260-10).

GENERAL SAFETY INSTRUCTIONS
Gloves, eyeshields, and dust mask must be worn during transition replacement.

WARNING

Van body is insulated with fibrous glass felt insulation. Gloves, eyeshields, and dust mask must be worn during transition replacement. Failure to do so may result in injury to personnel.

1. Remove thirty-six screws (4) and enclosure (5) from filler panel (2) and transition (3).
2. Remove sixteen screws (8) and liner (7) from van ceiling (1) and transition (3).
3. Remove twenty screws (6) and transition (3) from van ceiling (1).

b. Disassembly

Remove two seals (9), seals (12), seal (11), and seal (10) from transition (3). Discard seals (9), (12), (11), and (10).

NOTE

Apply adhesive to seals before installation.

Install new seal (11), seal (10), two new seals (12), and new seals **(9)** on transition (3).

d. Installation

NOTE

Insulate inside of transition with fibrous glass felt insulation.

1. Install transition (3) on van ceiling (1) with twenty screws (6).
2. Install liner (7) on van ceiling (1) and transition (3) with sixteen screws (8).
3. Install enclosure (5), filler panel (2) and transition (3) on van ceiling (1) with thirty-six screws (4).

15-43. CEILING TRANSITION MAINTENANCE (M820A1) (Contd)

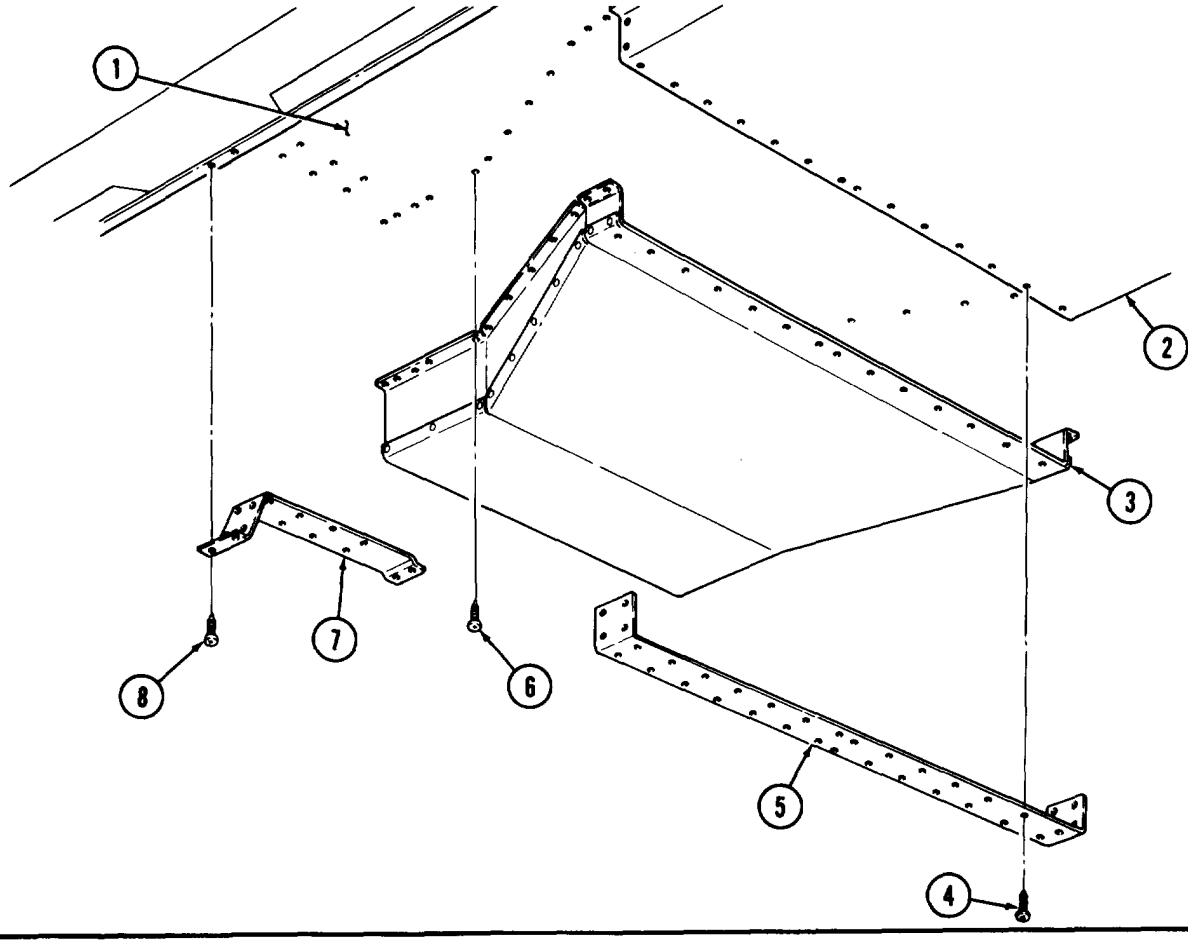

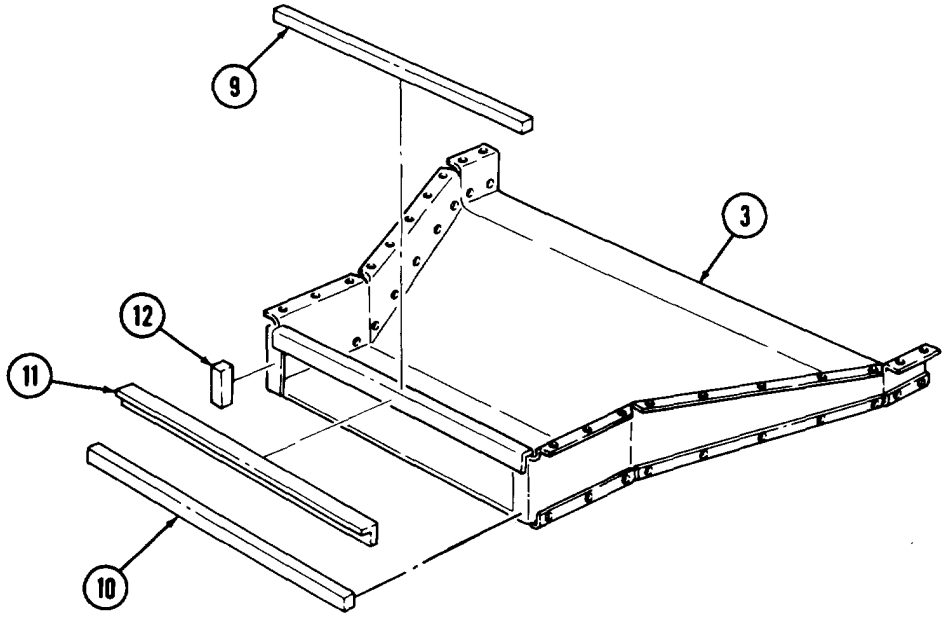

FOLLOW-ON TASK: Retract van body sides (TM 9-2320-260-10).

15-44. CEILING FILLER AND SIDE PANELS REPLACEMENT

THIS TASK COVERS:

a. Left Side Panel and Filler Removal
b. Right Side Panel and Filler Removal
c. Right Side Panel and Filler Installation
d. Left Side Panel and Filler Installation

INITIAL SETUP

APPLICABLE MODELS
M820, M820A2

TOOLS
General mechanic's tool kit (Appendix B, Item 1)

MATERIALS/PARTS
Fibrous glass felt insulation (Appendix C, Item 16)

PERSONNEL REQUIRED
Two

REFERENCES
TM 9-2320-260-10
TM 9-2320-260-20
TM 9-2320-260-34P-2

EQUIPMENT CONDITION
- Van body sides fully expanded and secured (TM 9-2320-260-10).
- Fluorescent light fixtures removed (para. 15-92).
- Blackout and emergency light fixtures removed (para. 15-91).
- Blackout switch removed (TM 9-2320-260-20).
- Ceiling rear cover removed (para. 15-41).
- 3-phase receptacles and 400 Hz receptacles removed (TM 9-2320-260-20).
- Telephone jack removed (left side) (TM 9-2320-260-20).
- Cord box removed (TM 9-2320-260-20).
- Registers and deflectors removed (para. 15-38).

GENERAL SAFETY INSTRUCTIONS
Gloves, eyeshields, and dust mask must be worn during ceiling filler and side panel replacement.

WARNING

Van body is insulated with fibrous glass felt insulation. Gloves, eyeshields, and dust mask must be worn during ceiling filler and side panel replacement. Failure to do so may result in injury to personnel.

a. Left Side Panel and Filler Removal

1. Remove seventy-nine screws (6) and side panel (5) from van ceiling (3), air ducts (4), and transition (7).
2. Remove three screws (1) and filler (2) from transition (7).

b. Right Side Panel and Filler Removal

1. Remove seventy-nine screws (10) and side panel (11) from van ceiling (3), air ducts (4), and transition (7).
2. Remove five screws (9) and filler (8) from transition (7).

NOTE

Insulate entire structure with fibrous glass felt insulation.

c. Right Side Panel and Filler Installation

1. Install filler (8) on transition (7) with five screws (9).
2. Install side panel (11) on van ceiling (3), air ducts (4), and transition (7) with seventy-nine screws (10).

15-44. CEILING FILLER AND SIDE PANELS REPLACEMENT (Cont'd)

d. Left Side Panel and Filler Installation

1. Install filler (2) on transition (7) with three screws (1).
2. Install side panel (5) on van ceiling (3), air ducts (4), and transition (7) with seventy-nine screws (6).

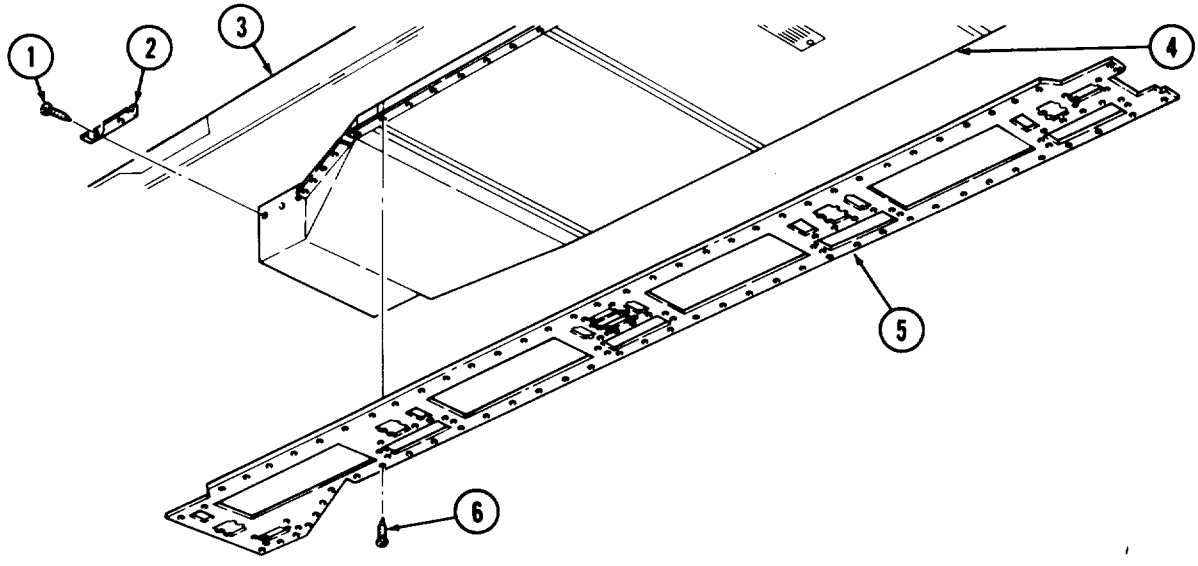

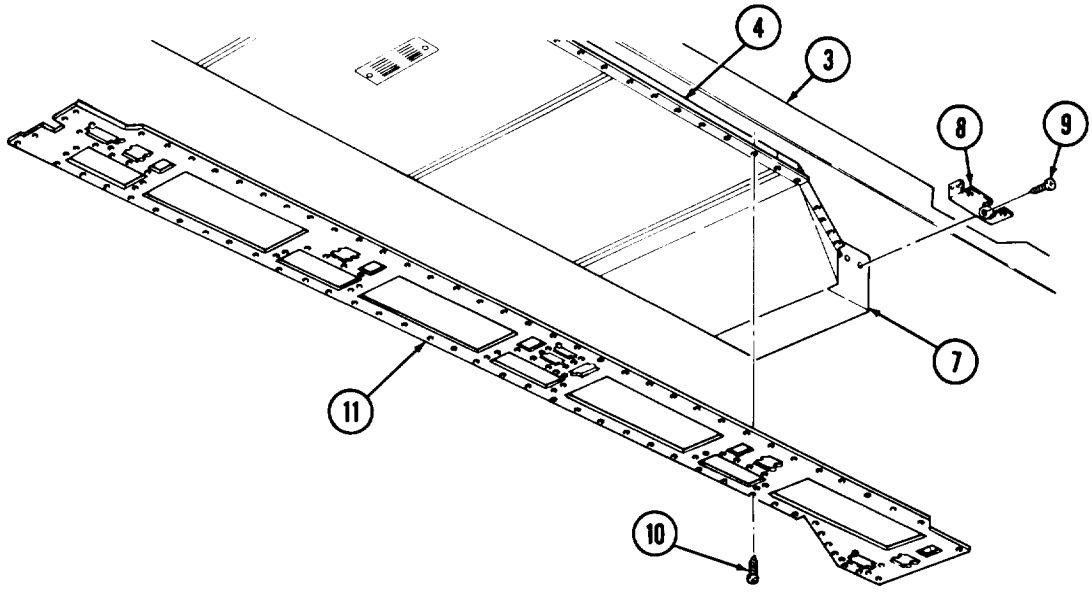

FOLLOW-ON TASKS:
- Install registers and deflectors (para. 15-38).
- Install cord box (TM 9-2320-260-20).
- Install telephone jack (left side) (TM 9-2320-260-20).
- Install 3-phase receptacles and 400 Hz receptacles (TM 9-2320-260-20).
- Install ceiling rear cover (para. 15-41).
- Install blackout switch (TM 9-2320-260-20).
- Install blackout and emergency light fixtures (para. 15-91).
- Install fluorescent light fixtures (para, 15-92).
- Retract van body sides (TM 9-2320-260-10).

15-45. CEILING AIR DUCTS AND SUPPORTS REPLACEMENT

THIS TASK COVERS:

a. Removal **b. Installation**

INITIAL SETUP

APPLICABLE MODELS
M820, M820A1, M82A2

TOOLS
General mechanic's tool kit (Appendix B, Item 1)

MATERIALS/PARTS
Primer (Appendix C, Item 31)

PERSONNEL REQUIRED
Two

REFERENCES (TM)
TM 9-2320-260-10
TM 9-2320 -260-34P-2

EQUIPMENT CONDITION
- Parking brake set (TM 9-2320-260-10).
- Van body sides fully expanded and secured (TM 9-2320-260-10).
- Ceiling rear cover removed (para. 15-40 or 15-41).
- Ceiling filler and side panels removed (M820, M820A2) (para. 15-44).
- Ceiling registers and deflectors removed (M820A1) (para. 15-38).
- Ceiling lights removed (M820A1) (para. 15-93).

GENERAL SAFETY INSTRUCTIONS
Gloves, eyeshields, and dust mask must be worn during duct and support replacement.

WARNING

Van body is insulated with fibrous glass felt insulation. Gloves, eyeshields, and dust mask must be worn during duct and support replacement. Failure to do so may result in injury to personnel.

NOTE
- Perform step 1 for M820 and M820A2 vehicles.
- Perform step 2 for M820A1 vehicles.

1. Remove fifty-two screws (8) and two enclosures (9) from air ducts (4) and (7).
2. Remove seventy-two screws (8) and two enclosures (9) from air ducts (4) and (7).
3. Remove fourteen screws (6) from air ducts (4) and (7) and support (3).
4. Remove sixteen screws (5) and air duct (4) from ceiling (1).
5. Remove eighteen screws (10) and air duct (7) from ceiling (1).
6. Remove nine screws (2) and support (3) from ceiling (1).

NOTE
- Perform step 7 for M820 and M820A2 vehicles.
- Perform step 8 for M820A1 vehicles.

7. Remove fifty-two screws (21) and two enclosures (20) from air ducts (11) and (18).
8. Remove seventy-two screws (21) and two enclosures (20) from air ducts (11) and (18).
9. Remove eight screws (17) and four screws (19) from air ducts (11) and (18) and supports (12) and (14).
10. Remove eighteen screws (16) and air duct (18) from ceiling (1).

15-45. CEILING AIR DUCTS AND SUPPORTS REPLACEMENT (Cont'd)

11. Remove sixteen screws (16) and air duct (11) from ceiling (1).
12. Remove ten screws (15) and support (14) from ceiling (1).
13. Remove eleven screws (13) and support (12) from ceiling (1).

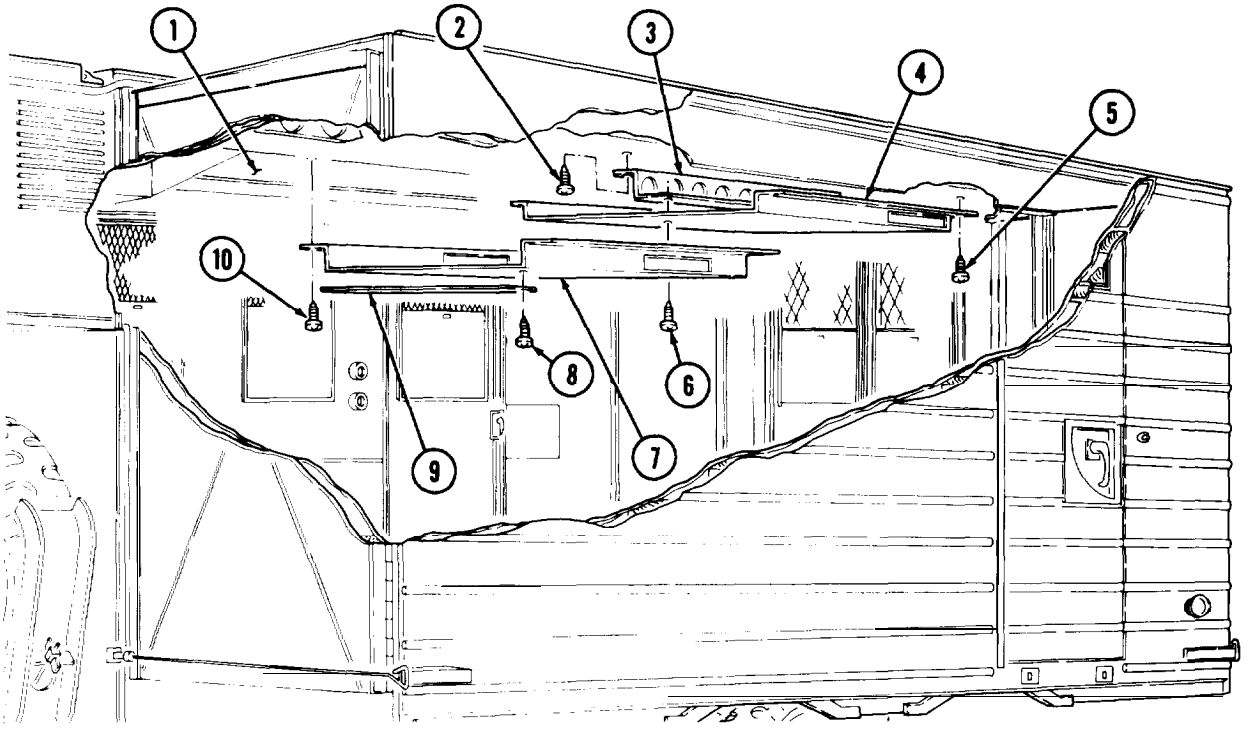

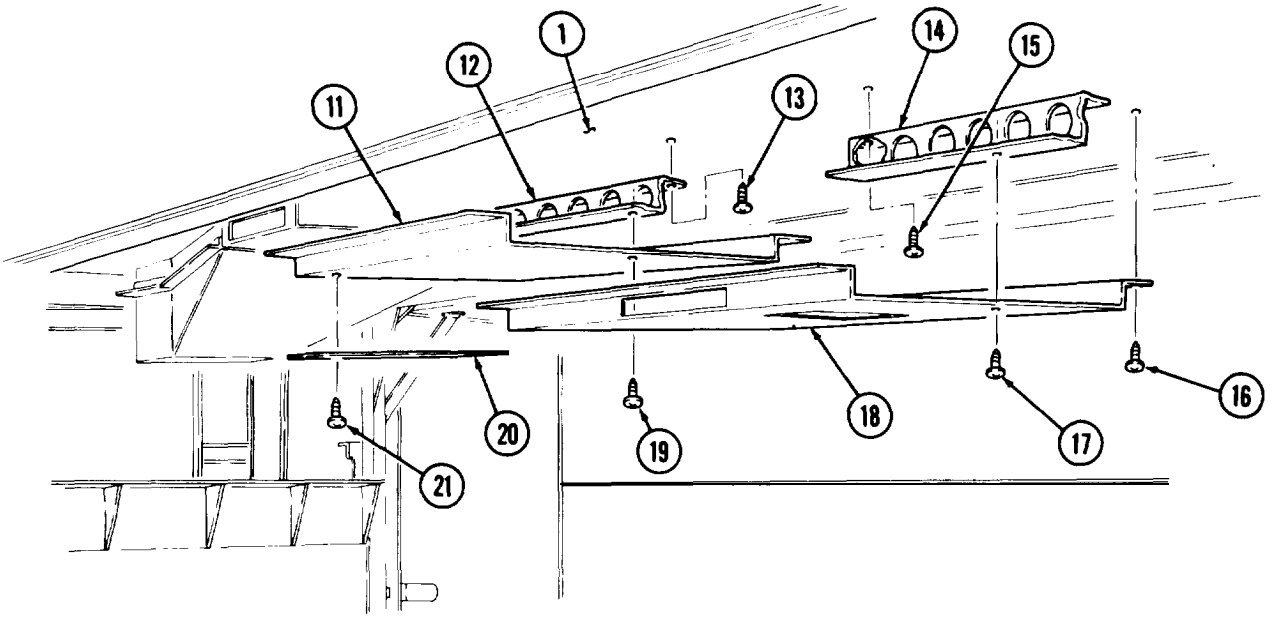

15-45. CEILING AIR DUCTS AND SUPPORTS REPLACEMENT (Cont'd)

b. Installation

NOTE

Insulate areas of dissimilar metal-to-metal contact with zinc chromate primer.

1. Install support (2) on ceiling (3) with eleven screws (4).
2. Install support (5) on ceiling (3) with ten screws (6).
3. Install air duct (1) on ceiling (3) with sixteen screws (7).
4. Install air, duct (9) on ceiling (3) with eighteen screws (7).
5. Secure air ducts (1) and (9) to supports (2) and (5) with four screws (10) and eight screws (8).

NOTE

- Perform step 6 for M820 and M820A2 vehicles.
- Perform step 7 for M820A1 vehicles.

6. Install two enclosures (11) on air ducts (1) and (9) with fifty-two screws (12).
7. Install two enclosures (11) on air ducts (1) and (9) with seventy-two screws (12).
8. Install support (14) on ceiling (3) with nine screws (13).
9. Install air duct (18) on ceiling (3) with eighteen screws (21).
10. Install air duct (15) on ceiling (3) with sixteen screws (16).
11. Secure air ducts (18) and (15) to support (14) with fourteen screws (17).

NOTE

- Perform step 12 for M820 and M820A2 vehicles.
- Perform step 13 for M820A1 vehicles.

12. Install two enclosures (20) on air ducts (15) and (18) with fifty-two screws (19)
13. Install two enclosures (20) on air ducts (15) and (18) with seventy-two screws (19).

15-45. CEILING AIR DUCTS AND SUPPORTS REPLACEMENT (Cont'd)

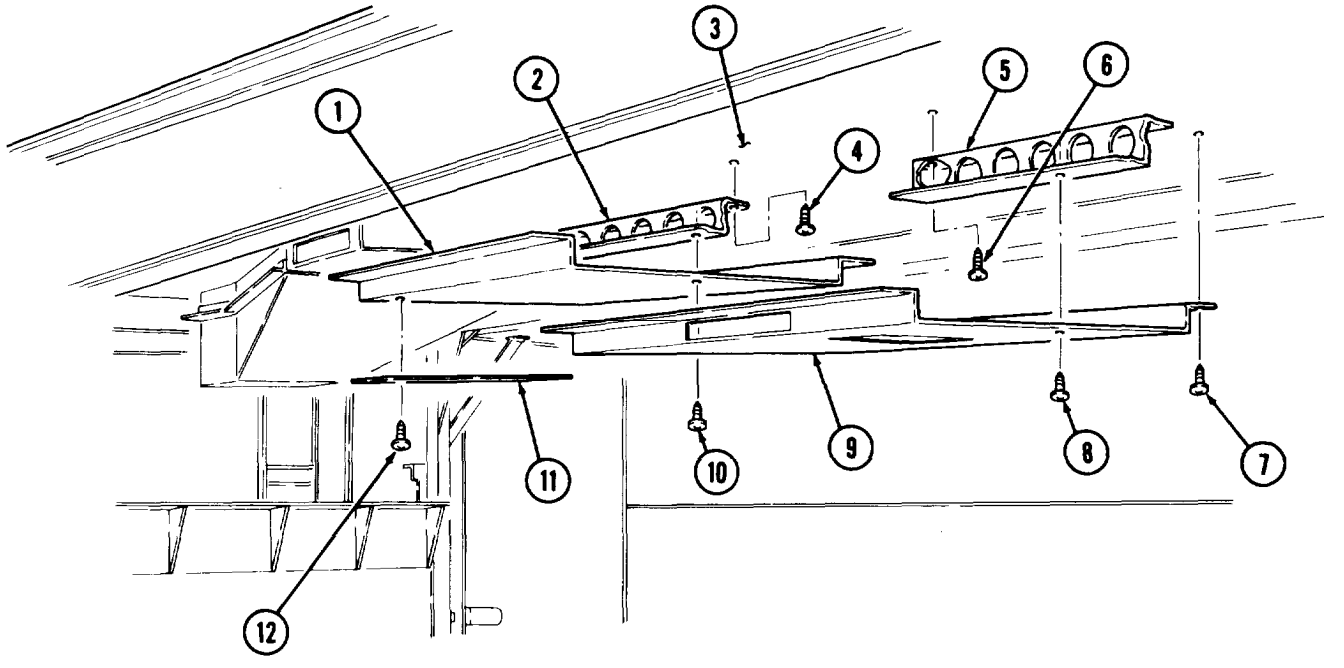

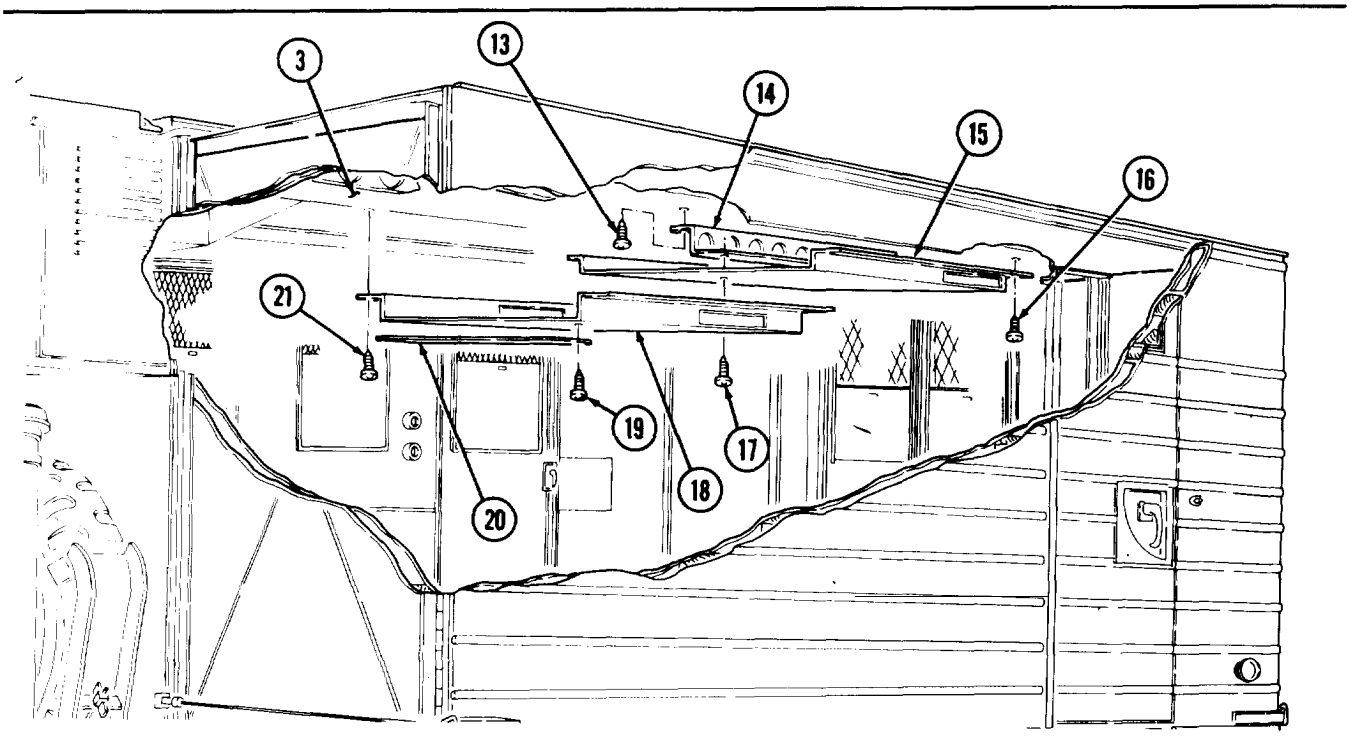

FOLLOW-ON TASKS:
- Install ceiling lights (M82A1) (para. 15-93).
- Install ceiling registers and deflectors (M820A1) (para. 15-38).
- Install ceiling filler and side panels (M820, M820A2) (para. 15-44).
- Install ceiling rear cover (para, 15-40 or 15-41).
- Retract van body sides (TM 9-2320-260-10).

15-46. BONNET FRAME REPAIR

THIS TASK COVERS:

a. Disassembly **b. Assembly**

INITIAL SETUP

APPLICABLE MODELS
M820, M820A1, M820A2

TOOLS
General mechanic's tool kit (Appendix B, Item 1)
Rivet gun (Appendix B, Item 120)

MATERIALS/PARTS
One hundred forty rivets (Appendix D, Item 346)
One hundred thirty-one rivets (Appendix D, Item 352)
Eighty rivets (Appendix D, Item 363)
Fibrous glass felt insulation (Appendix C, Item 16)
Primer (Appendix C, Item 31)
Sealing compound (Appendix C, Item 45)

REFERENCES (TM)
TM 9-2320-260-20
TM 9-2320-260-34P-2

EQUIPMENT CONDITION
l Heaters removed (TM 9-2320-260-20).
. Air conditioner removed (para. 15-49).
l Bonnet access door removed (para. 15-47).
l Bonnet door removed (para. 15-48).

GENERAL SAFETY INSTRUCTIONS
Gloves, eyeshids, and dust mask must be worn during bonnet frame repair.

WARNING

Van body is insulated with fibrous glass felt insulation. Gloves, eyeshields, and dust mask must be worn during bonnet frame repair. Failure to do so may result in injury to personnel.

a. Disassembly

1. Remove twenty-seven screws (6) and drip molding (5) from bonnet frame (15).
2. Remove seventeen screws (14) and door panel (13) from bonnet frame (15).
3. Remove four screws (1) and plate (2) from outer panel (3) and bonnet frame (15).
4. Remove thirty-eight rivets (4), twenty-four rivets (8), and outer panels (3) and (7) from bonnet frame (15) an bonnet lower panel (12). Discard rivets (4) and (8).

NOTE

- Left filler is shown in illustration.
- Assistant will help with step 5.

5. Remove sixty-four rivets (11), thirty-one rivets (10), bonnet lower panel (12), and two fillers (9) from bonnet frame (15). Discard rivets (11) and (10).

15-46. BONNET FROME REPAIR (Contd)

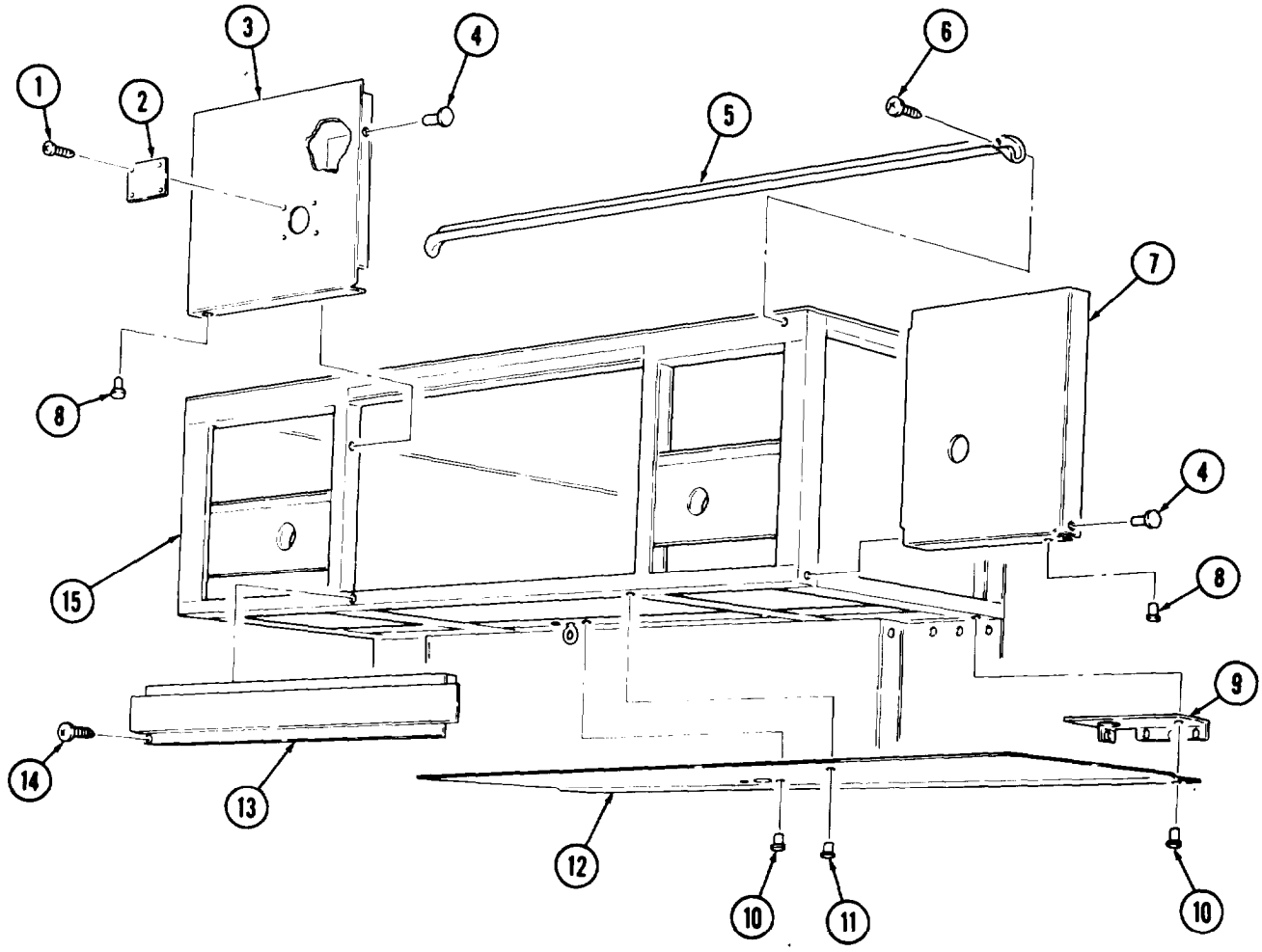

15-46. BONNET FRAME REPAIR (Cont'd)

NOTE

Left and right heater ducts are replaced the same. This procedure covers the right side heater duct.

6. Remove two screws (6) from heater duct (7) and support (18).
7. Remove four rivets (16) and two speed nuts (17) from support (18). Discard rivets (16).
8. Remove three screws (15) and support (18) from front wall (19).
9. Remove thirty-six rivets (8), heater duct (7), and insulation (9) from bonnet floor (3). Discard rivets (8) and insulation (9).
10. Remove sixteen rivets (11), twenty-four rivets (12), thirty-six rivets (14), and inner panels (13) and (20) from bonnet frame (10) and bonnet floor (3). Discard rivets (11), (12), and (14).
11. Remove three screws (4) and post (5) from bonnet floor (3).

NOTE

Assistant will help with step 12.

12. Remove fortv-three rivets (1). thirtv-five rivets (2). and bonnet floor (3) from bonnet frame (10) and front wall (19). Discard rivets (1) and (2).

b. Assembly

NOTE

- Insulate areas of dissimilar metal-to-metal contact with zinc chromate primer.
- Seal area between exterior joints with sealing compound.
- Insulate all enclosed structures with fibrous glass felt insulation.
- Assistant will help with step 1.

1. Install bonnet floor (3) on bonnet frame (10) and front wall (19) with forty-three new rivets (1) and thirty-five new rivets (2).
2. Install post (5) on bonnet floor (3) with three screws (4).
3. Install inner panels (13) and (20) on bonnet frame (10) and bonnet floor (3) with thirty-six new rivets (14), twenty-four new rivets (12), and sixteen new rivets (11).

NOTE

Left and right heater ducts are replaced the same. This procedure covers the right side heater duct.

4. Install new insulation (9) and heater duct (7) on bonnet floor (3) with thirty-six new rivets (8).
5. Install support (18) on front wall (19) with three screws (15).
6. Install two speed nuts (17) on support (18) with four new rivets (16).
7. Install heater duct (7) on support (18) with two screws (6).

15-46. BONNET FRAME REPAIR (Contd)

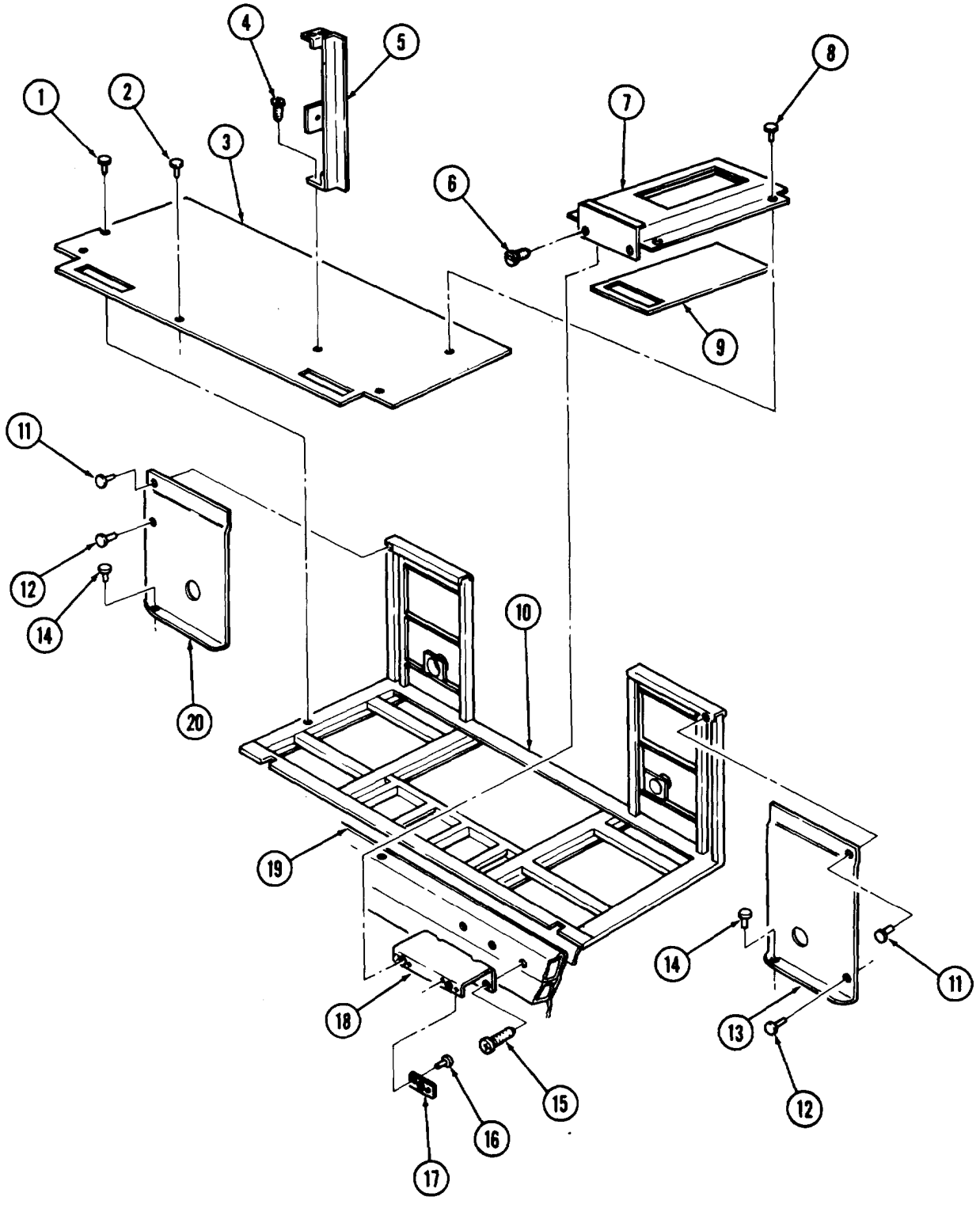

15-46. BONNET FRAME REPAIR (Contd)

NOTE

- Left filler is shown in illustration.
- Assistant will help with step 8.

8. Install two fillers (9) and bonnet lower panel (12) on bonnet frame (15) with sixty-four new rivets (11) and thirty-one new rivets (10).
9. Install outer panels (3) and (7) on bonnet frame (15) and bonnet lower panel (12) with twenty-four new rivets (8) and thirty-eight new rivets (4).
10. Install plate (2) on outer panel (3) and bonnet frame (15) with four screws (1).
11. Install door panel (13) on bonnet frame (15) with seventeen screws (14).
12. Install drip molding (5) on bonnet frame (15) with twenty-seven screws (6).

15-46. BONNET FRAME REPAIR (Contd)

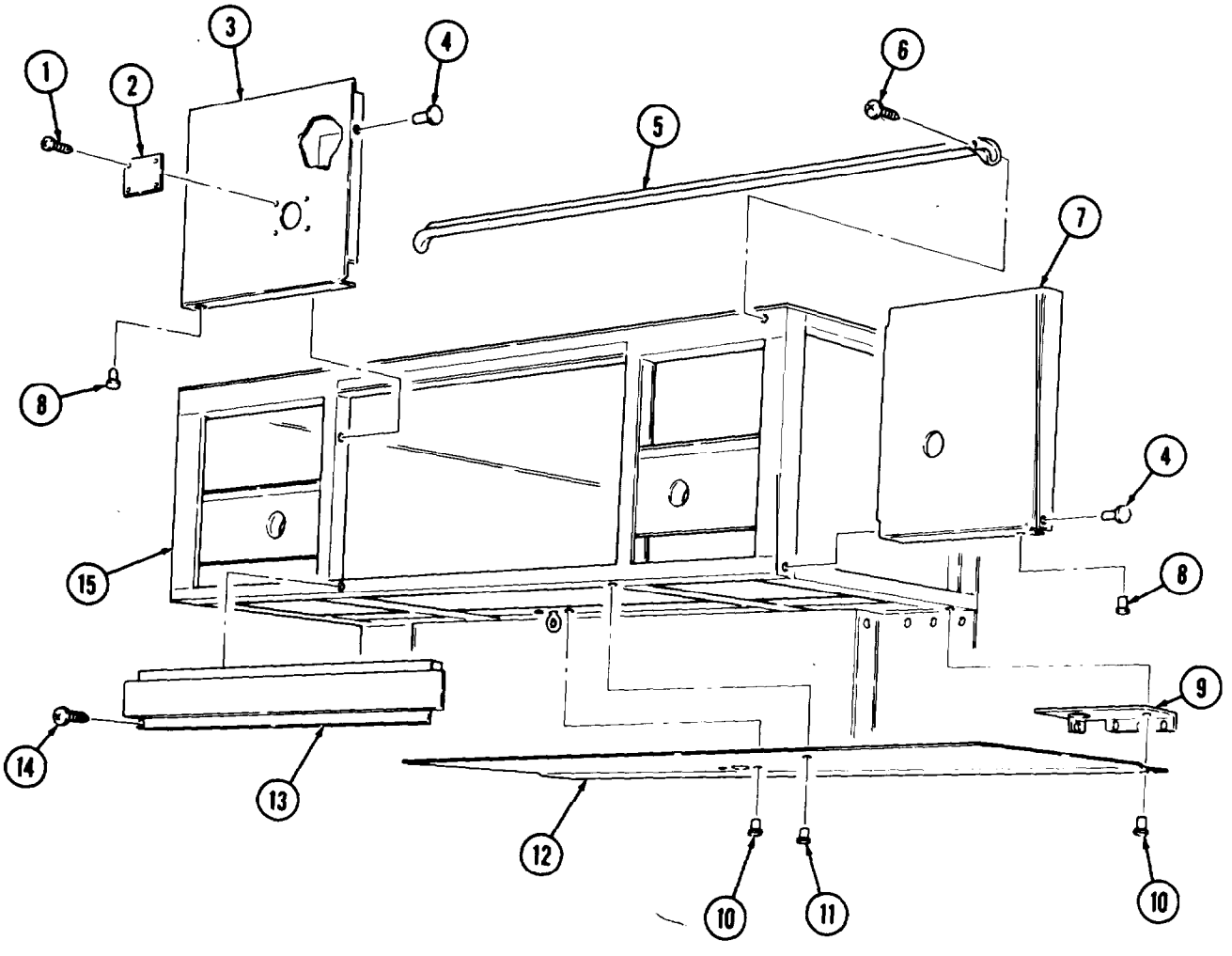

FOLLOW-ON TASKS:
- Install bonnet door (para. 15-48).
- Install bonnet access door (para. 15-47).
- Install air conditioner (para. 15-49).
- Install heaters (TM 9-2320-260-20).

15-47. BONNET ACCESS DOOR MAINTENANCE

THIS TASK COVERS:

a. Removal
b. Disassembly
c. Cleaning and Inspection
d. Assembly
e. Installation

INITIAL SETUP

APPLICABLE MODELS
M820, M820A1, M820A2

TOOLS
General mechanic's tool kit (Appendix B, Item 1)
Rivet gun (Appendix B, Item 120)

MATERIALS/PARTS
Seventy-four rivets (Appendix D, Item 364)
Seventy-four rivets (Appendix D, Item 367)
Seal (Appendix D, Item 445)
Seal (Appendix D, Item 459)
Fibrous glass felt insulation (Appendix C, Item 16)

MATERIALS/PARTS (Contd)
Primer (Appendix C, Item 31)
sealing compound (Appendix C, Item 45)

REFERENCES (TM)
TM 9-2320-260-10
TM 9-2320 -260-34P-2

EQUIPMENT CONDITION
Parking brake set (TM 9-2320-260-10).

GENERAL SAFETY INSTRUCTIONS
Gloves, eyeshields, and dust mask must be worn during bonnet access door maintenance.

WARNING

Van body is insulated with fibrous glass felt insulation. Gloves, eyeshields, and dust mask must be worn during bonnet access door maintenance. Failure to do so may result in injury to personnel.

NOTE

Assistant will help with removal.

Remove twelve screws (2) and access door (3) from bonnet frame (1).

b. Disassembly

1. Remove twelve screws (6), hinge (5), and seal (4) from door frame (21). Discard seal (4).
2. Remove four screws (9) and two angle brackets (8) from inner panel (7).
3. Remove four screws (11), rod (12), and holder bracket (10) from inner panel (7).
4. Remove screw (15), two nuts (13), screws (16), and bracket (14) from inner panel (7).

NOTE

Assistant will help with step 5.

5. Remove thirty-three nuts (17), screws (23), seventy-four rivets (24), outer panel (22), three retainers (18), and seal (20) from door frame (21). Discard seal (20).

NOTE

Perform step 6 if inner panel is to be replaced (subtask c.).

6. Remove seventy-four rivets (19) and inner panel (7) from door frame (21). Discard rivets (19).

c. Cleaning and Inspection

1. For general cleaning instructions, refer to para. 2-8.
2. For general inspection instructions, refer to para. 2-9.

15-47. BONNET ACCESS DOOR MAINTENANCE (Cont'd)

3. Inspect hinge (5) for bends, breaks, and proper operation. Replace hinge (5) if bent, broken, or operating improperly.
4. Inspect three retainers (18) for bends and breaks. Replace retainers (18) if bent or broken.
5. Inspect angle brackets (8), holder bracket (10), and rod (12) for cracks and breaks. Replace angle brackets (8), holder bracket (10), or rod (12) if cracked or broken.
6. Inspect outer panel (22) and inner panel (7) for cracks and punctures. Replace outer panel (22) or inner panel (7) if cracked or punctured.
7. Inspect door frame (21) for bends, cracks, and breaks. Replace door frame (21) if bent, cracked, or broken.

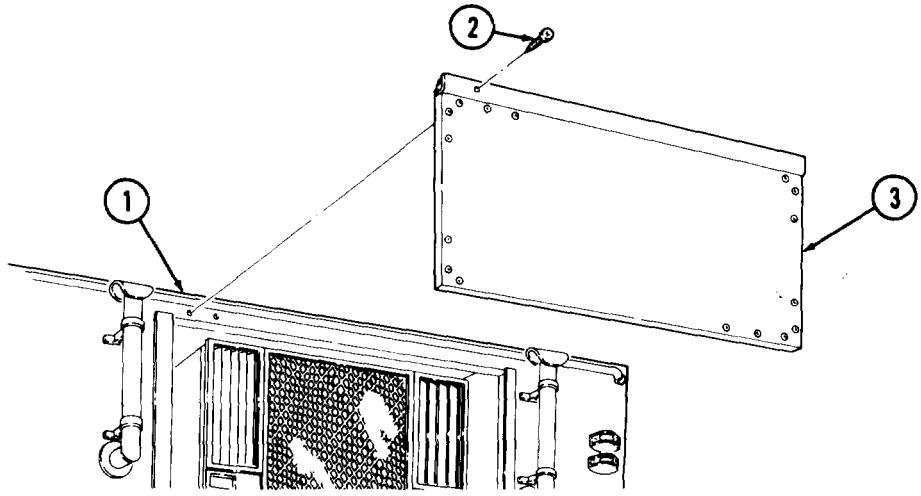

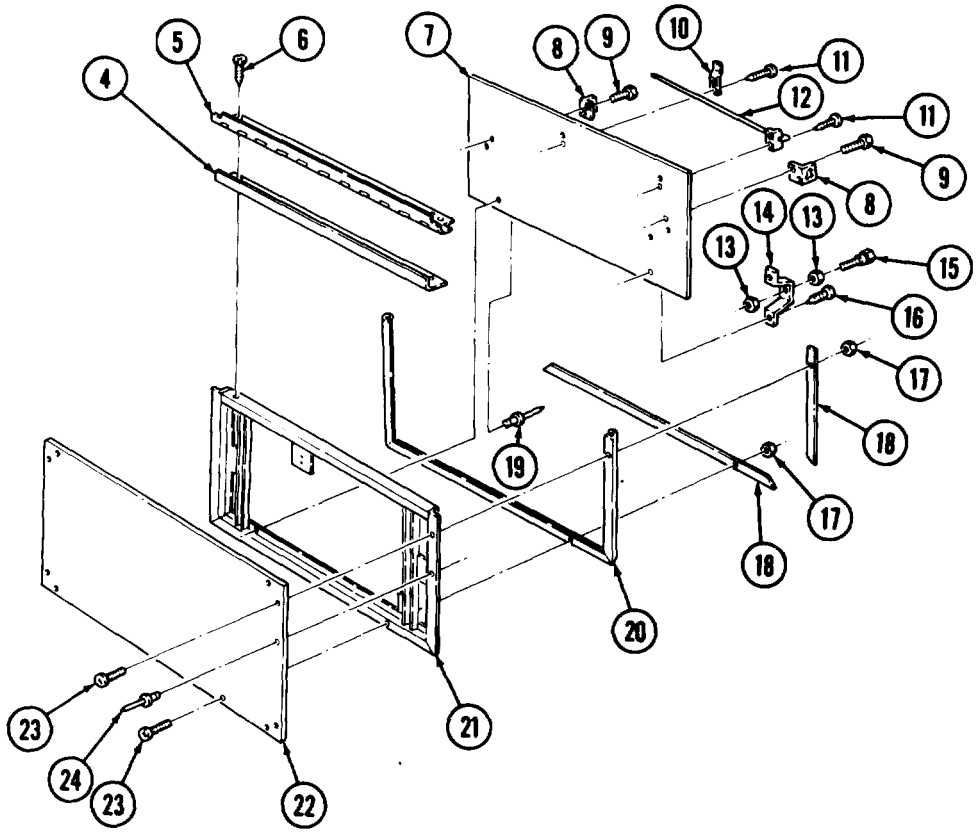

15-47. BONNET ACCESS DOOR MAINTENANCE (Cont'd)

d. Assembly

NOTE

- Insulate areas of dissimilar metal-to-metal contact with zinc chromate primer.
- Seal between exterior joints with sealing compound.
- Insulate all enclosed structures with fibrous glass felt insulation.
- Perform step 1 if inner panel is to be installed (subtask c.).
- Assistant will help with steps 1 and 2.

1. Install inner panel (4) on door frame (18) with seventy-four new rivets (16).
2. Install new seal (1), three retainers (15), and outer panel (19) on door frame (18) with thirty-three screws (20), nuts (14), and seventy-four new rivets (21).
3. Install holder bracket (7) and rod (9) on inner panel (4) with four screws (8).
4. Install screw (12) and two nuts (10) on bracket (11).
5. Install bracket (11) on inner panel (4) with two screws (13).
6. Install two angle brackets (5) on inner panel (4) with four screws (6).
7. Install new seal (1) and hinge (2) on door frame (18) with twelve screws (3).

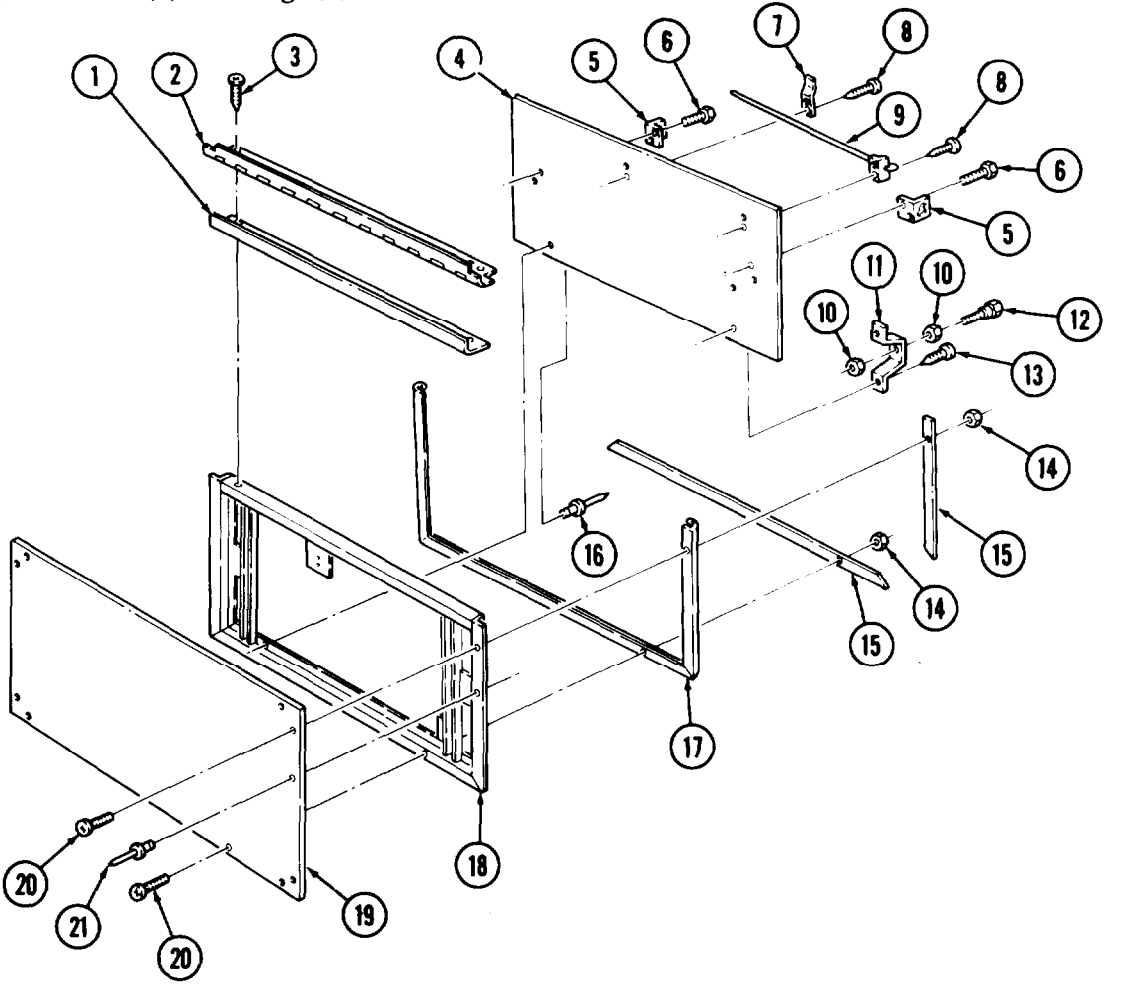

15-47. BONNET ACCESS DOOR MAINTENANCE (Contd)

Assistant will help with installation.

Install access door (24) on bonnet frame (22) with twelve screws (23).

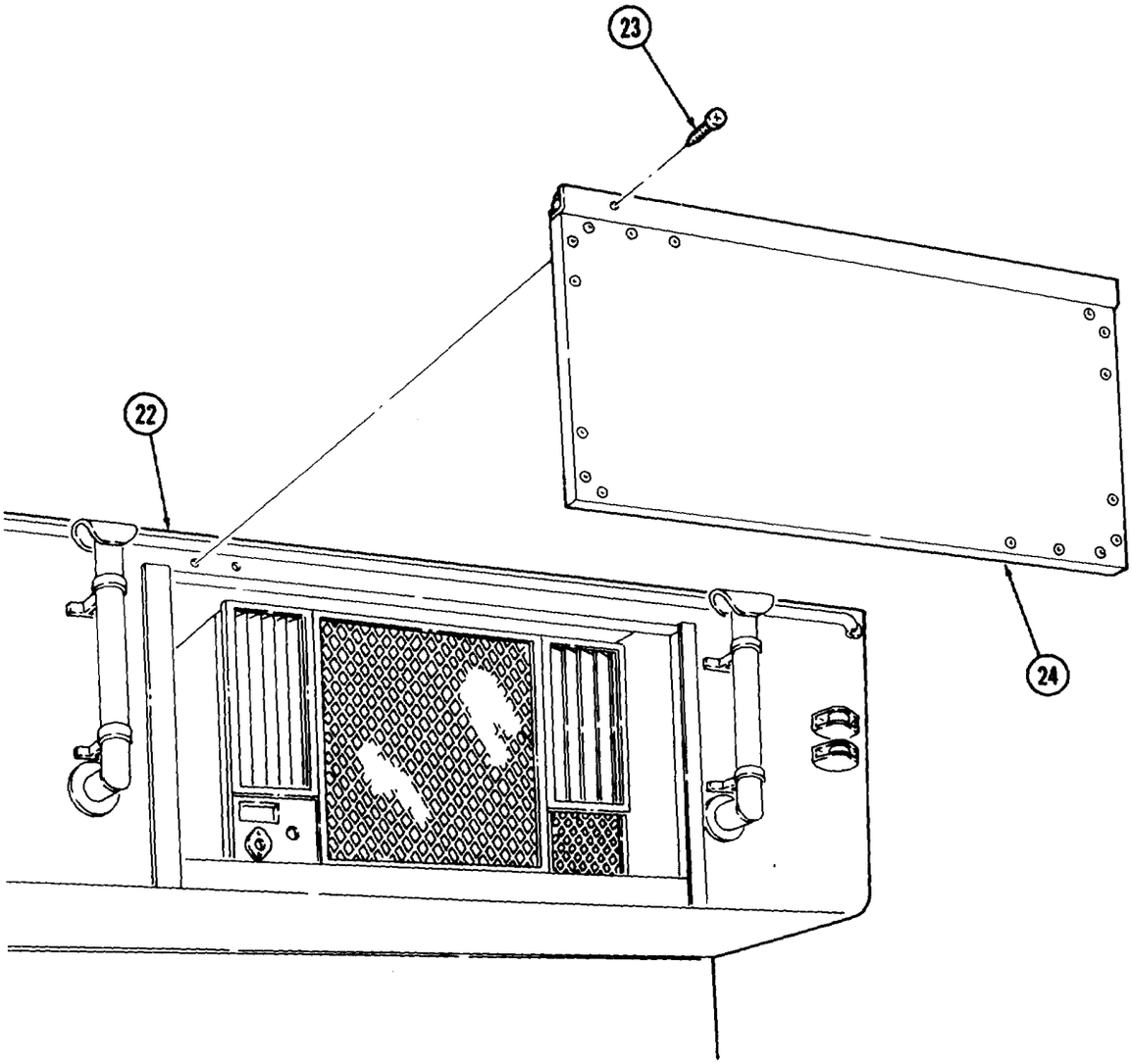

15-48. BONNET DOOR MAINTENANCE

THIS TASK COVERS:

a. Removal
b. Disassembly
c. Cleaning and Inspection
d. Assembly
e. Installation

INITIAL SETUP

APPLICABLE MODELS
M820, M820A1, M820A2

TOOS
General mechanic's tool kit (Appendix B, Item 1)
Rivet gun (Appendix B, Item 120)

MATERIALS/PARTS
Thirty-eight rivets (Appendix D, Item 352)
Fifty-two rivets (Appendix D, Item 363)
Six seals (Appendix D, Item 444)
Seal (Appendix D, Item 445)

MATERIALS/PARTS (Contd)l
Fibrous glass felt insulation (Appendix C, Item 16)
Primer (Appendix C, Item 31)
Sealing compound (Appendix C, Item 45)

REFERENCES (TM)
TM 9-2320-260-10
TM 9-2320 -260-34P-2

EQUIPMENT CONDITION
Parking brake set (TM 9-2320-260-10).

GENERAL SAFETY INSTRUCTIONS
Gloves, eyeshields, and dust mask must be worn during bonnet door maintenance.

WARNING

Van body is insulated with fibrous glass felt insulation. Gloves, eyeshields, and dust mask must be worn during bonnet door maintenance. Failure to do so may result in injury to personnel.

a. Removal

1. Remove two screws (6) and washers (5) and open bonnet door (7).

NOTE

Assistant will help with step 2.

2. Remove seven screws (1) and bonnet door (7) from bonnet (2).
3. Remove four screws (3) and lever (4) from bonnet door (7).

15-48. BONNET DOOOR MAINTENANCE (Contd)

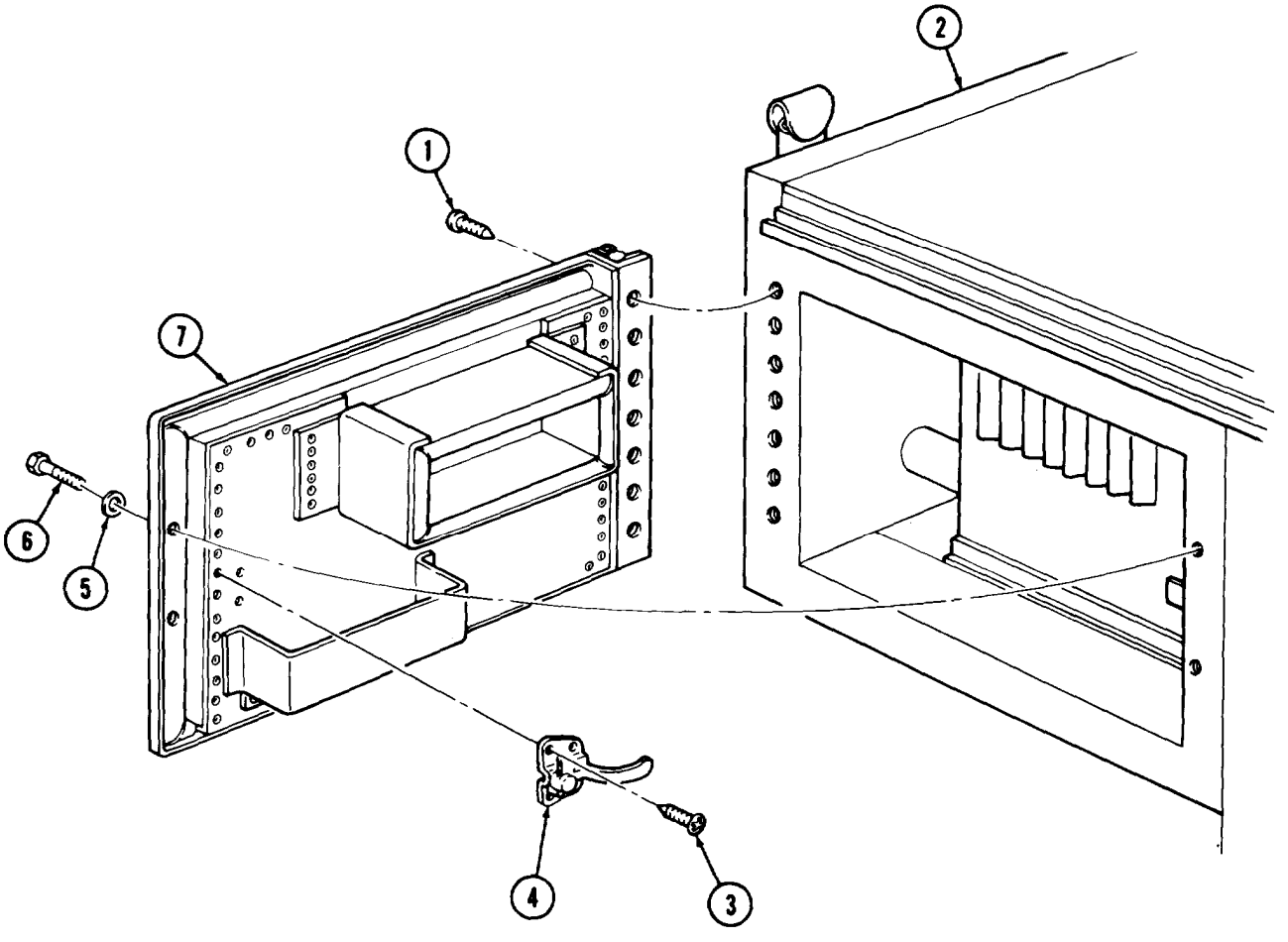

15-48. BONNET DOOR MAINTENANCE (Cont'd)

b. Disassembly

1. Remove seven screws (21), spacer plate (20), seal (19), hinge (18), and seal (17) from frame (11). Discard seals (19) and (17).
2. Remove eighteen nuts (24), screws (13), and two retainers (23) from outer panel (12), frame (11), and seal (22).

NOTE

Assistant will help with step 3.

3. **Remove** seventeen rivets (14), four screws (15), washers (16), and outer panel (12) from frame (11). Discard rivets (14).
4. Remove thirty-two rivets (29) and intake (5) from inner panel (26). Discard rivets (29).
5. Remove twelve nuts (6), screws (l), two retainers (2), seals (3), and channels (4) from intake (5). Discard seals (3).
6. Remove twenty-two nuts (7), screws (33), two retainers (32), seals (31), and channels (30) from intake (5). Discard seals (31).
7. Remove seven nuts (8), screws (10), retainer (9), and seal (22) from frame (11). Discard seal (22).

NOTE

Assistant will help with step 8.

8. Remove thirty-five rivets (25) and inner panel (26) from frame (11). Discard rivets (25).
9. Remove six rivets (27) and toolbox (28) from inner panel (26), Discard rivets (27).

15-48. BONNET DOOR MAINTENANCE (Cont'd)

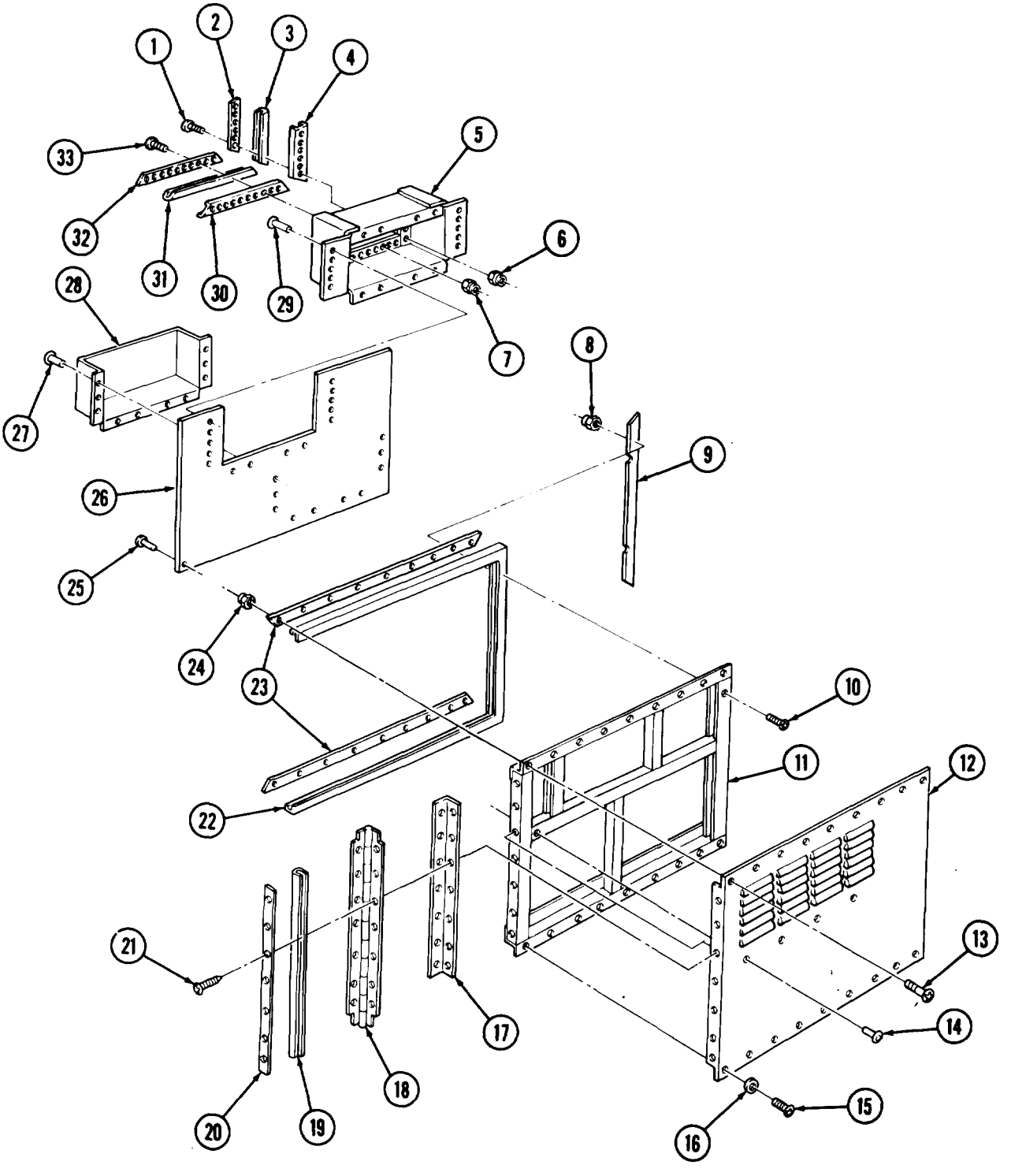

15-48 BONNET DOOR MAINTENANCE (Cont'd)

c. Cleaning and Inspection

1. For general cleaning instructions, refer to para. 2-8.
2. For general inspection instructions, refer to para, 2-9.
3. Replace all bonnet door parts failing inspection.
4. Inspect frame (11) for bends, breaks, cracks, and warpage. Replace bonnet door (34) if frame (11) is bent, broken, cracked, or warped.

d. Assembly

NOTE

- Insulate areas of dissimilar metal-to-metal contact with zinc chromate primer.
- Seal between all exterior joints with sealing compound.
- Insulate all enclosed structures with fibrous glass felt insulation.
- Assistant will help with step 2.

1. Install toolbox (28) on inner panel (26) with six new rivets (27).
2. Install inner panel (26) on frame (11) with thirty-five new rivets (25).
3. Install new seal (22) and retainer (9) on frame (11) with seven screws (10) and nuts (8).
4. Install two channels (30), new seals (31), and retainers (32) on intake (5) with twenty-two screws (33) and nuts (7).
5. Install two channels (4), new seals (3), and retainers (2) on intake (5) with twelve screws (1) and nuts (6).
6. Install intake (5) on inner panel (26) with thirty-two new rivets (29).

NOTE

Assistant will help with step 7.

7. Install outer panel (12) on frame (11) with seventeen new rivets (14), four washers (16), and *screws* (15).
8. Install two retainers (23) on seal (22), frame (11), and outer panel (12) with eighteen screws (13) and nuts (24).
9. Install new seal (17), hinge (18), new seal (19), and spacer plate (20) on frame (11) with seven screws (21).

1. Install lever (38) on bonnet door (34) with four screws (37).

NOTE

Assistant will help with step 2.

2. Position bonnet door (34) on bonnet (36) and install with seven screws (35).
3. Close bonnet door (34) and secure with two washers (39) and screws (40).

15-48. BONNET DOOR MAINTENANCE (Cont'd)

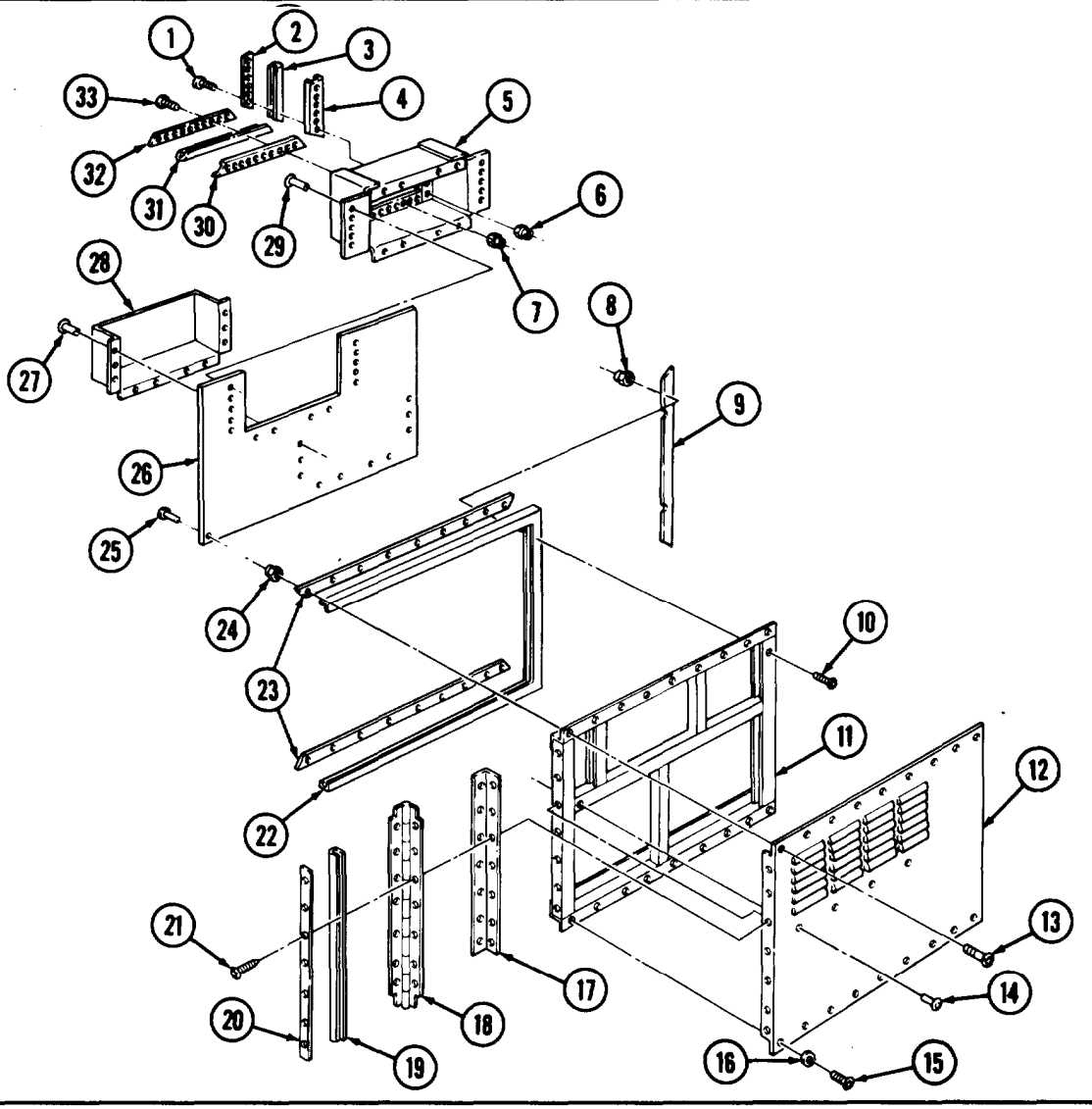

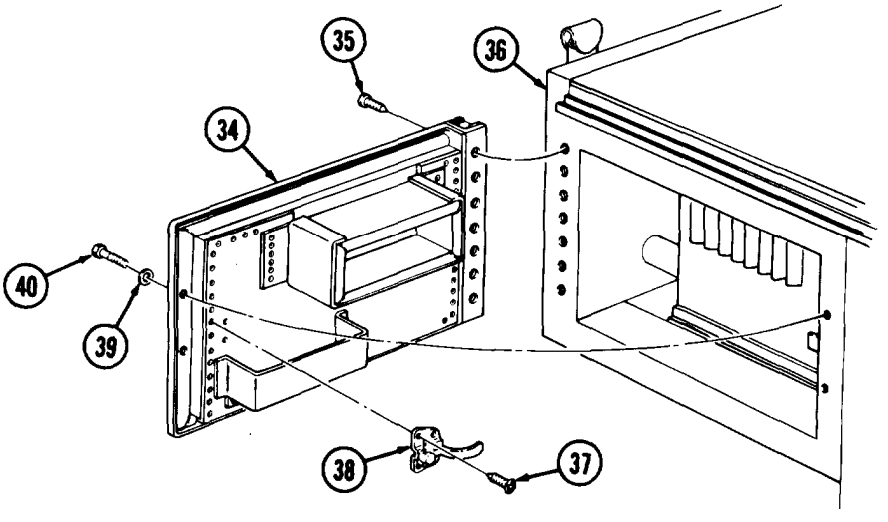

15-49. AIR CONDITIONER REPLACEMENT

THIS TASK COVERS:

a. Removal **b. Installation**

INITIAL SETUP

APPLICABI.E MODELS

M820, M820A1, M820A2

TOOLS

General mechanic's tool kit (Appendix B, Item 1)
Tool kit, electrical (Appendix B, Item 106)
Lifting device
Chains

MATERIALS/PARTS

Fourteen lockwashers (Appendix D, Item 215)
Cotter pin (Appendix D, Item 37)
Thirteen lockwashers (Appendix D, Item 257)
Two lockwashers (Appendix D, Item 255)

REFERENCES (TM)

TM 9-2320-260-10
TM 9-2320-260-20
TM 9-2320-260-34P-2

EQUIPMENT CONDITION

- External Power source disconnected (TM 9-2320-260-10)
- Battery ground cable disconnected (TM 9-2320-260-20).
- Companion seat lowered (TM 9-2320-260-10).
- Windshield lowered and cab top removed (TM 9-2320-260-10).
- Air conditioner drain tube removed (TM 9-2320-260-20).
- Bonnet door removed (para. 15-48).

GENERAL SAFETY INSTRUCTIONS

- All personnel must stand clear during lifting operations.
- Ensure lifting capacity is greater than weight of air conditioner.

a. Removal

NOTE

Screw quantity for steps 1, 2, and 4 may differ from vehicle to vehicle. Record screw quantity for installation,

1. Remove sixteen screws (7) and lower angle bracket (6) from lower panel mounting angle (8) and two mounting angles (5).
2. Remove twelve screws (10) and lower panel mounting angle (8) from bonnet (12).
3. Remove fourteen screws (4), snap (3), fourteen lockwashers (2), and condenser guard (1) from air conditioner (11). Discard lockwashers (2).
4. Remove four screws (9) and two mounting angles (5) from bonnet (12).

15-49. AIR CONDITIONER REPLACEMENT (Contd)

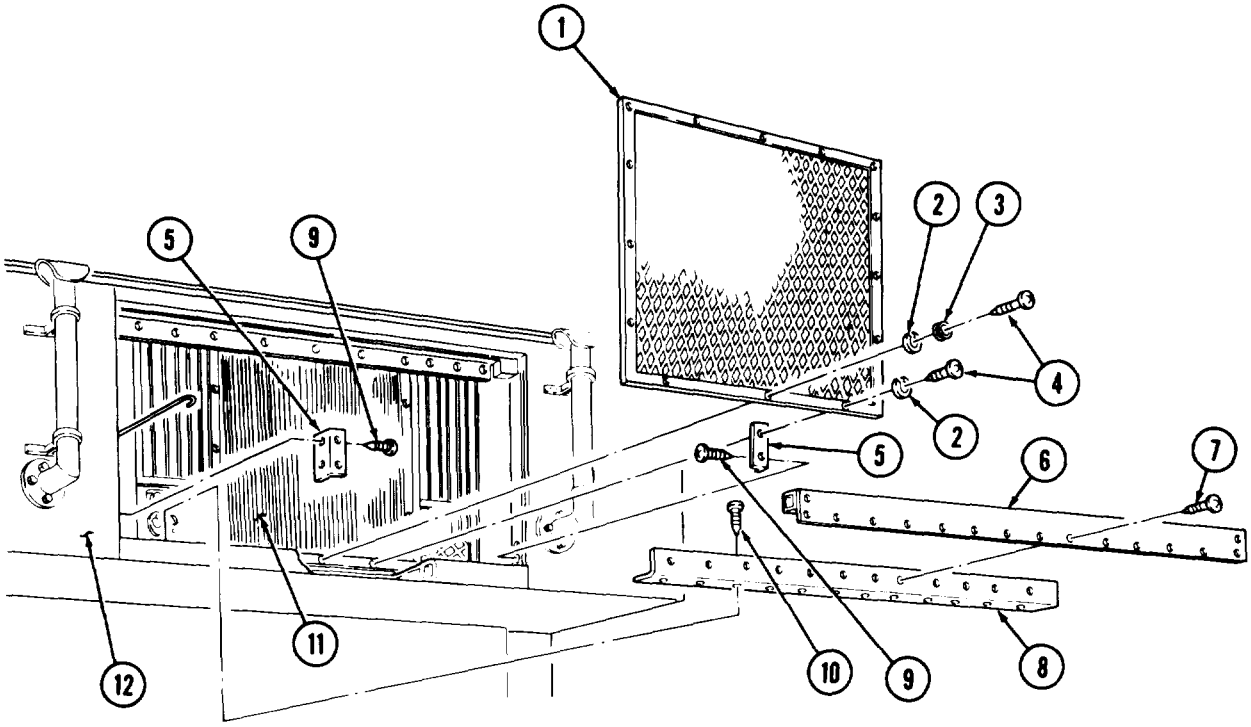

15-49. AIR CONDITIONER REPLACEMENT (Contd)

5. Remove sixteen screws (1) and top enclosure (2) from bonnet (9) and air conditioner (8).
6. Remove seven screws (6), ten screws (3), bottom enclosure (5), and left enclosure (4) from bonnet (9) and air conditioner (8).
7. Remove four screws (14), plate (13), and bellows (12) from right enclosure (11).
8. Remove cotter pin (16) and door rod (10) from swing arm (15). Discard cotter pin (16).
9. Remove ten screws (7) and right enclosure (11) from bonnet (9) and air conditioner (8).
10. Disconnect cable (24) from air conditioner (8).
11. Remove screw (26), lockwasher (27), washer (28), ground wire (29), and lockwasher (25) from air conditioner (8). Discard lockwashers (27) and (25).
12. Remove nut (33), lockwashers (32), washer (31), screw (23), ground wire (29), and lockwasher (30) from mounting plate (19) and bonnet floor (35). Discard lockwashers (32) and (30).
13. Remove five nuts (34), lockwashers (36), washers (37), and screws (22) from mounting plate (19) and bonnet floor (35). Discard lockwashers (36).
14. Remove six screws (21) and lockwashers (38) from mounting plate (18) and bonnet floor (35). Discard lockwashers (38).
15. Attach chain to lifting device and four lifting brackets (17).

WARNING

- All personnel must stand clear during lifting operations. A swinging or shifting load may cause injury to personnel.
- Ensure lifting capacity is greater than weight (450 lb (204 kg)) of air conditioner. Failure to do so may result in injury to personnel or damage to equipment.

NOTE

Assistant will help with step 16.

16. Remove air conditioner (8) from bonnet (9).
17. Remove six screws (20) and mounting plates (18) and (19) from air conditioner (8).

15-49. AIR CONDITIONER REPLACEMENT (Contd)

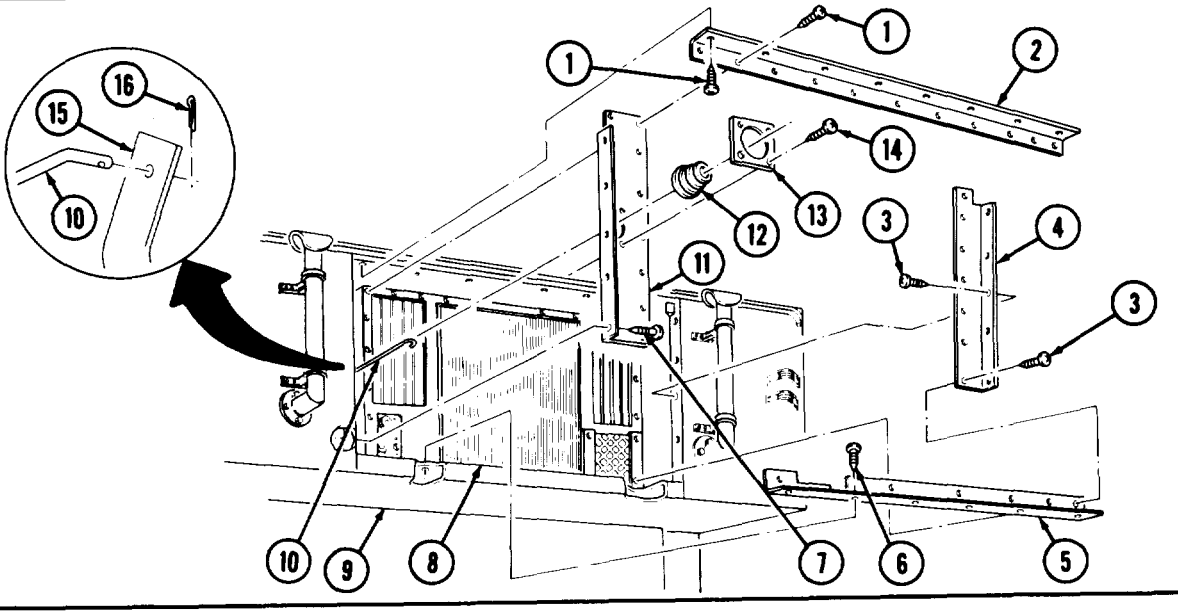

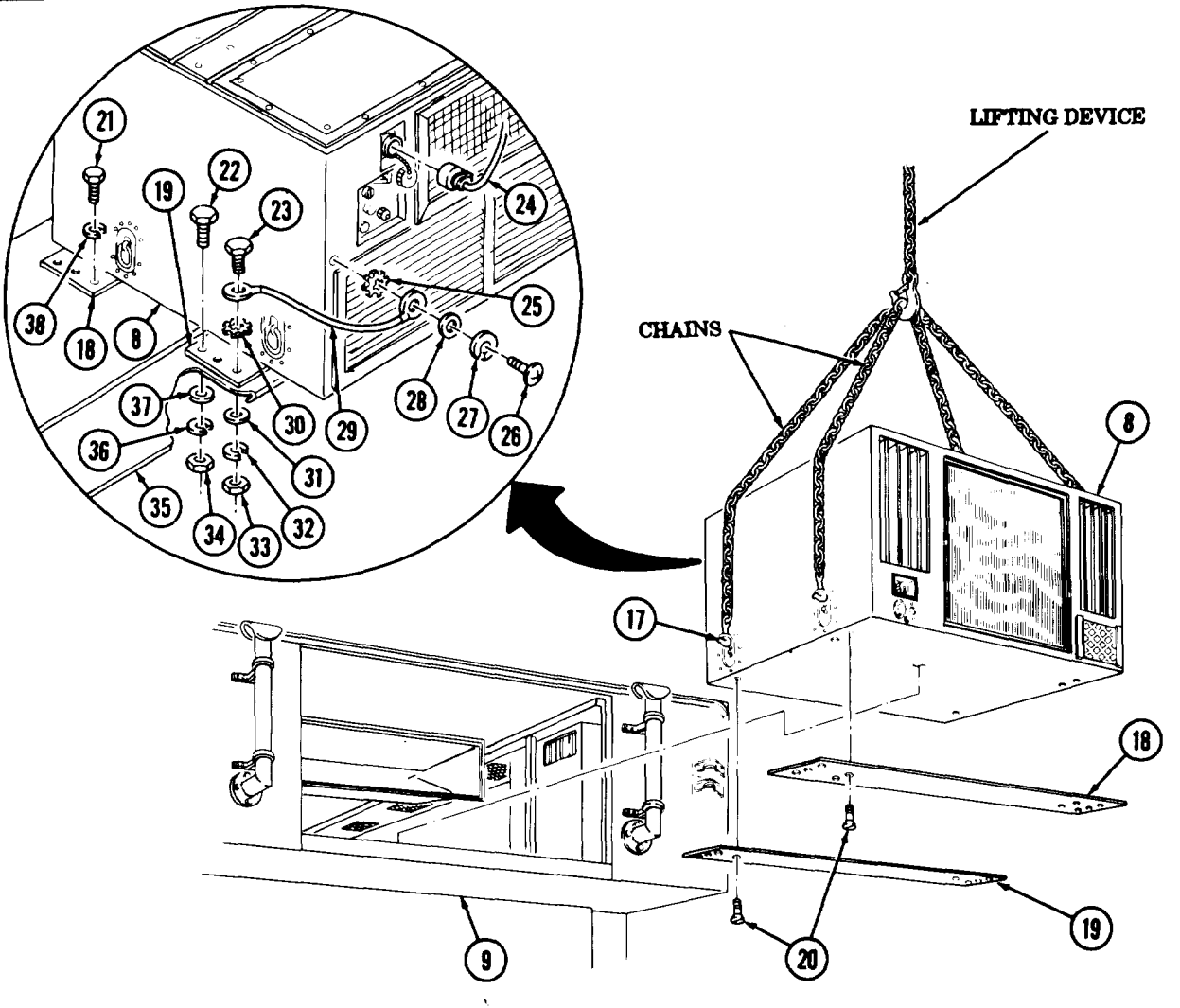

15-49. AIR CONDITIONER REPLACEMENT (Contd)

b. Installation

1. Install mounting plates (2) and (3) on air conditioner (1) with six screws (4).
2. Attach chain to lifting device and four lifting brackets (6).

WARNING

- All personnel must stand clear during lifting operations. A swinging or shifting load may cause injury to personnel.
- Ensure lifting capacity is greater than weight (450 lb (204 kg)) of air conditioner. Failure to do so may result in injury to personnel or damage to equipment.

NOTE

Assistant will help with step 3.

3. Position air conditioner (1) in bonnet (5).
4. Secure mounting plate (2) to bonnet floor (21) with six new lockwashers (24) and screws (7).
5. Secure mounting plate (3) to bonnet floor (21) with five screws (8), washers (23), new lockwashers (22), and nuts (20).
6. Install ground wire (15) on mounting plate (3) and bonnet floor (21) with new lockwashers (16), screw (9), washer (17), new lockwasher (18), and nut (19).
7. Install ground wire (15) on air conditioner (1) with new lockwashers (11), washer (14), new lockwasher (13), and screw (12).
8. Connect cable (10) to air conditioner (1).
9. Remove lifting device from chains and remove chains from four lifting brackets (6).
10. Install left enclosure (28) and bottom enclosure (29) on bonnet (5) and air conditioner (1) with ten screws (27) and seven screws (30).
11. Install bellows (34) and plate (35) on right enclosure (33) with four screws (36).
12. Install door rod (32) on swing arm (37) with new cotter pin (38).
13. Install right enclosure (33) on bonnet (5) and air conditioner (1) with ten screws (31).
14. Install top enclosure (26) on bonnet (5) and air conditioner (1) with sixteen screws (25).

15-49. AIR CONDITIONER REPLACEMENT (Contd)

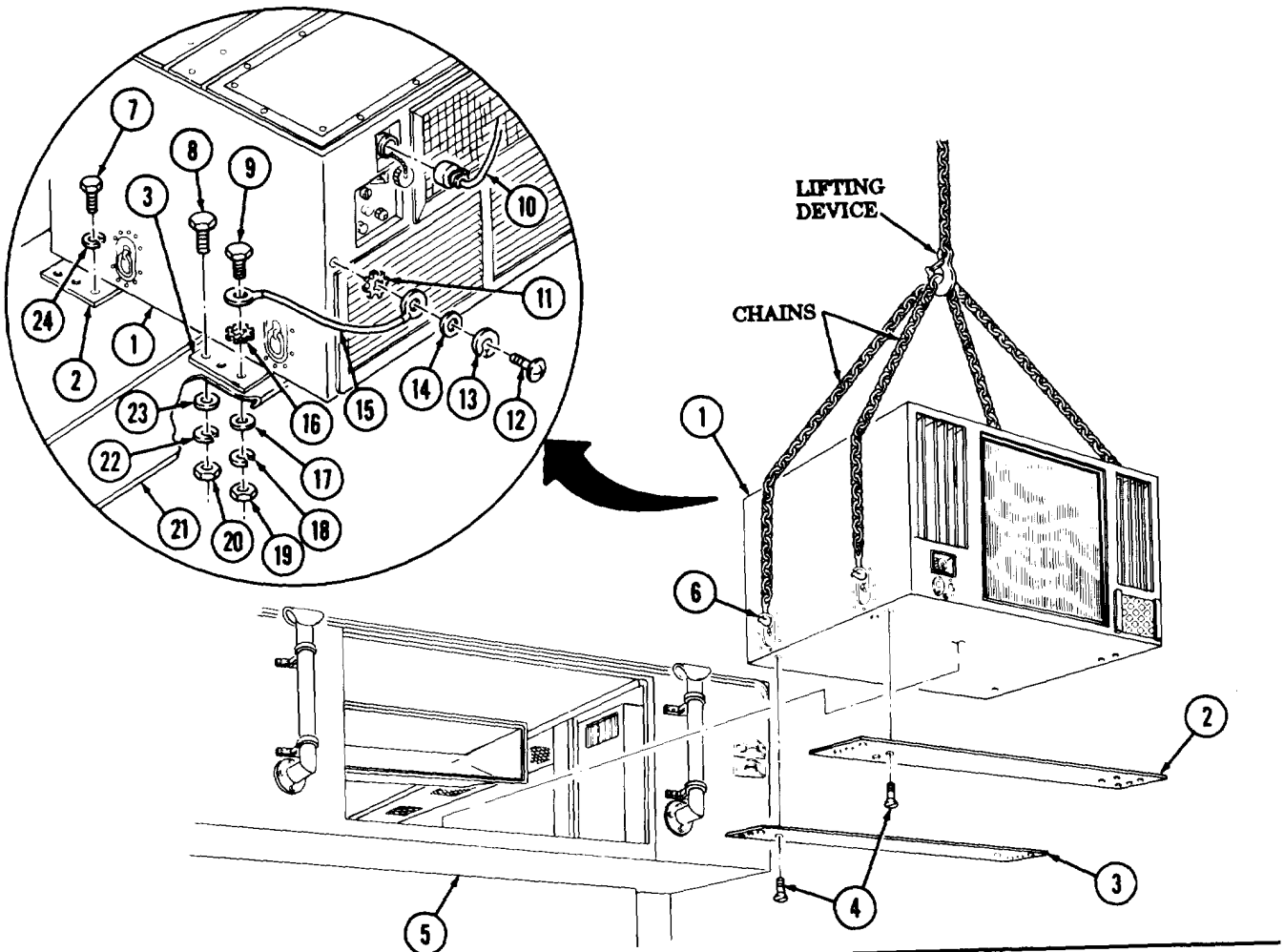

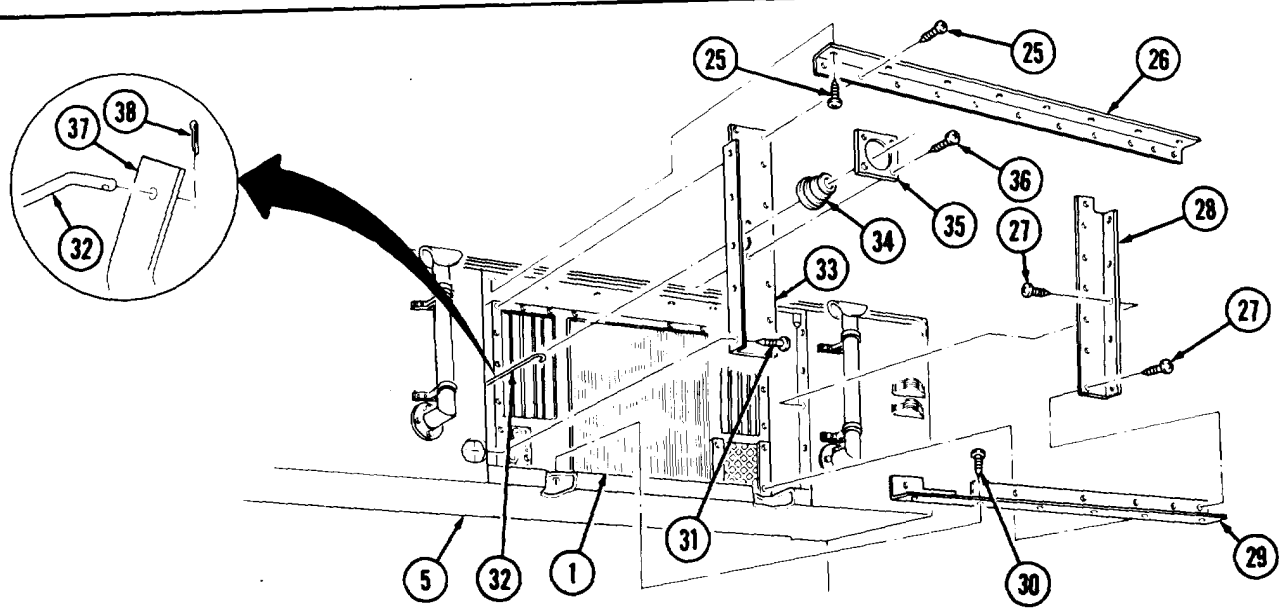

15-49. AIR CONDITIONER REPLACEMENT (Contd)

NOTE

Screw quantity for steps 15, 16, and 18 may differ from vehicle to vehicle, Install screws as recorded.

15. Install condenser guard (1) on air conditioner (11) with fourteen new lockwashers (2), snap (3), and fourteen screws (4).
16. Install two mounting angles (5) on bonnet (12) with four screws (9).
17. Install lower panel mounting angle (8) on bonnet (12) with twelve screws (10).
18. Install lower angle bracket (6) on bonnet (12), mounting angle (8), and two mounting angles (5) with sixteen screws (7).

15-49. AIR CONDITIONER REPLACEMENT (Contd)

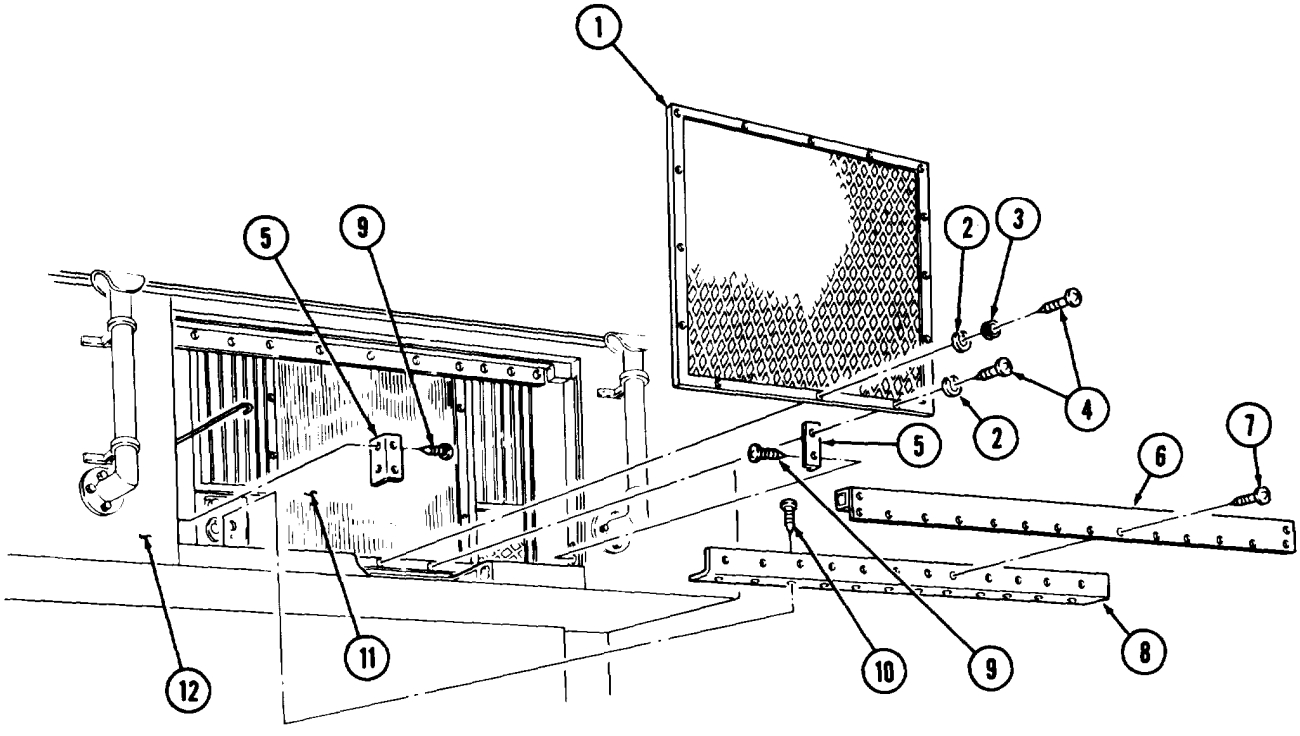

FOLLOW-ON TASKS:
- Install bonnet door (para. 15-48).
- Install air conditioner drain tube (TM 9-2320-260-20).
- Raise windshield and install cab top (TM 9-2320-260-10).
- Wise companion seat (TM 9-2320-260-10).
- Connect battery ground cable (TM 9-2320-260-20).
- Connect external power source (TM 9-2320-260-10).

15-50. LIFTGATE REPLACEMENT (M820A2)

THIS TASK COVERS:

a. Removal

b. Installation

INITIAL SETUP

APPLICABLE MODELS

M820A2

TOOLS

General mechanic's tool kit (Appendix B, Item 1)
Hydraulic jack

MATERIALS/PARTS

Cap and plug set (Appendix C, Item 6)
Antiseize tape (Appendix C, Item 50)

REFERENCES (TM)

LO 9-2320-260-12
TM 9-2320-260-10
TM 9-2320-260-20
TM 9-2320-260-34P-2

EQUIPMENT CONDITION

- Hydraulic oil reservoir drained (LO 9-2320-260-12).
- Van body ladders removed (TM 9-2320-260-10).
- Liftgate platform opened but not lowered (TM 9-2320-260-10).
- Liftgate platform controls removed (TM 9-2320-260-20).
- Liftgate control valve removed (para. 15-58).

GENERAL SAFETY INSTRUCTIONS

- All personnel must stand clear during lifting operations.
- Ensure lifting capacity is greater than weight of liftgate.

a. Removal

CAUTION

- Clean area around hoses and lines before removal to prevent entry of dirt. Damage will occur if dirt or dust enters system.
- Cap or plug all openings immediately after disconnecting lines and hoses to prevent contamination.

NOTE

- Tag all hydraulic lines and fittings for installation.
- Have drainage container ready to catch oil.

1. Remove hydraulic hoses (12) and (13) from two elbows (6).
2. Remove two elbows (6) from closing cylinder (5).
3. Remove hydraulic hoses (11) and (14) from adapter (10) and restrictor (22).
4. Remove adapter (10), elbow (9), nipple (8), and restrictor (22) from cylinder (4).
5. Remove hydraulic hoses (15) and (16) from elbows (20).
6. Remove check valve (19) and two connectors (18) from closing cylinder (17).
7. Center hydraulic jack under liftgate (1) and raise in place.
8. Remove twelve nuts (3) and screws (7) from main frame (21) and vehicle frame (2).

WARNING

- All personnel must stand clear during lifting operations. A swinging or shifting load may cause injury to personnel.
- Ensure lifting capacity is greater than weight (500 lb (227 kg)) of liftgate. Failure to do so may result in injury to personnel or damage to equipment.

15-50. LIFTGATE REPLACEMENT (M820A2) (Contd)

NOTE

Three assistants will help with steps 9 and 10.

9. While steadying liftgate (1) by platform, remove liftgate (1) from vehicle frame (2).
10. Remove liftgate (1) from hydraulic jack.

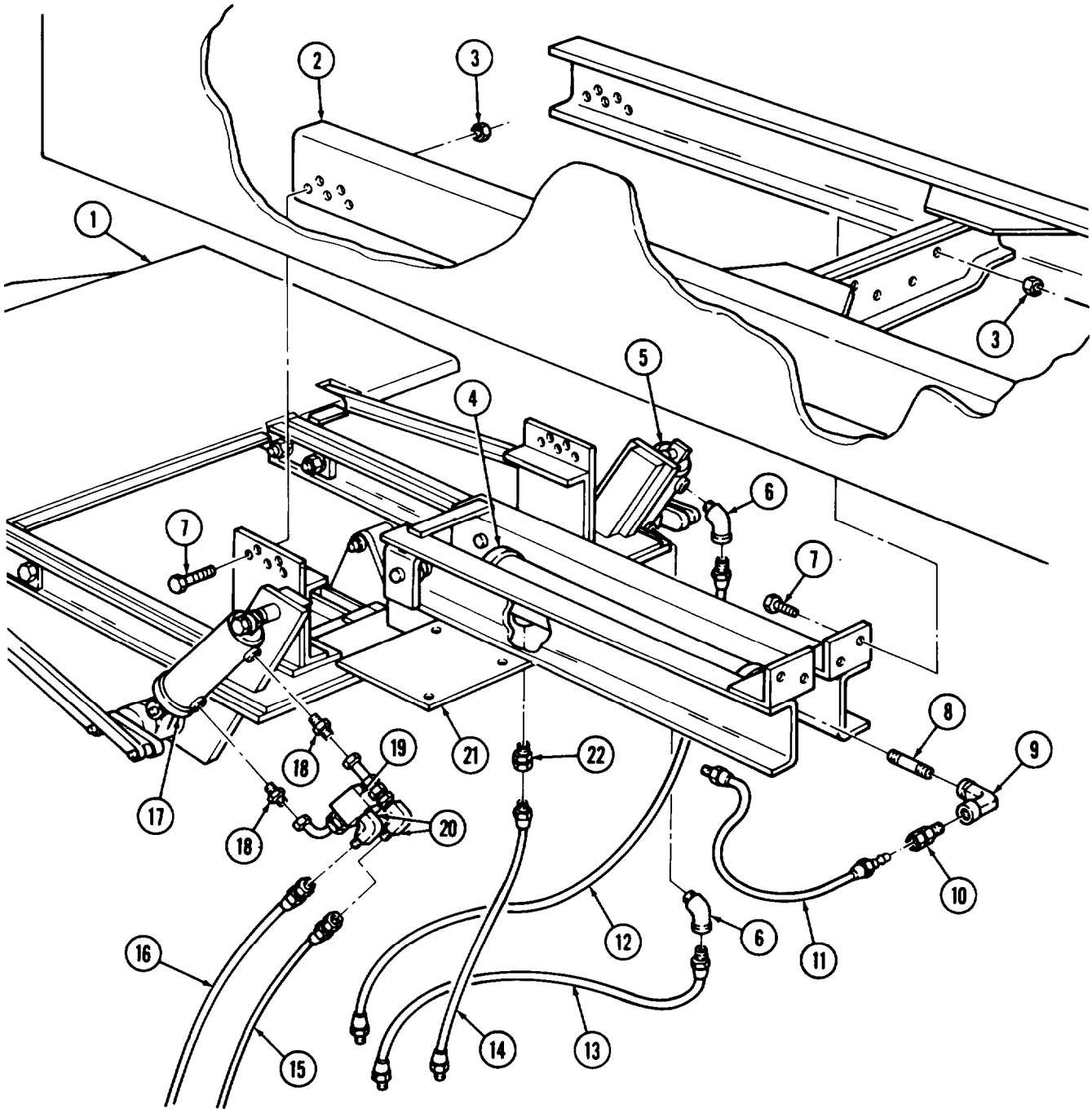

15-50. LIFTGATE REPLACEMENT (M820A2) (Contd)

b. Installation

WARNING

- All personnel must stand clear during lifting operations. A swinging or shifting load may cause injury to personnel.
- Ensure lifting capacity is greater than weight (500 lb (227 kg)) of liftgate. Failure to do so may result in injury to personnel or damage to equipment.

NOTE

Three assistants will help with steps 1 and 2.

1. Center liftgate (1) on hydraulic jack.
2. While steadying liftgate (1) by platform, raise liftgate (1) in place.
3. Install main frame (21) on vehicle frame (2) with twelve screws (7) and nuts (3).
4. Remove hydraulic jack from liftgate (1).
5. Wrap male threads of two connectors (18), elbows (20), elbows (6), restrictor (22), nipple (8), adapter (10), and hydraulic hoses (11), (12), (13), and (14) with antiseize tape.
6. Install two connectors (18) and check valve (19) on closing cylinder (17).
7. Install hydraulic hoses (15) and (16) on elbows (20).
8. Install restrictor (22), nipple (8), elbow (9), and adapter (10) on closing cylinder (4).
9. Install hydraulic hoses (11) and (14) on restrictor (22) and adapter (10).
10. Install two elbows (6) on closing cylinder (5).
11. Install hydraulic hoses (12) and (13) on two elbows (6).

15-50. LIFTGATE REPLACEMENT (M820A2) (Contd)

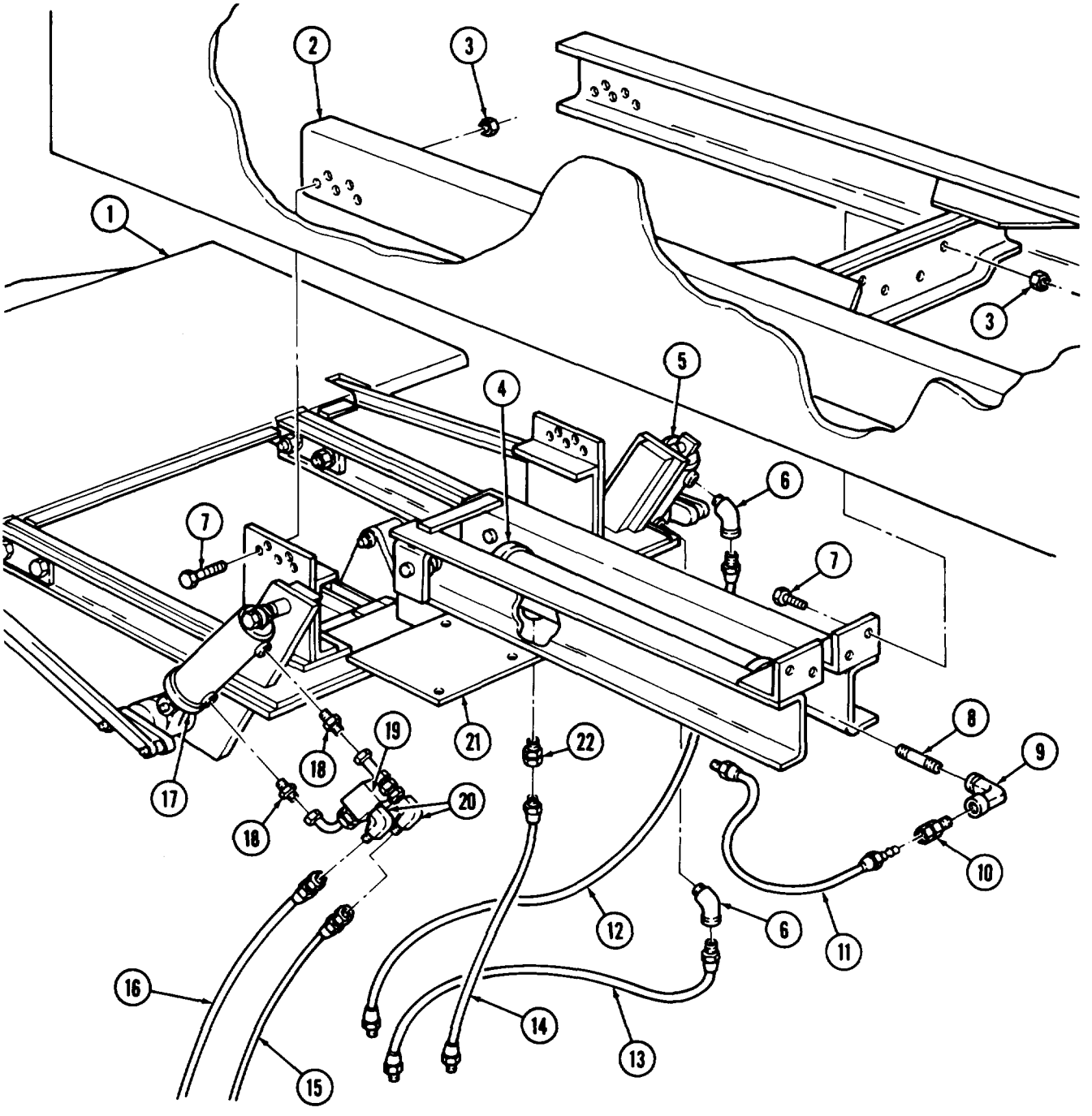

FOLLOW-ON TASKS:
- Install liftgate control valve (para. 15-58).
- Install liftgate platform controls (TM 9-2320-260-20).
- Grease all lubrication fittings (LO 9-2320-260-12).
- Lower and raise liftgate (TM 9-2320-260-10), and check for proper operation.
- Raise and lock liftgate platform (TM 9-2320-260-10).
- Fill hydraulic oil reservoir (LO 9-2320-260-12).
- Install van body ladders (TM 9-2320-260-10).

15-51. LIFTGATE PLATFORM AND HINGE PLATE MAINTENANCE (M820A2)

THIS TASK COVERS:

a. Removal
b. Cleaning and Inspection
c. Repair
d. Adjustment
e. Installation

INITIAL SETUP

APPLICABLE MODELS
M820A2

SPECIAL TOOLS
General mechanic's tool kit (Appendix B, Item 1)
Inside micrometer (Appendix B, Item 9)
Outside micrometer (Appendix B, Item 8)
Torque wrench, 1/2-in. dr. (Appendix B, Item 3)

MATERIALS/PARTS
Twelve lockwashers (Appendix D, Item 226)
Eight cotter pins (Appendix D, Item 33)
Shims (Appendix D, Item 499)
Lubricating oil (Appendix C, Item 21)

REFERENCES (TM)
LO 9-2320-260-12
TM 9-237
TM 9-2320-260-10
TM 9-2320-260-34P-2

EQUIPMENT CONDITION
- Parking brake set (TM 9-2320-260-10).
- Van body ladders removed (TM 9-2320-260-10).
- Platform opened but not lowered (TM 9-2320-260-10).
- Van doors opened (TM 9-2320-260-10).

GENERAL SAFETY INSTRUCTIONS
Platform is heavy and bulky. Use assistants to remove and install platform.

a. Removal

1. Remove four screws (4), lockwashers (3), two hinge leaves (2), and bar nuts (6) from van floor (5) and hinge plate (1). Discard lockwashers (3).

NOTE

Assistant will help with steps 2 and 3.

2. Remove hinge plate (1) from van floor (5).
3. Lift platform (9) and position support under outer edge to take weight off of radius arms (20).
4. Remove eight cotter pins (15), two connecting links (21), four radius pins (18), and radius rods (20) from two clutches (22) and platform supports (17). Discard cotter pins (15).
5. Remove eight lubrication fittings (19) from four radius pins (18) and radius rods (20).

NOTE

Tag and measure shims for installation,

6. Remove eight nuts (14), lockwashers (13), screws (12), two bearing caps (11), and shims (10) from two bearing arms (7) and platform journals (16). Discard lockwashers (13).
7. Remove two lubrication fittings (8) and bearing arms (7).

WARNING

Platform is heavy and bulky; handle with care. Failure to do so may result in injury to personnel or damage to equipment.

NOTE

Four assistants will help with step 8.

8. Remove platform (9) from two bearing arms (7) and support.

15-51. LIFTGATE PLATFORM AND HINGE PLATE MAINTENANCE (M820A2) (Contd)

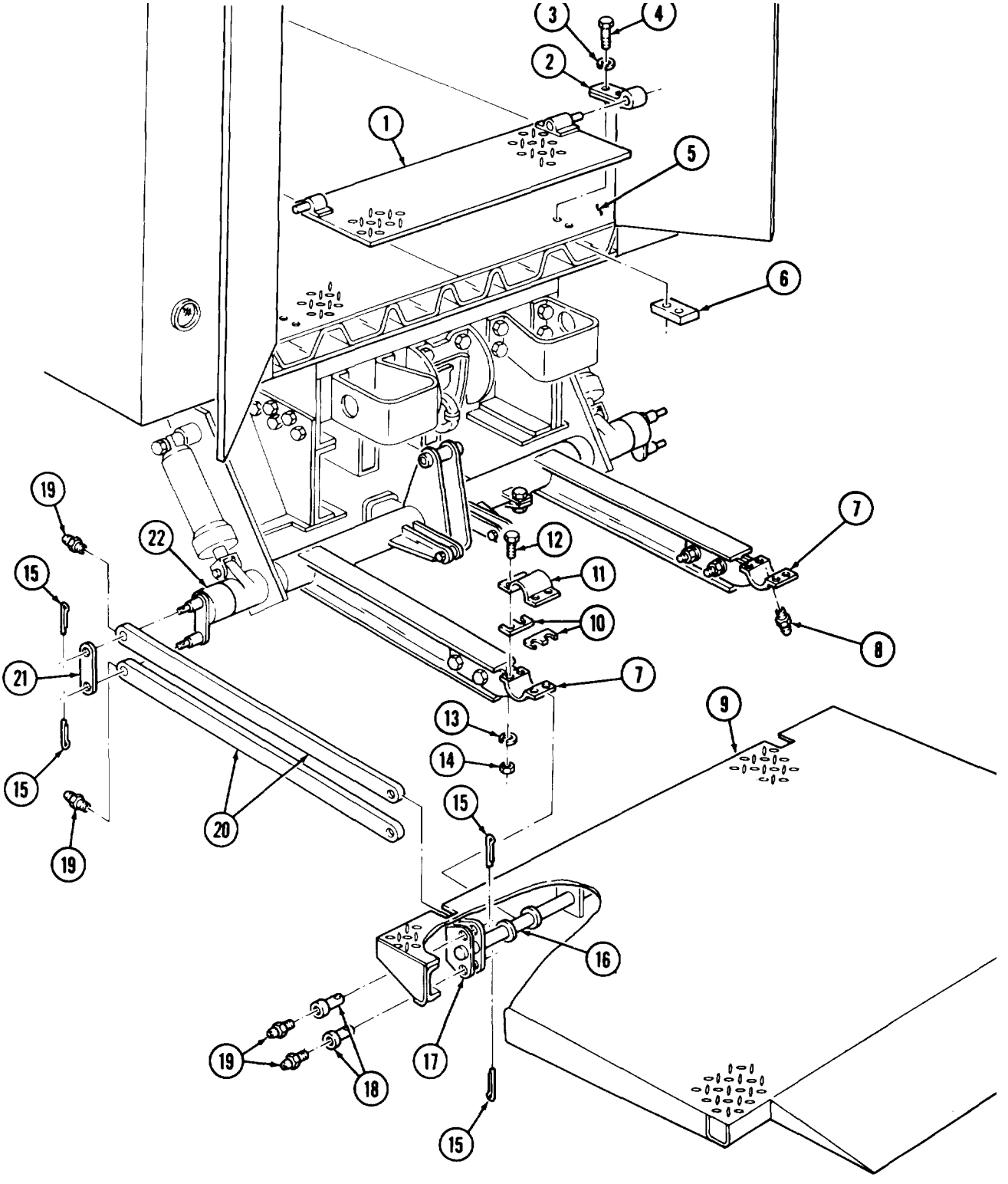

15-51. LIFTGATE PLATFORM AND HINGE PLATE MAINTENANCE (M820A2) (Contd)

b. Cleaning and Inspection

1. For general cleaning instructions, refer to para. 2-8.
2. For general inspection instructions, refer to para. 2-9.

c. Repair

1. Straighten and aline platform (9), two platform supports (17), connecting links (21), four radius rods (18), hinge plate (1), and two hinge leaves (2) (TM 9-237).
2. Weld platform (9), two platform journals (16), platform supports (17), connecting links (21), four radius rods (18), hinge plate (1), and two hinge leaves (2) if cracked or weld seams are split (TM 9-237).

d. Adjustment

1. Using outside micrometer, measure outer diameter of two platform journals (16) and note measurements separately.
2. Install shims (10) and two bearing caps (11) on bearing arms (7) with eight screws (12) and nuts (14). Tighten nuts (6) 75-85 lb-ft (102-115 N·m).
3. Using inside micrometer, measure inner diameter of bearing surface between bearing arms (7) and bearing caps (11). Note measurements separately.

NOTE

Clearance between platform journals and bearing surfaces must be 0.010-0.015 in. (0.25 mm-0.38 mm).

4. Subtract measurement from step 3 from measurement from step 1 to obtain journal clearance.

NOTE

Tag shims for installation.

5. Remove eight nuts (14), screws (12), shims (10), and two bearing caps (11) from bearing arms (7).
6. If clearance is not within limits, add or remove shims (10) by performing steps 2 through 5 until journal clearance is within limits.

e. Installation

1. Install two lubrication fittings (8) on bearing arms (7).

WARNING

Platform is heavy and bulky; handle with care. Failure to do so may result in injury to personnel or damage to equipment.

NOTE

- Four assistants will help with steps 2 and 3.
- Coat all bearing surfaces with lubricating oil during installation.

2. Install platform (9) on two bearing arms (7) and position support under platform outer edge.
3. Install shims (10) and two bearing caps (11) on bearing arms (7) and platform journals (16) with eight screws (12), new lockwashers (13), and nuts (14). Tighten nuts (14) 75-85 lb-ft (102-115 N·m).
4. Install eight lubrication fittings (19) on four radius pins (18) and radius rods (20).
5. Install four radius rods (20) on two platform supports (17) and clutches (22) with four radius pins (18), two connecting links (21), and eight new cotter pins (15).

15-51. LIFTGATE PLATFORM AND HINGE PLATE MAINTENANCE (M820A2) (Contd)

NOTE

Assistant will help with steps 6 and 7.

6. Lift platform outer edge and remove support.
7. Install hinge plate (1) on van floor (5) with two hinge leaves (2), bar nuts (6), four new lockwashers (3), and screws (4). Tighten screws (4) 49-55 lb-ft (66-75 N·m).

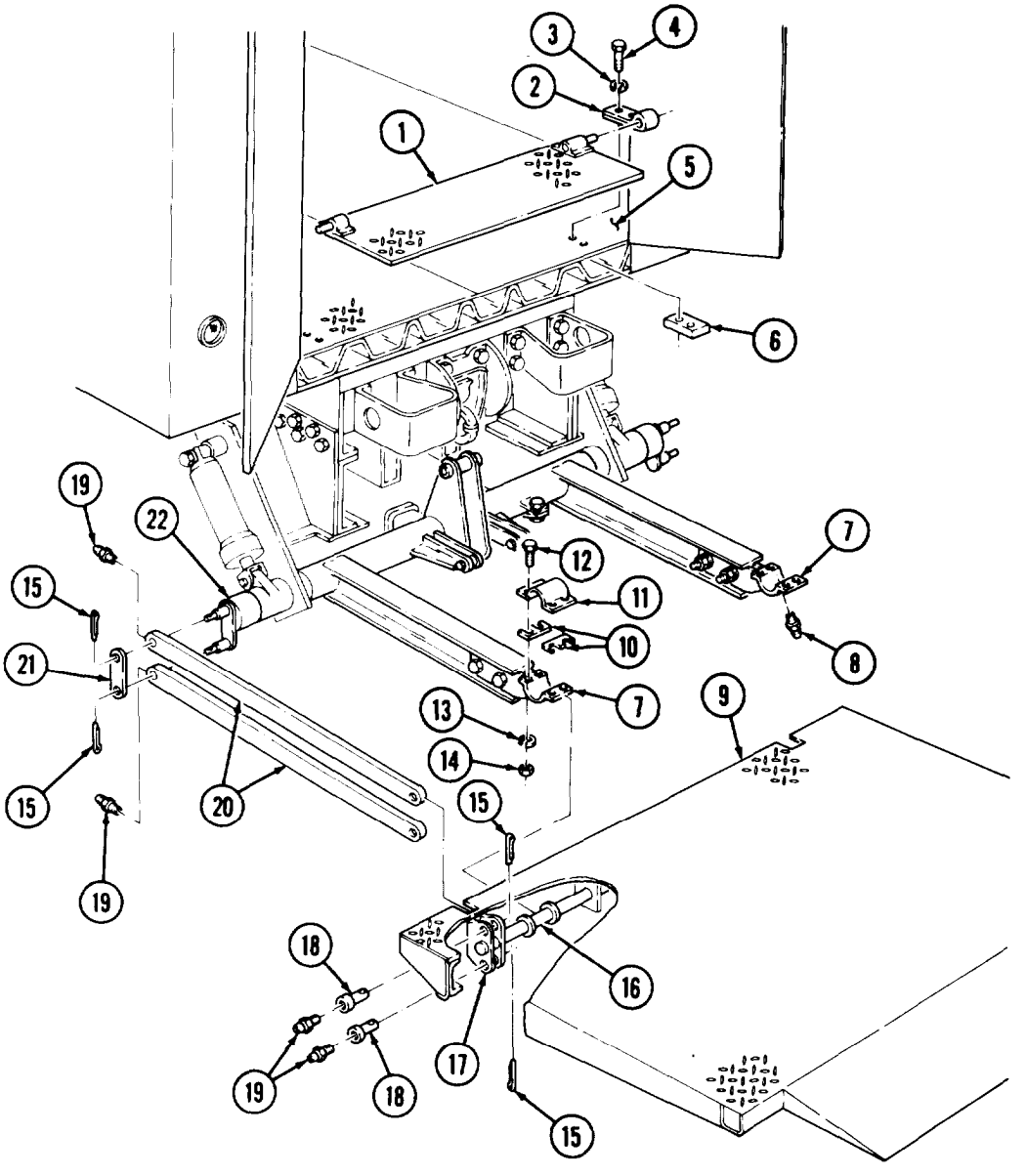

FOLLOW-ON TASKS:
- Grease all lubrication fittings (LO 9-2320-260-12).
- Close van doors (TM 9-2320-260-10).
- Close platform (TM 9-2320-260-10).
- Install van body ladders (TM 9-2320-260-10).

15-52. LIFTGATE LIFT FRAME MAINTENANCE (M820A2)

THIS TASK COVERS:

a. Removal
b. Disassembly
c. Cleaning and Inspection
d. Assembly
e. Installation

INITIAL SETUP

APPLICABLE MODELS
A11

TOOLS
General mechanic's tool kit (Appendix B, Item 1)

MATERIALS/PARTS
Four lockwashers (Appendix D, Item 228)
Two pins (Appendix D, Item 318)

REFERENCES (TM)
LO 9-2320-260-12
TM 9-2320-260-10
TM 9-2320-260-34P-2

EQUIPMENT CONDITION
- Parking brake set (TM 9-2320-260-10).
- Liftgate platform and hinge plate removed (para. 15-51).
- Liftgate closing cylinders removed (para. 15-60).
- Liftgate clutches removed (para. 15-54).

a. Removal

1. Remove two pins (4) from straight pin (14). Discard pins (4).

NOTE

Two assistants will help with steps 2 and 3.

2. Manually raise lift frame (8) to take weight off lifting cylinder rod (2).
3. Remove straight pin (14) from lift frame (8) and lifting cylinder rod (2).
4. *Remove* shouldered shaft (3) and lift frame (8) from main frame (1).

b. Disassembly

1. Remove two sleeve bushings (7) from lift frame (8).
2. Remove two lubrication fittings (5) from lift frame (8).
3. Remove four nuts (10), lockwashers (11), screws (13), and two bearings arms (12) from lift frame (8). Discard lockwashers (11).
4. Remove nut (9) and liftgate kickout screw (6) from lift frame (8).

c. Cleaning and Inspection

1. For general cleaning instructions, refer to para. 2-8.
2. For general inspection instructions, refer to para. 2-9.

d. Assembly

1. Install liftgate kickout screw (6) in lift frame (8) with nut (9).
2. Install two bearing arms (12) on lift frame (8) with four screws (13), new lockwashers (11), and nuts (10).
3. Install two sleeve bushings (7) on lift frame (8).
4. Install two lubrication fittings (5) on lift frame (8).

15-52. LIFTGATE LIFT FRAME MAINTENANCE (M820A2) (Contd)

e. Installation

NOTE

Two assistants will help with steps 1 through 3.

1. Aline lift frame (8) on main frame (l), and install shoulder shaft (3) and lift frame (8) on main frame (1).
2. Manually raise lift frame (8) and aline with lifting cylinder rod (2).
3. Install lifting cylinder rod (2) on lift frame (8) with straight pin (14) and two new pins (4).

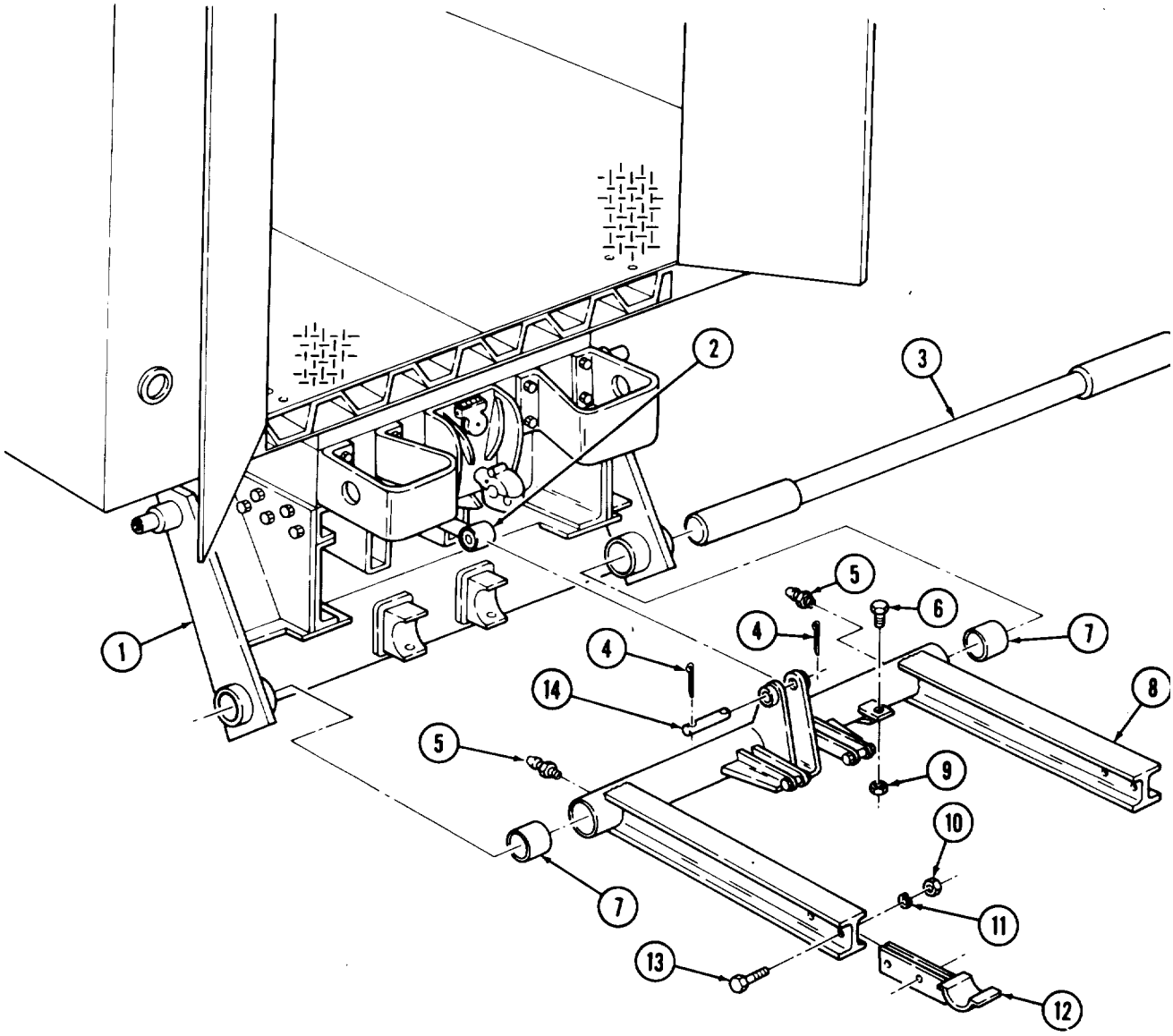

FOLLOW-ON TASKS:
- Install liftgate platform and hinge plate (para. 15-51).
- Install liftgate closing cylinders (para. 15-60).
- Install liftgate clutches (para. 15-54).
- Grease lubrication fittings (LO 9-2320-260-12).

15-53. LIFTGATE MAIN FRAME MAINTENANCE (M820A2)

THIS TASK COVERS:

a. Removal
b. Cleaning and Inspection
c. Installation

INITIAL SETUP

APPLICABLE MODELS
M820A2

TOOLS
General mechanic's tool kit (Appendix B, Item 1)
Hydraulic jack

REFERENCES (TM)
TM 9-2320-260-10
TM 9-2320-260-34P-2

EQUIPMENT CONDITION
- Parking brake set (TM 9-2320-260-10).
- Liftgate lift frame removed (para. 15-52).
- Liftgate cylinder removed (para. 15-59).
- Liftgate control valve removed (para. 15-58).
- Liftgate control linkage removed (para. 15-55).

GENERAL SAFETY INSTRUCTIONS
- All personnel must stand clear during lifting operations.
- Ensure lifting capacity is greater than weight of liftgate main frame.

a. Removal

1. Remove four lubrication fittings (4) from main frame (6).
2. Center hydraulic jack under main frame (6) and raise in place.
3. Remove twelve nuts (2) and screws (3) from main frame (6) and vehicle frame (1).

WARNING

- All personnel must stand clear during lifting operations. A swinging or shifting load may cause injury to personnel.
- Ensure lifting capacity is greater than weight of liftgate main frame. Failure to do so may result in injury to personnel or damage to equipment.

NOTE

Two assistants will help with steps 4 and 5.

4. While steadying main frame (6) by control levers (5), remove main frame (6) from vehicle frame (1).
5. Remove main frame (6) from hydraulic jack.

b. Cleaning and Inspection

1. For general cleaning instructions, refer to para. 2-8.
2. For general inspection instructions, refer to para. 2-9.

c. Installation

WARNING

- All personnel must stand clear during lifting operations. A swinging or shifting load may cause injury to personnel.
- Ensure lifting capacity is greater than weight of liftgate main frame. Failure to do so may result in injury to personnel or damage to equipment.

15-53. LIFTGATE MAIN FRAME MAINTENANCE (M820A2) (Contd)

NOTE

Two assistants will help with steps 1 and 2.

1. Center main frame (6) on hydraulic jack.
2. While steadying main frame (6) by control levers (5), raise main frame (6) in place.
3. Install main frame (6) on vehicle frame (1) with twelve screws (3) and nuts (2).
4. Remove hydraulic jack from main frame (6).
5. Install four lubrication fittings (4) on main frame (6).

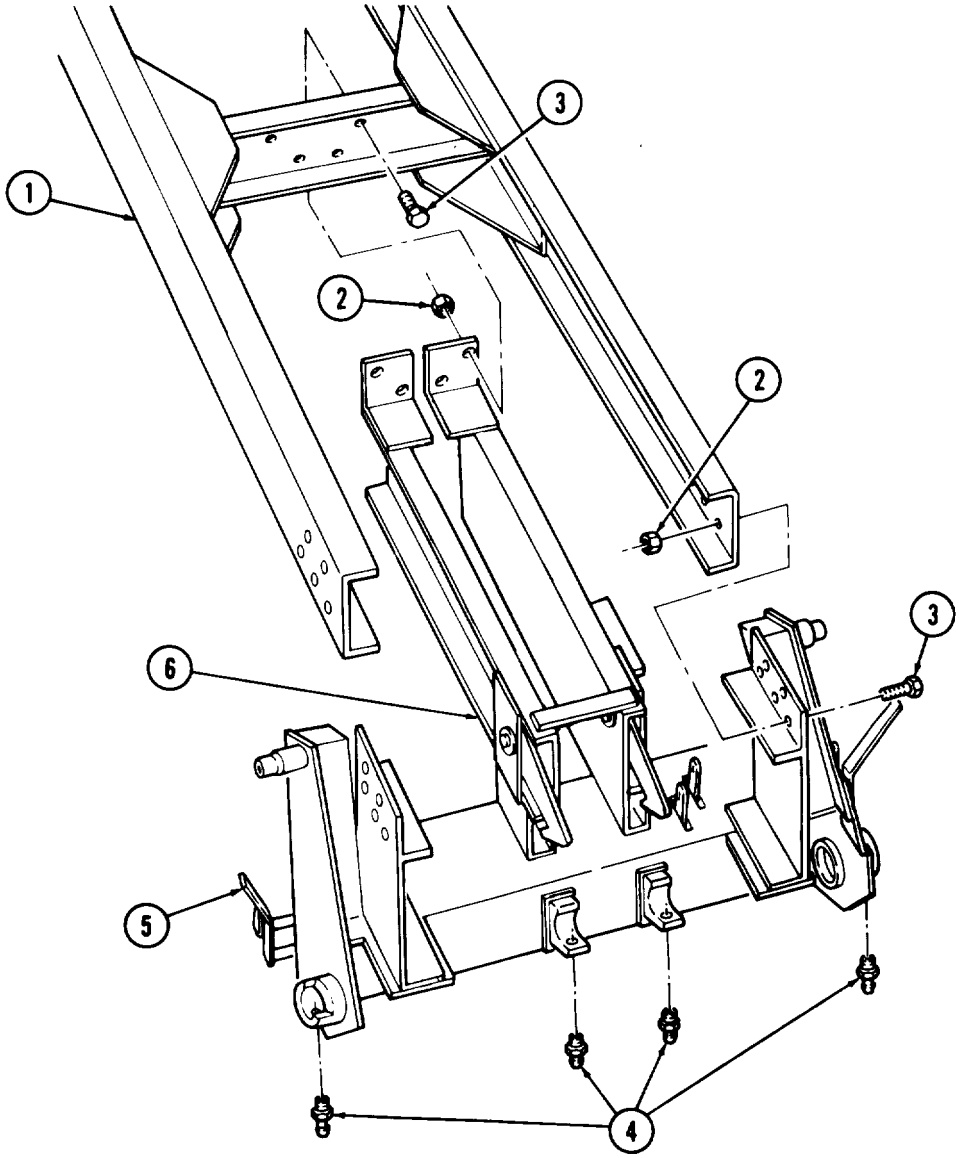

FOLLOW-ON TASKS:
- Install liftgate control linkage (para. 15-55).
- Install liftgate control valve (para. 15-58).
- Install liftgate cylinder (para. 15-59).
- Install liftgate lift frame (para. 15-52).

15-54. LIFTGATE CLUTCHES REPLACEMENT (M820A2)

THIS TASK COVERS:

a. Removal

b. Installation

INITIAL SETUP

APPLICABLE MODELS
M820A2

TOOLS
General mechanic's tool kit (Appendix B, Item 1)

MATERIALS/PARTS
Two lockwashers (Appendix D, Item 230)
Four pins (Appendix D, Item 318)

REFERENCES (TM)
TM 9-2320-260-10
TM 9-2320-260-34P-2

EQUIPMENT CONDITION
- Parking brake set (TM 9-2320-260-10).
- Liftgate platform and hinge removed (para. 15-51).

a. Removal

1. Remove four pins (1) and two pivots (2) from left hand clutch (13), right hand clutch (7), and two closing cylinder rods (9) and (14). Discard pins (1).
2. Remove screw (11), lockwasher (12), and left hand clutch (13) from closing cylinder rod (14) and lift frame shaft (10). Discard lockwasher (12).
3. Remove screw (6), lockwasher (5), two screws (4), nuts (3), and right hand clutch (7) from closing cylinder rod (9) and lift frame shaft (8). Discard lockwasher (5).

b. Installation

1. Install right hand clutch (7) on lift frame shaft (8) with two screws (4), nuts (3), new lockwasher (5), and screw (6).
2. Install left hand clutch (13) on lift frame shaft (10) with new lockwasher (12) and screw (11).
3. Connect left hand clutch (13) and right hand clutch (7) to two closing cylinder rods (14) and (9) with two pivots (2) and four new pins (1).

15-54. LIFTGATE CLUTCHES REPLACEMENT (M820A2) (Contd)

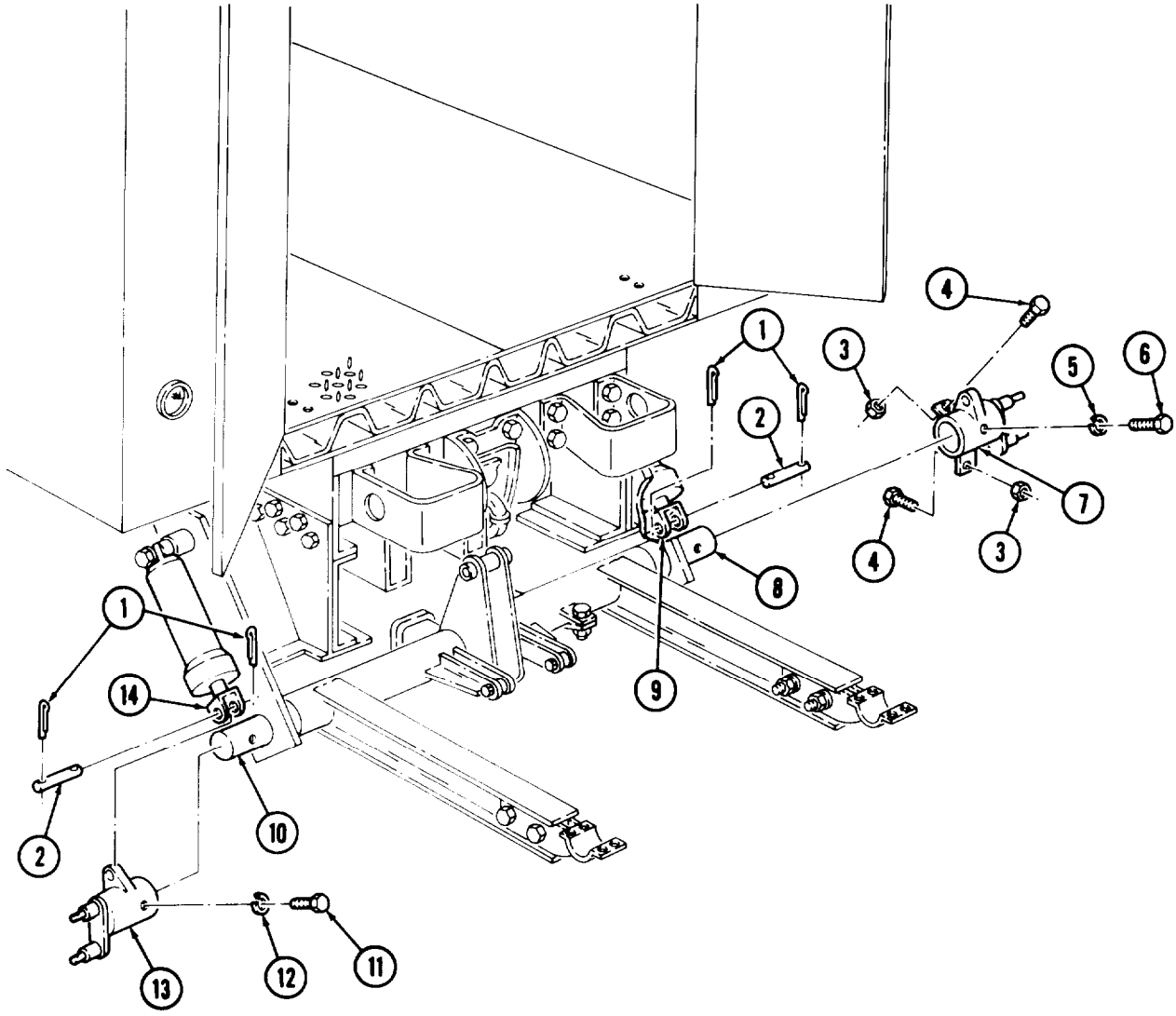

FOLLOW-ON TASK: Install platform and hinge (para. 15-51).

15-55. LIFTGATE CONTROL LINKAGE MAINTENANCE (M820A2)

THIS TASK COVERS:

a. Removal
b. Disassembly
c. Cleaning and Inspection
d. Assembly
e. Installation

INITIAL SETUP

APPLICABLE MODELS
M820A2

TOOLS
General mechanic's tool kit (Appendix B, Item 1)

MATERIALS/PARTS
Seven cotter pins (Appendix D, Item 35)
Lubricating oil (Appendix C, Item 21)

REFERENCES (TM)
LO 9-2320-260-12
TM 9-2320-260-10
TM 9-2320-260-34P-2

EQUIPMENT CONDITION
- Parking brake set (TM 9-2320-260-10).
- Liftgate lowered to ground level (TM 9-2320-260-10).

a. Removal

NOTE

Remove both connector rods from levers and latch hooks.

1. Remove two nuts (9), washer (7), cotter pin (3) and connector rod (6) from lever (8) and latch hook (1). Discard cotter pin (3).

NOTE

Remove both latch hooks from main frame.

2. Remove two snaprings (4), shaft (10), latch hook (1), and two collars (2) from main frame (5).
3. Remove cotter pin (29), pin (16), nut (28), and connector link (15) from control valve (18) and lever (27). Discard cotter pin (29).
4. Remove cotter pin (20), washer (19), cotter pin (17), and connector link (23) from connector rod (12) and lever (26). Discard cotter pins (20) and (17).
5. Remove cotter pin (21), pin (22); and connector rod (12) from control valve (18). Discard cotter pin (21).
6. Remove two cotter pins (11), pin (14), and connector rod (12) from bracket (13). Discard cotter pins (11).

NOTE

Remove both handle grips from levers.

7. Remove handle grip (24) from lever (25).

15-55. LIFTGATE CONTROL LINKAGE MAINTENANCE (M820A2) (Contd)

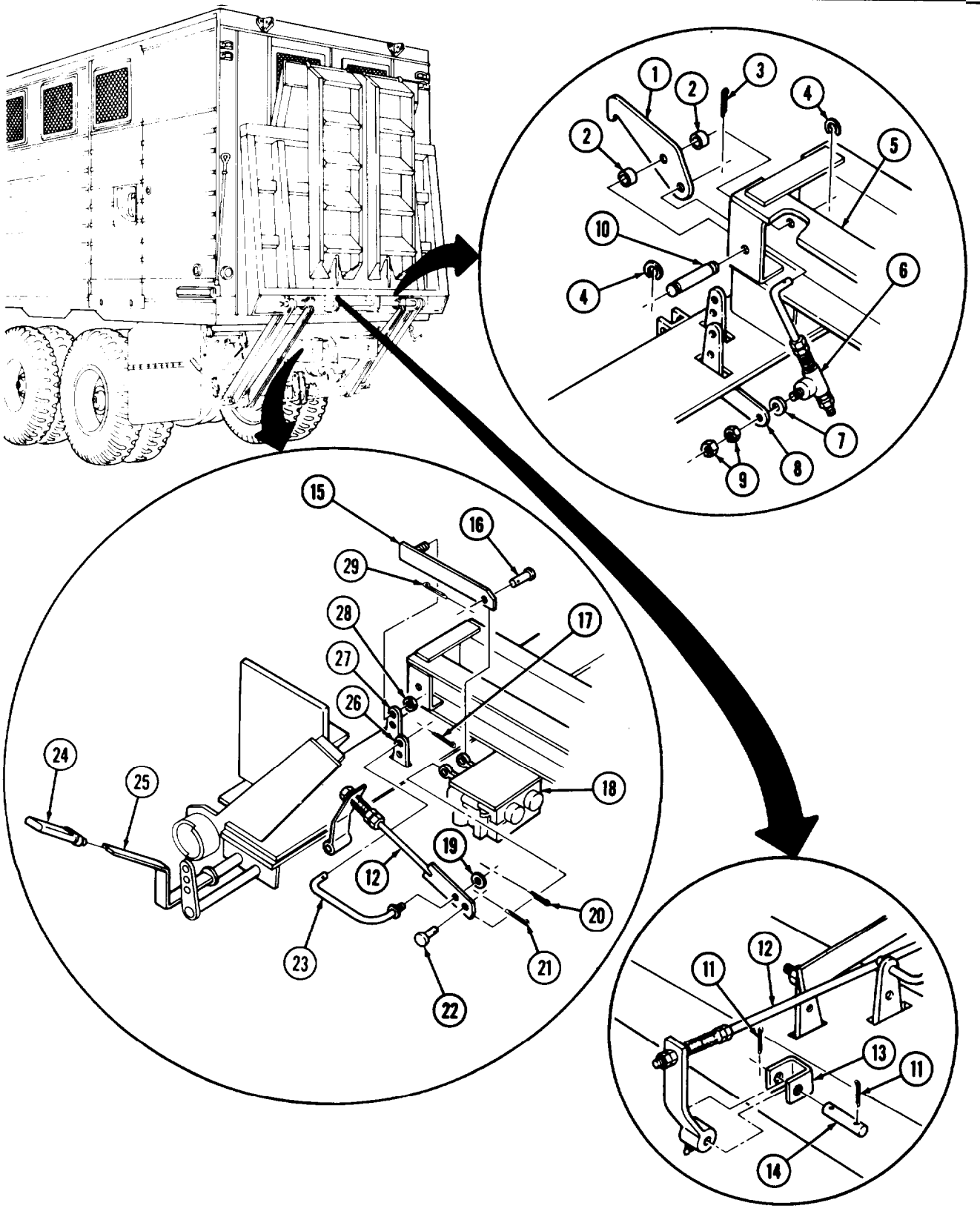

15-55. LIFTGATE CONTROL LINKAGE MAINTENANCE (M820A2) (Contd)

b. Disassembly

1. Remove two nuts (5), lever (10), spring (6), and two nuts (7) from rod (8).
2. Remove lubrication fitting (9) from lever (10).

NOTE

Disassemble both connector rods.

3. Remove two nuts (24), eyebolt (25), spring (23), and two nuts (22) from rod (21).

c. Cleaning and Inspection

1. For general cleaning instructions, refer to para. 2-8.
2. For general inspection instructions, refer to para. 2-9.

d. Assembly

NOTE

- Coat all threads with lubricating oil before assembly.
- Assemble both connector rods.

1. Install two nuts (22), spring (23), eyebolt (25), and two nuts (24) on rod (21).
2. Install two nuts (7), spring (6), lever (10), and two nuts (5) on rod (8).
3. Install lubrication fitting (9) on lever (10).

e. Installation

NOTE

Coat all threads and bearing surfaces with lubricating oil before installation.

1. Install connector rod (2) on bracket (3) with pin (4) and two new cotter pins (1).
2. Install connector rod (2) on control valve eyebolt (34) with pin (38) and new cotter pin (37).

NOTE

Install both handle grips on levers.

3. Install handle grip (40) on lever (41).
4. Install connector link (39) on lever (26) and connector rod (2) with new cotter pin (32), washer (35), and new cotter pin (36).
5. Install connector link (30) on lever (27) and control valve eyebolt (33) with nut (28), pin (31), and new cotter pin (29).

NOTE

Install both latch hooks on main frame.

6. Install latch hook (11) and two collars (12) on main frame (15) with shaft (20) and two snaprings (14).

NOTE

Install both connector rods on latch hooks and levers.

7. Install connector rod (16) on latch hook (11) and lever (18) with new cotter pin (13), washer (17), and two nuts (19).

15-55. LIFTGATE CONTROL LINKAGE MAINTENANCE (M820A2) (Contd)

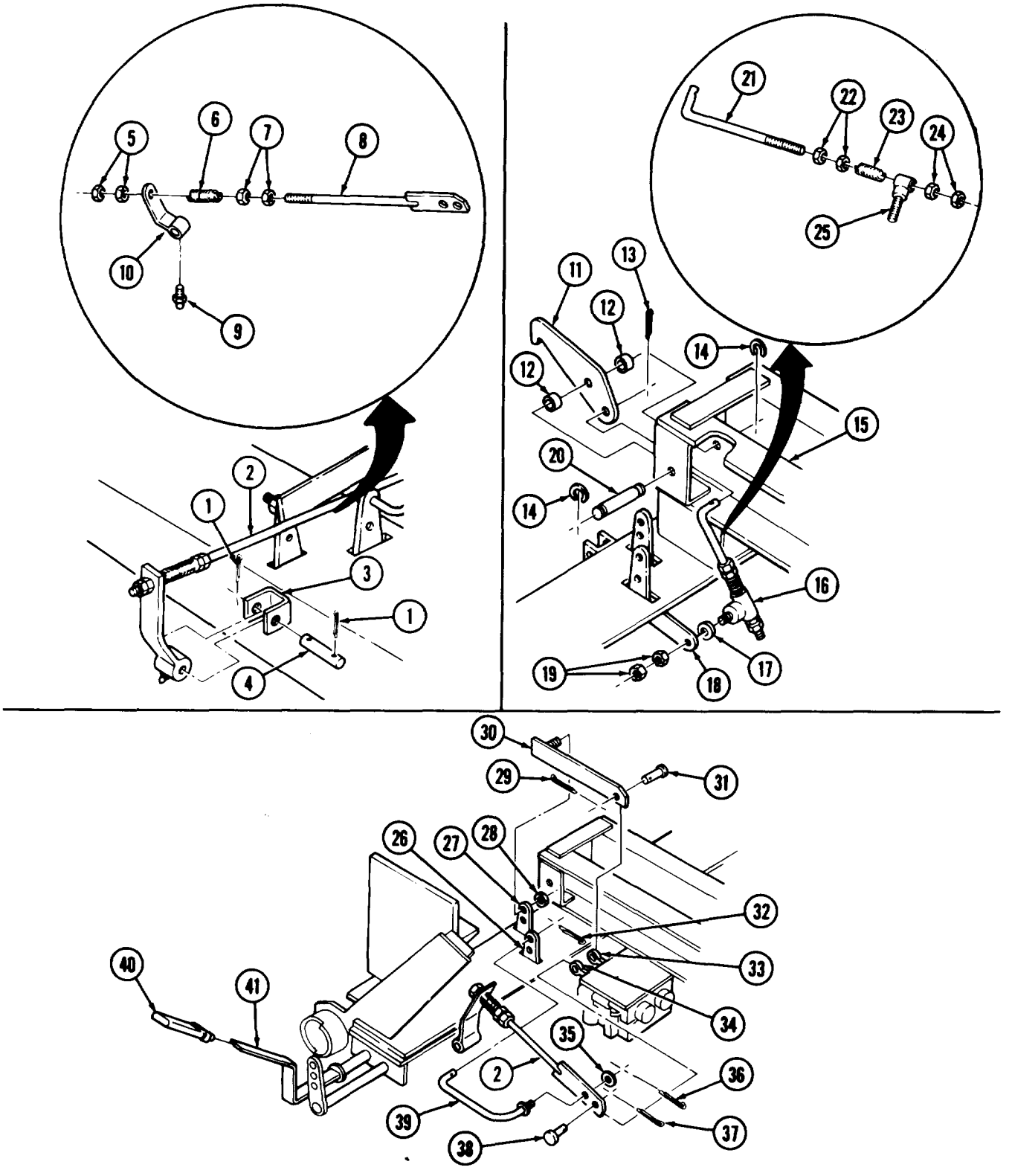

FOLLOW-ON TASKS: • Grease lubrication fittings (L0 9-2320-260-12).
• Lower and raise liftgate and check for proper operation (TM 9-2320-260-10).

15-56. LIFTGATE AUXILIARY PUMP AND BRACKET REPLACEMENT (M820A2)

THIS TASK COVERS:

a. Removal

b. Installation

INITIAL SETUP

APPLICABLE MODELS
M820A2

TOOLS
General mechanic's tool kit
(Appendix B, Item 1)

MATERIALS/PARTS
Four lockwashers (Appendix D, Item 232)
Four lockwashers (Appendix D, Item 234)
Gasket sealant (Appendix C, Item 43)
Cap and plug set (Appendix C, Item 6)
Antiseize tape (Appendix C, Item 50)

REFERENCES (TM)
LO 9-2320-260-12
TM 9-2320-260-10
TM 9-2320-260-20
TM 9-2320-260-34P-2

EQUIPMENT CONDITION
- Battery ground cable disconnected (TM 9-2320-260-20).
- Drain hydraulic system (LO 9-2320-260-12).

a. Removal

CAUTION

- Clean area around hoses and lines before removal to prevent entry of dirt. Damage will occur if dirt or dust enters system.
- Cap or plug all openings immediately after disconnecting lines and hoses to prevent contamination.

NOTE

- Tag all wires and hydraulic lines for installation.
- Have drainage container ready to catch hydraulic oil.

1. Disconnect hydraulic hoses (8) and (10) from elbows (7) and (9).
2. Remove elbows (7) and (9) from auxiliary pump (5).
3. Remove four screws (1), terminal cover (2), and gasket (3) from auxiliary pump (5).
4. Remove three nuts (23), washers (22), and wires (18) from terminal studs (4).
5. Loosen jamnut (20) and remove wiring insulator (19) and washer (21) from auxiliary pump (5).
6. Remove four nuts (16), lockwashers (17), screws (6), and auxiliary pump (5) from mounting bracket (14). Discard lockwashers (17).
7. Remove four nuts (11), lockwashers (12), screws (15), and mounting bracket (14) from frame (13). Discard lockwashers (12).

b. Installation

1. Install mounting bracket (14) on frame (13) with four screws (15), new lockwashers (12), and nuts (11).
2. Install auxiliary pump (5) on mounting bracket (14) with four screws (6), new lockwashers (17), and nuts (16).
3. Install washer (21) on wiring insulator (19), and connect wiring insulator (19) to auxiliary pump (5). Tighten jamnut (20).

15-56. LIFTGATE AUXILIARY PUMP AND BRACKET REPLACEMENT (M820A2) (Contd)

4. Install three wires (18) on terminal studs (4) with washers (22), and nuts (23).
5. Clean gasket (3) remains from sealing surfaces of terminal cover (2) and auxiliary pump (5). Apply gasket sealant (3) to terminal cover (2) and install gasket (3) and terminal cover (2) on auxiliary pump (5) with four screws (1).
6. Wrap male threads on elbows (9) and (7) with antiseize tape.
7. Install elbows (9) and (7) on auxiliary pump (5).
8. Connect hydraulic hoses (10) and (8) on elbows (9) and (7).

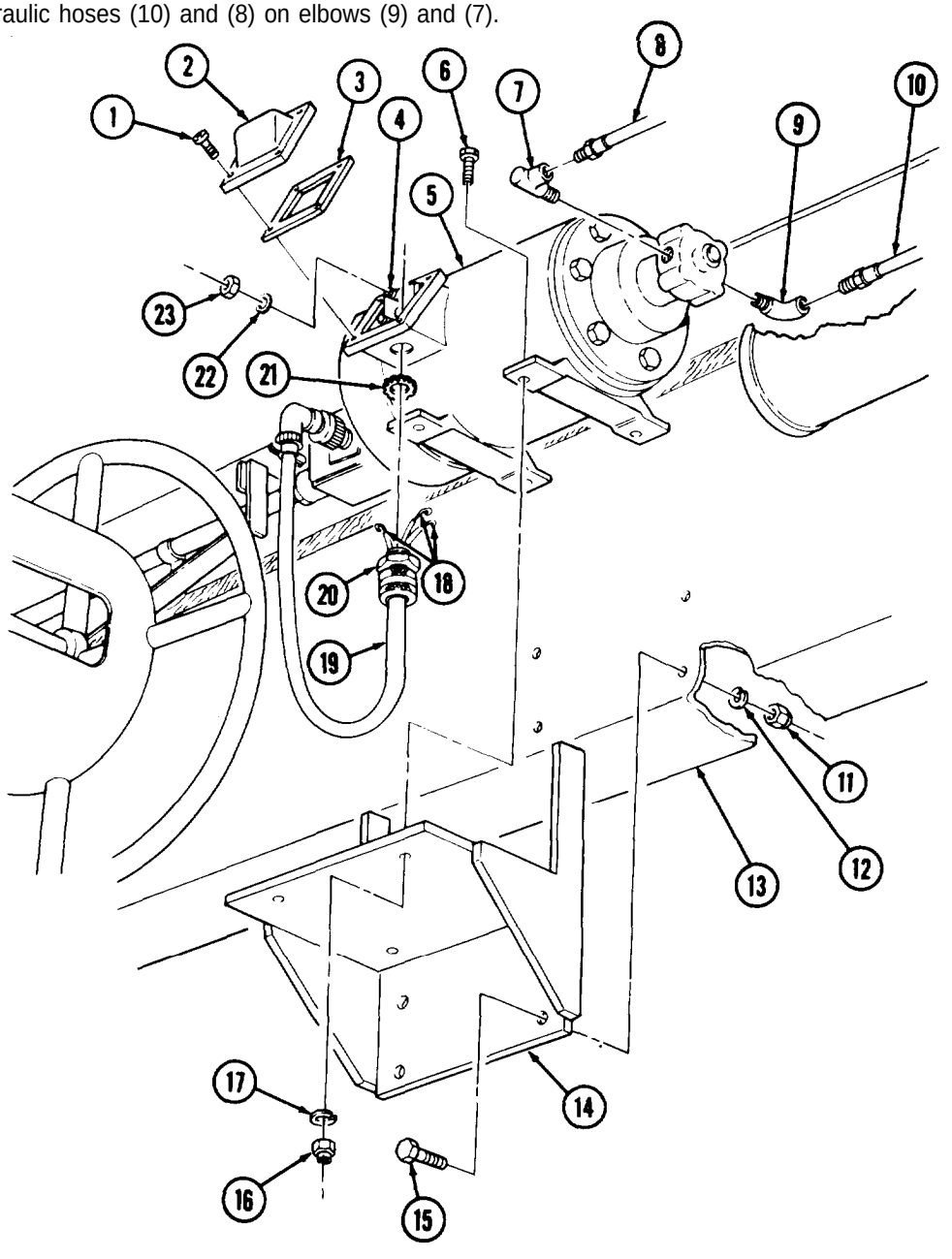

FOLLOW-ON TASKS:
- Connect battery ground cable (TM 9-2320-260-20).
- Fill hydraulic system (LO 9-2320-260-12).
- Start engine and check operation (TM 9-2320-260-10).

15-57. LIFTGATE HYDRAULIC TUBING REPLACEMENT (M820A2)

THIS TASK COVERS:

a. Removal

b. Installation

INITIAL SETUP

APPLICABLE MODELS
M820A2

TOOLS
General mechanic's tool kit (Appendix B, Item 1)

MATERIALS/PARTS
Eight lockwashers (Appendix D, Item 236)
Two tiedown straps (Appendix D, Item 524)
Cap and plug set (Appendix C, Item 6)
Antiseize tape (Appendix C, Item 50)

REFERENCES (TM)
LO 9-2320-260-12
TM 9-2320-260-10
TM 9-2320-260-34P-2

EQUIPMENT CONDITION
- Parking brake set (TM 9-2320-260-10).
- Liftgate lowered to ground level (TM 9-2320-260-10).
- Liftgate pump oil tank drained (L0 9-2320-260-12).
- Auxiliary pump wiring harness removed (para. 15-80).

a. Removal

CAUTION

- Clean area around hoses and lines before removal to prevent entry of dirt. Damage will occur if dirt or dust enters system.
- Cap or plug all openings immediately after disconnecting lines and hoses to prevent contamination.

NOTE

- Tag all hydraulic lines for installation.
- Have drainage container ready to catch hydraulic oil.

1. Remove two tiedown straps (11), screw (6), clamp (5), and hydraulic hoses (9) and (10) from frame (4). Discard tiedown straps (11).
2. Remove hydraulic hoses (9) and (10) from two tees (3) and elbows (8).
3. Remove hydraulic hoses (23) and (24) from two connectors (27) and elbows (25).
4. Remove two elbows (8) from closing cylinder (7).
5. Remove two connectors (27), flow valve (28), nipple (29), two tees (3), and nipples (2) from control valve (1).
6. Remove hydraulic hose (22) from control valve (1) and fluid restrictor (18).
7. Disconnect return hose (12) from adapter (26).
8. Remove hydraulic hose (17) from adapter (16) and tee (19).
9. Remove adapter (26), tee (19), nipple (20), and two elbows (21) from control valve (1).
10. Remove adapter (16), elbow (15), and nipple (14) from lifting cylinder (13).
11. Remove fluid restrictor (18) from lifting cylinder (13).

15-57. LIFTGATE HYDRAULIC TUBING REPLACEMENT (M820A2) (Contd.)

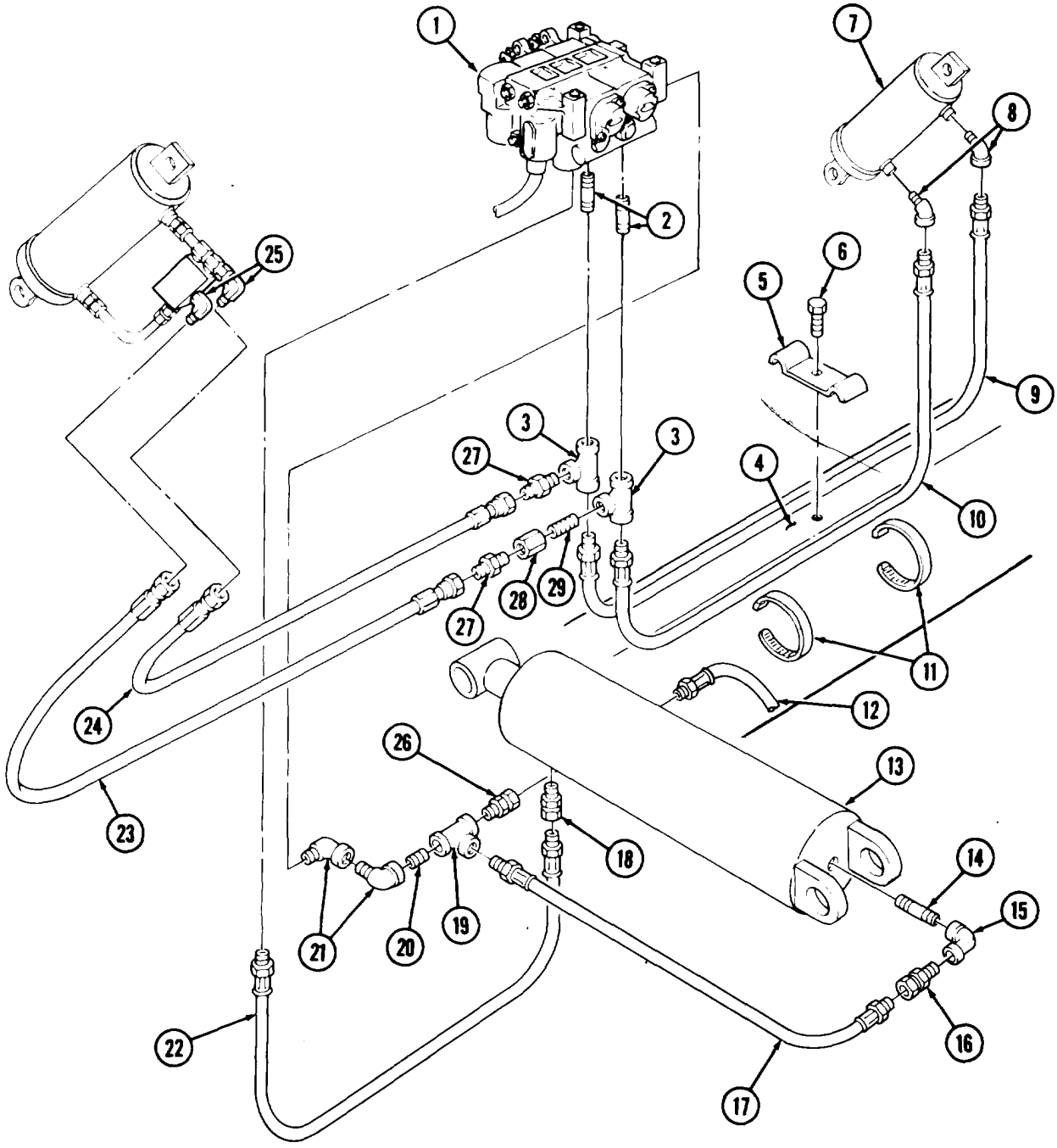

15-57. LIFTGATE HYDRAULIC TUBING REPLACEMENT (M820A2) (Contd)

12. Remove return hose (37) from adapter (1).
13. Remove inlet hose (35) from control valve (36) and adapter (38).
14. Remove adapter (1) and (38) and elbows (2) and (39) from pipes (5) and (40).
15. Remove union (7) from pipe (40) and hydraulic hose (8).
16. Remove hydraulic hose (8) from tee (9).
17. Remove hydraulic hose (13) from reducer (12) and elbow (31).
18. Remove reducer (12), check valve (11), connector (10), tee (9), check valve (11), connector (10), bushing (14), and elbow (15) from hydraulic pump (16).
19. Remove hydraulic hose (18) from elbow (17) and adapter (28).
20. Remove elbow (17) from pipe (5) and adapter (28), and elbow (27) from pump oil tank (21).
21. Remove hydraulic hose (22) from elbows (29) and (23).
22. Remove elbows (29) and (31) from pump motor (30).
23. Remove hydraulic hose (20) from elbow (19) and adapter (26).
24. Remove elbows (19) and (23), adapters (24) and (26), and tee (25) from hydraulic pump (16) and pump oil tank (21).
25. Remove eight setscrews (4) and pipes (5) and (40) from four brackets (3).
26. Remove eight nuts (33), lockwashers (32), screws (6), and four brackets (3) from frame (34). Discard lockwashers (32).

15-57. LIFTGATE HYDRAULIC TUBING REPLACEMENT (M820A2) (Contd)

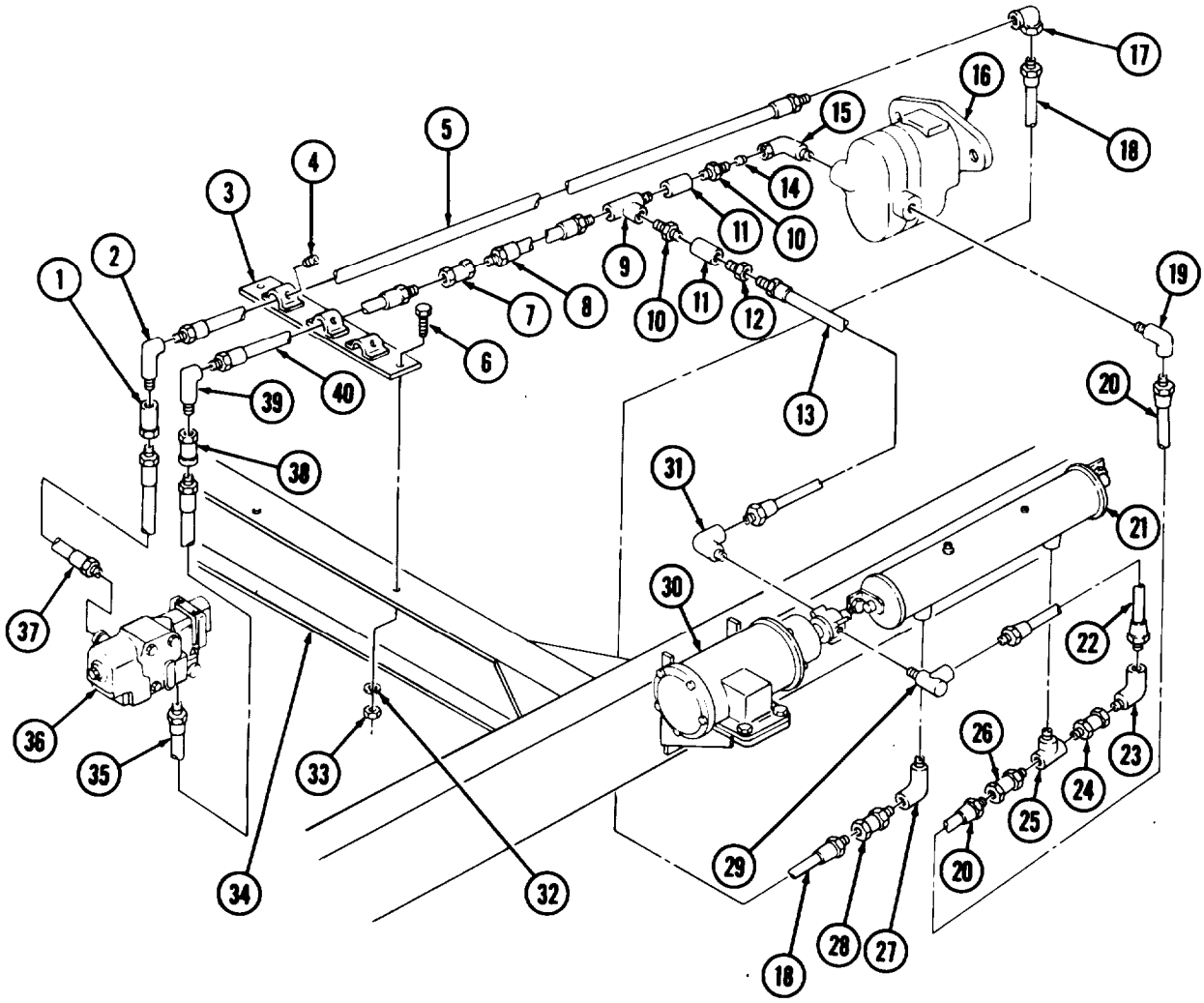

15-57. LIFTGATE HYDRAULIC TUBING REPLACEMENT (M820A2) (Contd)

b. Installation

1. Install four brackets (3) on frame (34) with eight screws (6), new lockwashers (32), and nuts (33).
2. Install pipes (40) and (5) on four brackets (3) with eight setscrews (4).
3. Wrap male threads on tees (9) and (25), adapters (24), (26), and (28), elbows (2), (15), (19), (23), (27), (29), (31), and (39), hydraulic hoses (8), (13), (18), (20), and (22), hoses (5), (35), and (37), bushing (14), connectors (10), reducer (12), and pipe (40) with antiseize tape.
4. Install tee (25), adapters (26) and (24), and elbow (23) on pump oil tank (21).
5. Install hydraulic hoses (20) and (22) on elbow (23) and adapter (26).
6. Install elbows (31) and (29) on pump motor (30).
7. Install hydraulic hoses (20) and (22) on elbows (19) and (29).
8. Install elbow (27), adapter (28), and elbow (19) on pump oil tank (21) and hydraulic pump (16).
9. Install hydraulic hose (18) on adapter (28) and elbow (17) and hose (5) on elbow (17) and (2).
10. Install elbow (15), bushing (14), connector (10), check valve (11), tee (9), connector (10), check valve (11), and reducer (12) on hydraulic pump (16).
11. Install hydraulic hose (13) on elbow (31) and reducer (12).
12. Install hydraulic hose (8) on tee (9).
13. Install union (7) on hydraulic hose (8) and pipe (40).
14. Install elbows (39) and (2) and adapters (38) and (1) on pipes (40) and (5).
15. Install inlet hose (35) on adapter (38) and control valve (36).
16. Install return hose (37) on adapter (1) and control valve (36).

15-57. LIFTGATE HYDRAULIC TUBING REPLACEMENT (M820A2) (Contd.)

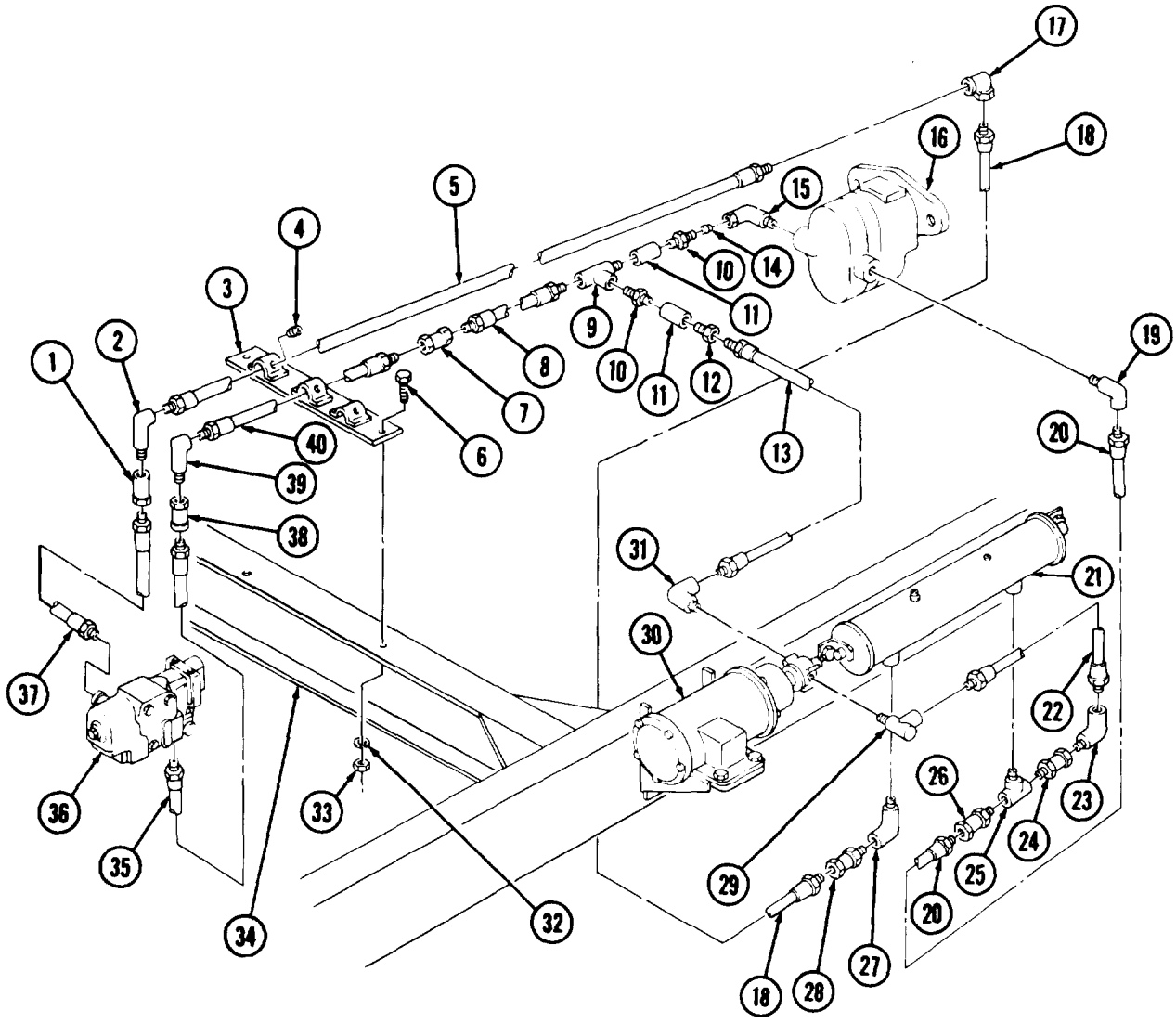

15-57. LIFTGATE HYDRAULIC TUBING REPLACEMENT (M820A2) (Contd)

17. Install fluid restrictor (18) on lifting cylinder (13).
18. Install nipple (14), elbow (15), and adapter (16) on lifting cylinder (13).
19. Install two elbows (21), nipple (20), tee (19), and adapter (26) on control valve (1).
20. Install hydraulic hose (17) on adapter (16) and tee (19).
21. Install return hose (12) on adapter (26).
22. Install hydraulic hose (22) on fluid restrictor (18) and control valve (1).
23. Install two nipples (2), tees (3), nipple (29), flow valve (28), and two connectors (27) on control valve (1).
24. Install two elbows (8) on closing cylinder (7).
25. Install hydraulic hoses (24) and (23) on two elbows (25) and connectors (27).
26. Install hydraulic hoses (10) and (9) on two elbows (8) and tees (3).
27. Install hydraulic hoses (10) and (9) on frame (4) with clamp (5), screw (6), and two new tiedown straps (11).

15-57. LIFTGATE HYDRAULIC TUBING REPLACEMENT (M820A2) (Contd)

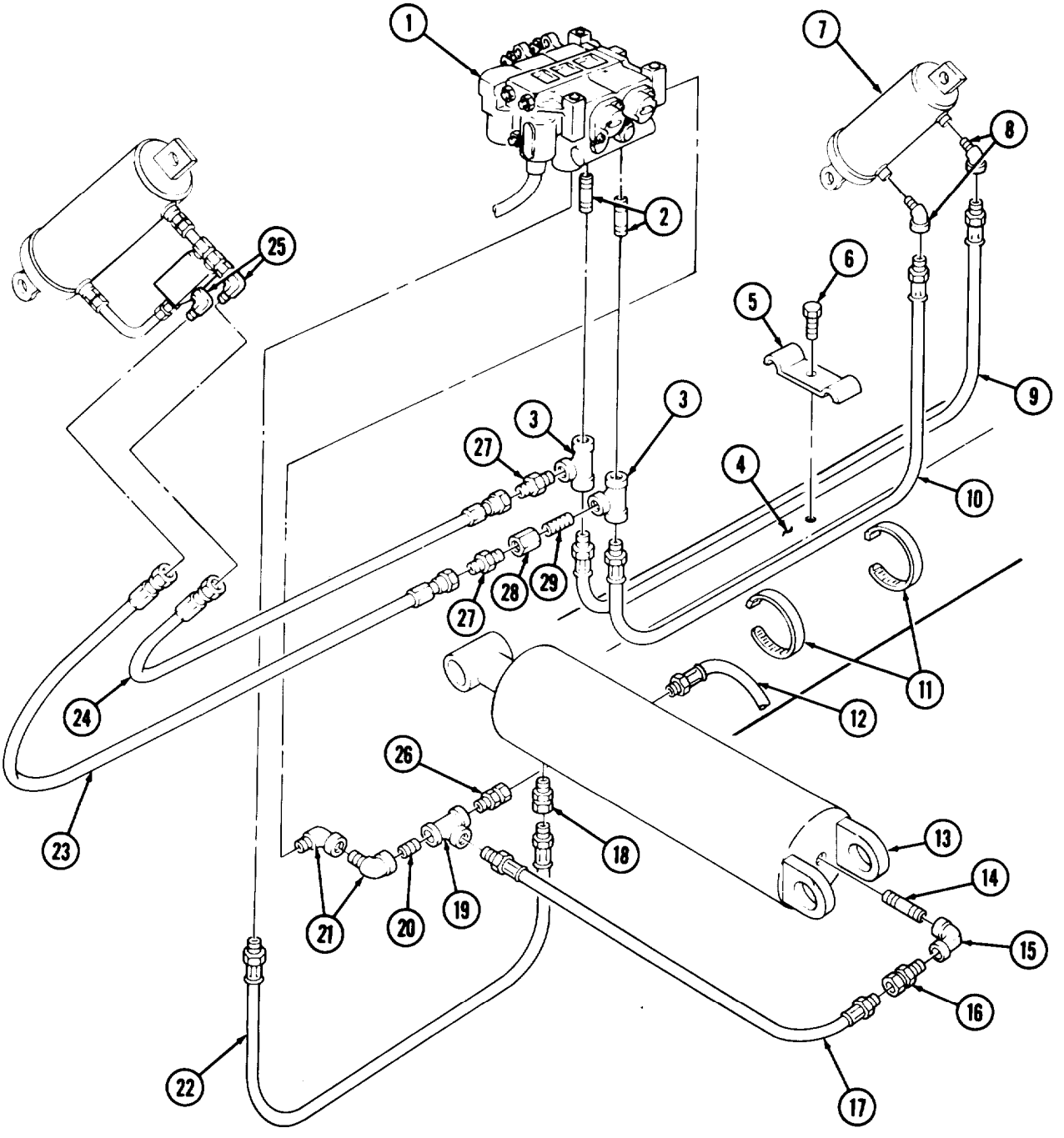

FOLLOW-ON TASKS: • Install auxiliary pump wiring harness (para. 15-80).
• Fill liftgate pump oil tank (LO 9-2320-260-12).

15-58. LIFTGATE CONTROL VALVE REPLACEMENT (M820A2)

THIS TASK COVERS:

a. Removal

b. Installation

INITIAL SETUP

APPLICABLE MODELS
M820A2

TOOLS
General mechanic's tool kit (Appendix B, Item 1)

MATERIALS/PARTS
Three lockwashers (Appendix D, Item 238)
Cap and plug set (Appendix C, Item 6)
Anti seize tape (Appendix C, Item 50)

REFERENCES (TM)
LO 9-2320-260-12
TM 9-2320-260-10
TM 9-2320-260-34P-2

EQUIPMENT CONDITION
- Parking brake set (TM 9-2320-260-10).
- Liftgate lowered to ground level (TM 9-2320-260-10).
- Control linkage removed from control valve (para. 15-55).
- Drain hydraulic system (L0 9-2320-260-12).

a. Removal

CAUTION

- Clean area around hoses and lines before removal to prevent entry of dirt. Damage will occur if dirt or dust enters system.
- Cap or plug all openings immediately after disconnecting lines and hoses to prevent contamination.

NOTE

- Tag all hydraulic lines for installation.
- Have drainage container ready to catch hydraulic oil.

1. Disconnect hydraulic hoses (13) and (17) from control valve (3).
2. Disconnect hydraulic hoses (15) and (16) from two connectors (14).
3. Disconnect hydraulic hoses (11) and (12) from two tees (10).
4. Remove three nuts (9), screws (1), lockwashers (2), and control valve (3) from main frame mount (4). Discard lockwashers (2).
5. Disconnect hydraulic lines (5) and (7) from adapter (6) and tee (8).

N0TE

Perform steps 6 through 8 if replacing control valve.

6. Remove two connectors (14), flow control valve (23), and nipple (22) from two tees (10).
7. Remove two tees (10) and nipples (21) from control valve (3).
8. Remove adapter (6), tee (8), nipple (20), and elbows (18) and (19) from control valve (3).

b. Installation

NOTE

Perform steps 1 through 4 if installing new control valve.

1. Wrap male threads on hydraulic hoses (5), (7), (11), (12), (13), and (17), connectors (14), nipples (20), (21), and (22), adapter (6), and elbows (18) and (19) with antiseize tape.
2. Install elbows (18 and (19), nipple (20), tee (8), and adapter (6) on control valve (3).
3. Install two nipples (21) and tees (10) on control valve (3).
4. Install nipple (22), flow control valve (23), and two connectors (14) on two tees (10).

15-58. LIFTGATE CONTROL VALVE REPLACEMENT (M820A2) (Contd)

5. Install control valve (3) on main frame mount (4) with three new lockwashers (2), screws (1), and nuts (9).
6. Connect hydraulic hoses (7) and (5) to tee (8) and adapter (6).
7. Connect hydraulic hoses (11) and (12) to two tees (10).
8. Connect hydraulic hoses (15) and (16) to two connectors (14).
9. Connect hydraulic hoses (13) and (17) to control valve (3).

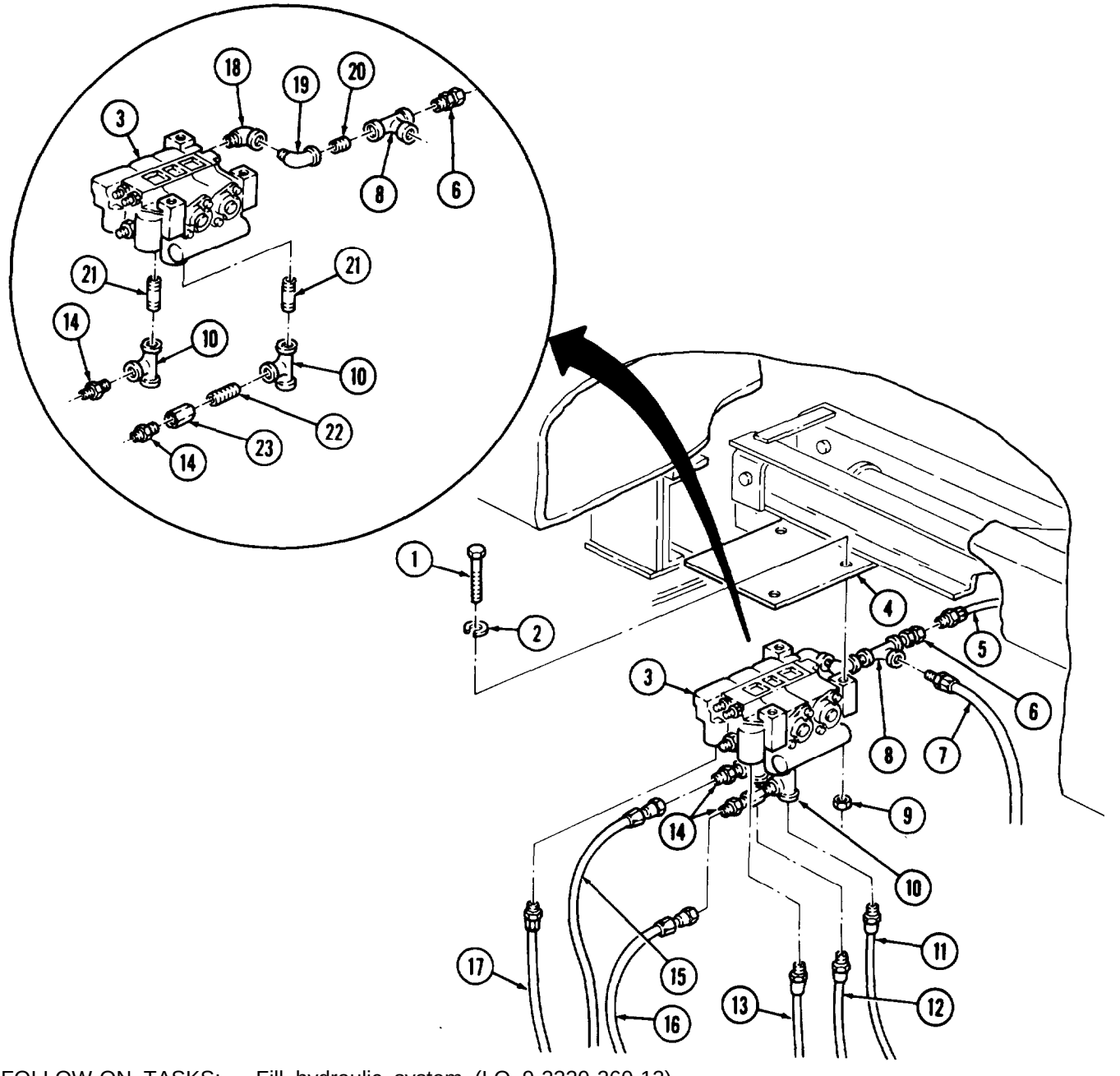

FOLLOW-ON TASKS:
- Fill hydraulic system (LO 9-2320-260-12).
- Install control linkage on control valve (para. 15-55).
- Operate liftgate (TM 9-2320-260-10) and check for leaks.

15-59. LIFTGATE CYLINDER MAINTENANCE (M820A2)

THIS TASK COVERS:

a. Removal
b. Disassembly
c. Cleaning and Inspection
d. Assembly
e. Installation

INITIAL SETUP

APPLICABLE MODELS
M820A2

TOOLS
General mechanic's tool kit (Appendix B, Item 1)
Arbor press (Appendix B, Item 7)
Vise (Appendix B, Item 38)

MATERIALS/PARTS
Two pins (Appendix D, Item 318)
Two cotter pins (Appendix D, Item 33)
O-ring (Appendix D, Item 275)
O-ring (Appendix D, Item 277)
O-ring (Appendix D, Item 279)
O-ring (Appendix D, Item 281)
Seal (Appendix D, Item 414)
Seal (Appendix D, Item 417)

MATERIALS/PARTS (Contd)
Bushing (Appendix D, Item 7)
Lubricating oil (Appendix C, Item 21)

REFERENCES (TM)
LO 9-2320-260-12
TM 9-2320-260-10
TM 9-2320-260-34P-2

EQUIPMENT CONDITION
- Parking brake set (TM 9-2320-260-10).
- Liftgate lowered to ground level (TM 9-2320-260-10).
- Drain hydraulic system (LO 9-2320-260-12).

SPECIAL ENVIRONMENTAL CONDITIONS
Perform this task in clean, dust-free area.

a. Removal

1. Remove hydraulic tubing (12) and (13) from adapter (11) and fluid restrictor (14).
2. Remove adapter (11), elbow (10), and nipple (9) from liftgate cylinder (3).
3. Remove fluid restrictor (14) from liftgate cylinder (3).
4. Remove two pins (1) and straight pin (8) from liftgate cylinder (3) and main frame (2). Discard pins (1).
5. Remove two cotter pins (5) and straight pin (7) from piston rod (4) and lift frame (6). Discard cotter pins (5).
6. Remove liftgate cylinder (3) from main frame (2).

b. Disassembly

CAUTION

Perform this task in a clean, dust-free area. Failure to do so may result in damage to equipment.

1. With liftgate cylinder (3) positioned vertically in vise, loosen setscrew (15) and remove retaining nut (17) and piston rod (4) from liftgate cylinder (3).
2. With piston rod (4) positioned vertically in vise, remove nut (27), piston (25), and front head (20) from piston rod (4).
3. Remove setscrew (15) and grommet (16) from retaining nut (17).
4. Remove O-ring (24) and seal (23) from piston (25). Discard O-ring (24) and seal (23).
5. Remove O-ring (18), seal (19), and O-rings (21) and (22) from front head (20). Discard O-rings (18), (21), (22), and seal (19).
6. Remove two grease fittings (26) from liftgate cylinder (3).
7, Using arbor press, remove bushing (28) from piston rod (4). Discard bushing (28).

15-59. LIFTGATE CYLINDER MAINTENANCE (M820A2) (Contd)

c. Cleaning and Inspection

1. For general cleaning instructions, refer to para. 2-8.
2. For general inspection instructions, refer to para. 2-9.

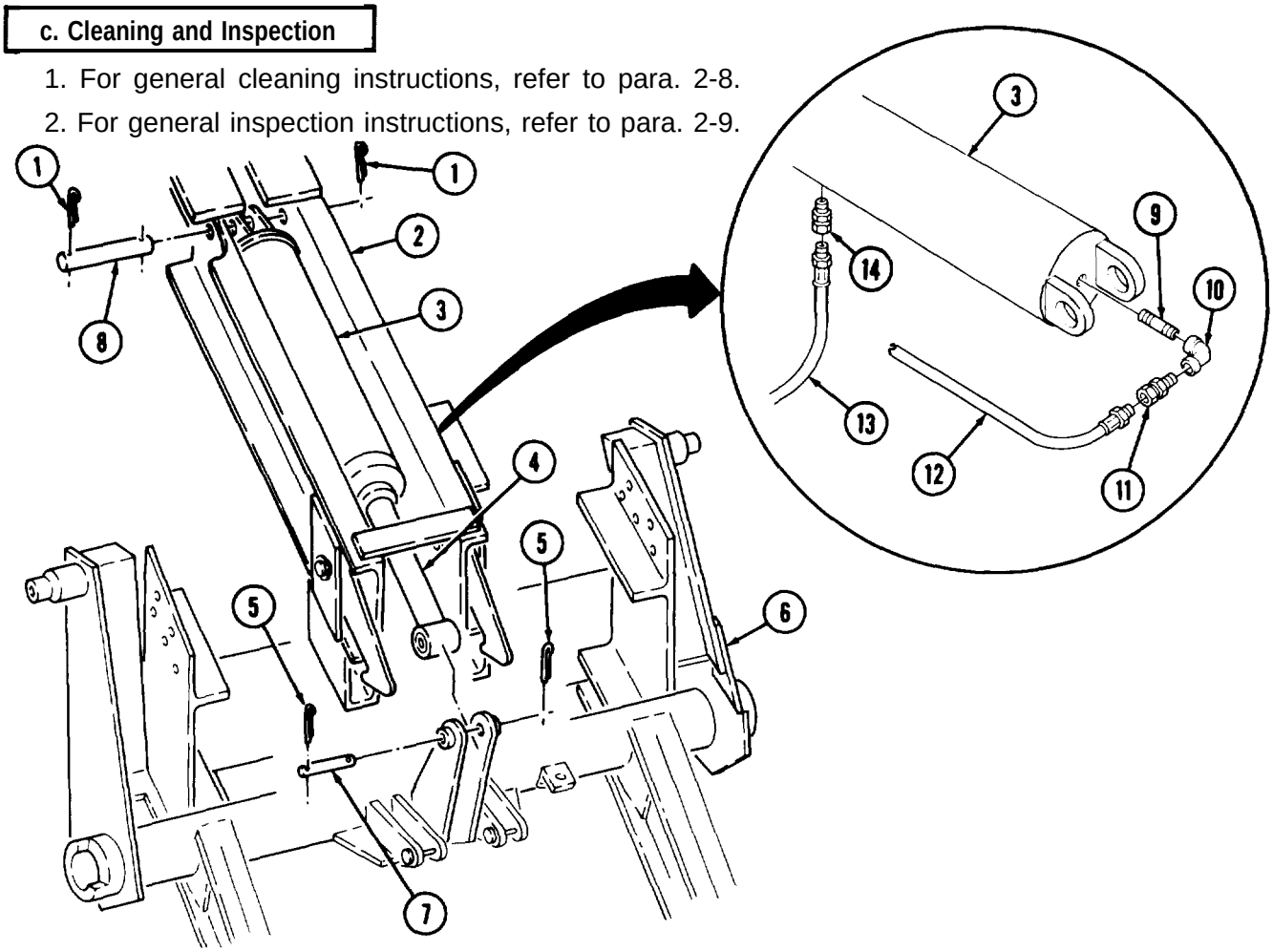

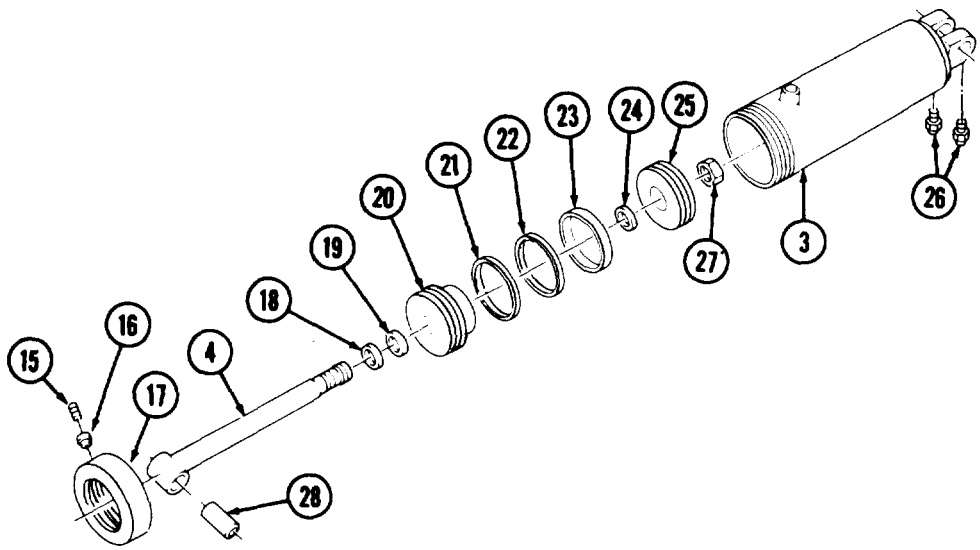

15-59. LIFTGATE CYLINDER MAINTENANCE (M820A2) (Contd)

d. Assembly

CAUTION

Perform this task in a clean, dust-free area. Failure to do so may result in damage to equipment.

NOTE

Coat all parts with lubricating oil before assembly.

1. Using arbor press, install new bushing (16) on piston rod (4).
2. Install two grease fittings (13) on liftgate cylinder (14).
3. Install new O-rings (8) and (9), new seal (5), and new O-ring (6) on front head (7).
4. Install new seal (11) and new O-ring (10) on piston (12).
5. Install grommet (2) and setscrew (1) on retaining nut (3). Do not tighten setscrew (1).
6. With piston rod (4) positioned vertically in vise, install front head (7), piston (12), and nut (15) on piston rod (4).
7. With liftgate cylinder (14) positioned vertically in vise, install piston rod (4) in liftgate cylinder (14) with retaining nut (3).
8. Tighten setscrew (1) on retaining nut (3) and liftgate cylinder (14).

e. Installation

1. Position liftgate cylinder (14) on main frame (18), and install liftgate cylinder (14) on main frame (18) with straight pin (22) and two new pins (17).
2. Install piston rod (4) on lift frame (20) with straight pin (21) and two new cotter pins (19).
3. Install nipple (23), elbow (24), and adapter (25) on liftgate cylinder (14).
4. Install fluid restrictor (28) on liftgate cylinder (14).
5. Install hydraulic tubing (27) and (26) on fluid restrictor (28) and adapter (25).

15-59. LIFTGATE CYLINDER MAINTENANCE (M820A2) (Contd)

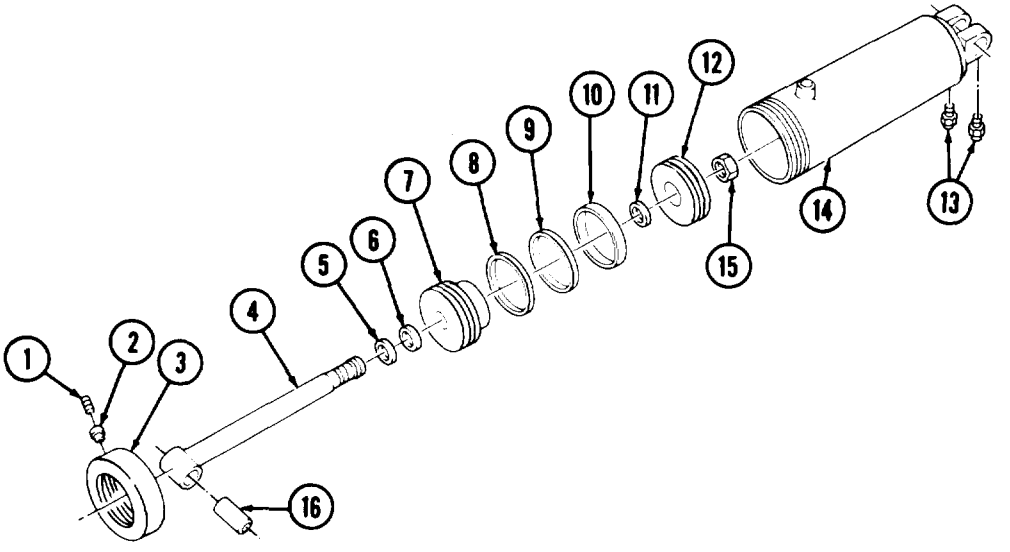

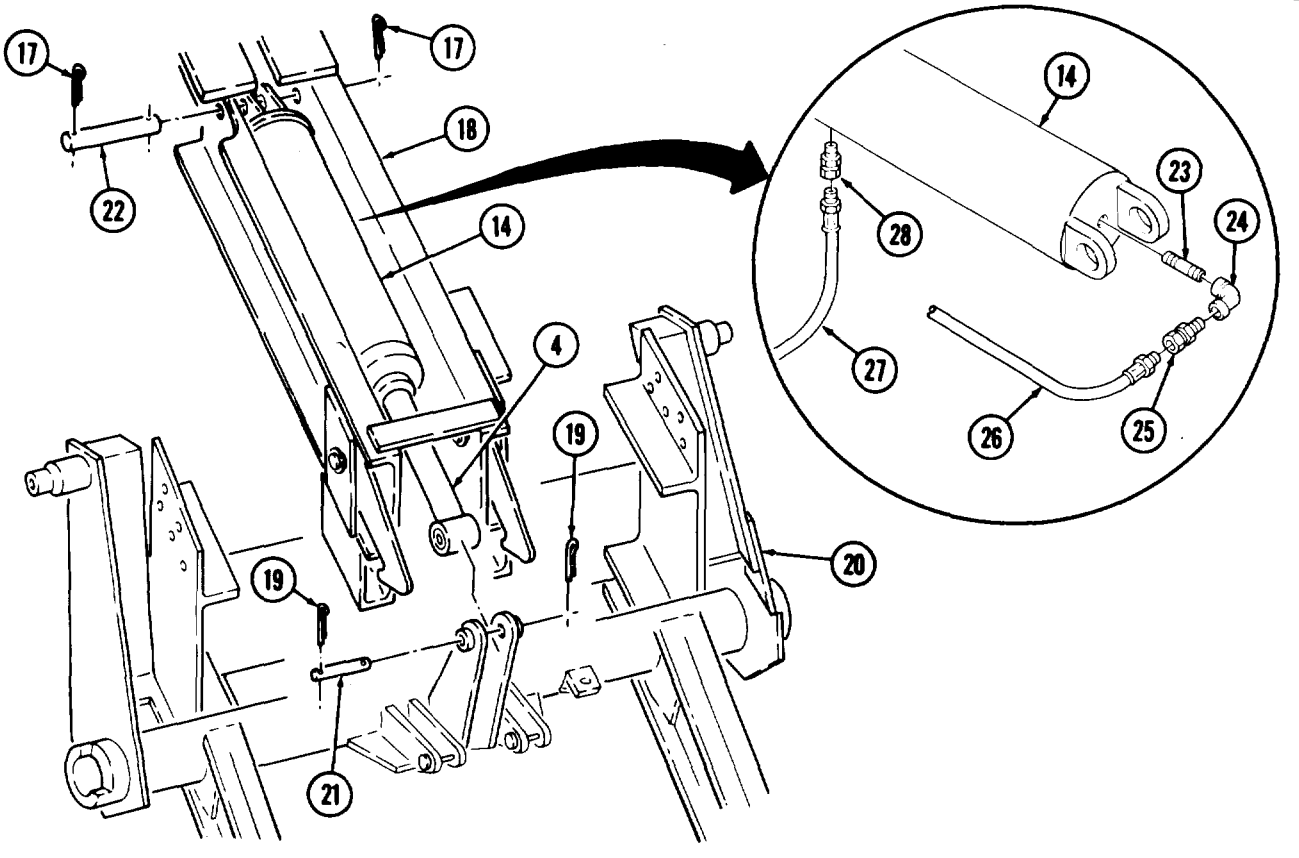

FOLLOW-ON TASKS:
- Grease lubrication fittings (LO 9-2320-260-12).
- Fill hydraulic system (LO 9-2320-260-12).
- Operate liftgate (TM 9-2320-260-10) and check for leaks.

15-60. LIFTGATE CLOSING CYLINDERS MAINTENANCE (M820A2)

THIS TASK COVERS:

a. Removal
b. Disassembly
c. Cleaning and Inspection
d. Assembly
e. Installation

INITIALSETUP

APPLICABLE MODELS
M820A2

TOOLS
General mechanic's tool kit (Appendix B, Item 1)
Vise (Appendix B, Item 38)

MATERIALS/PARTS
Lockwasher (Appendix D, Item 240)
O-ring (Appendix D, Item 267)
O-ring (Appendix D, Item 287)
O-ring (Appendix D, Item 289)
O-ring (Appendix D, Item 291)
Seal (Appendix D, Item 419)
No seals (Appendix D, Item 421)
Four cotter pins (Appendix D, Item 33)

MATERIALS/PARTS (Contd)
Lubricating oil (Appendix C, Item 21)
Cap and plug set (Appendix C, Item 6)
Antiseize tape (Appendix C, Item 50)

REFERENCES (TM)
LO 9-2320-260-12
TM 9-2320-260-10
TM 9-2320-260-34P-2

EQUIPMENT CONDITION
- Parking brake set (TM 9-2320-260-10).
- Lock liftgate in raised and closed position (TM 9-2320-260-10).
- Drain hydraulic system (LO 9-2320-260-12).

SPECIAL ENVIRONMENTAL CONDITIONS
Perform this task in clean dust-free area.

a. Removal

CAUTION

- Clean area around hoses and lines before removal to prevent entry of dirt. Damage will occur if dirt or dust enters system.
- Cap or plug all openings immediately after disconnecting lines and hoses to prevent contamination. Remove caps or plugs prior to installation. Failure to do so may result in injury to personnel.

NOTE

- Tag all hydraulic hoses for installation.
- Have drainage container ready to catch hydraulic fluid.

1. Disconnect hydraulic hoses (11) and (12) from two elbows (7) and (8).
2. Disconnect hydraulic hoses (15) and (18) from elbows (16) and (17).
3. Remove two screws (1), lockwashers (2), washers (3), two cotter pins (13), cotter pins (9), pivot pins (10), and closing cylinders (4) and (6) from main frame (5) and two clutches (14). Discard lockwashers (2) and cotter pins (13) and (9).

b. Disassembly

CAUTION

Perform this task in a clean, dust-flee area. Failure to do so may result in damage to equipment.

1. Remove elbows (16) and (17) from closing cylinder (4).
2. Remove elbows (7) and (8) from tee, (21) and check valve (22).
3. Remove tubes (20) and (24) frorn two connectors (19), tee (21), and connector (23).

15-60. LIFTGATE CLOSING CYLINDERS MAINTENANCE (M820A2) (Contd)

4. Remove tee (21) and connector (23) from check valve (22).
5. Remove two connectors (19) from closing cylinder (6).
6. With housing (34) facing up in vise, remove setscrew (26) and grommet (27) from retaining nut (25).
7. Remove retaining nut (25) and piston rod (28) from cylinder (34).
8. With piston rod (28) facing up in vise, remove nut (35), piston (36), and actuating head (31) from piston rod (28).
9. Remove O-ring (37) and two seals (38) from piston (36). Discard O-ring (37) and seals (38).
10. Remove O-ring (29), seal (30), and O-rings (32) and (33) from actuating head (31). Discard

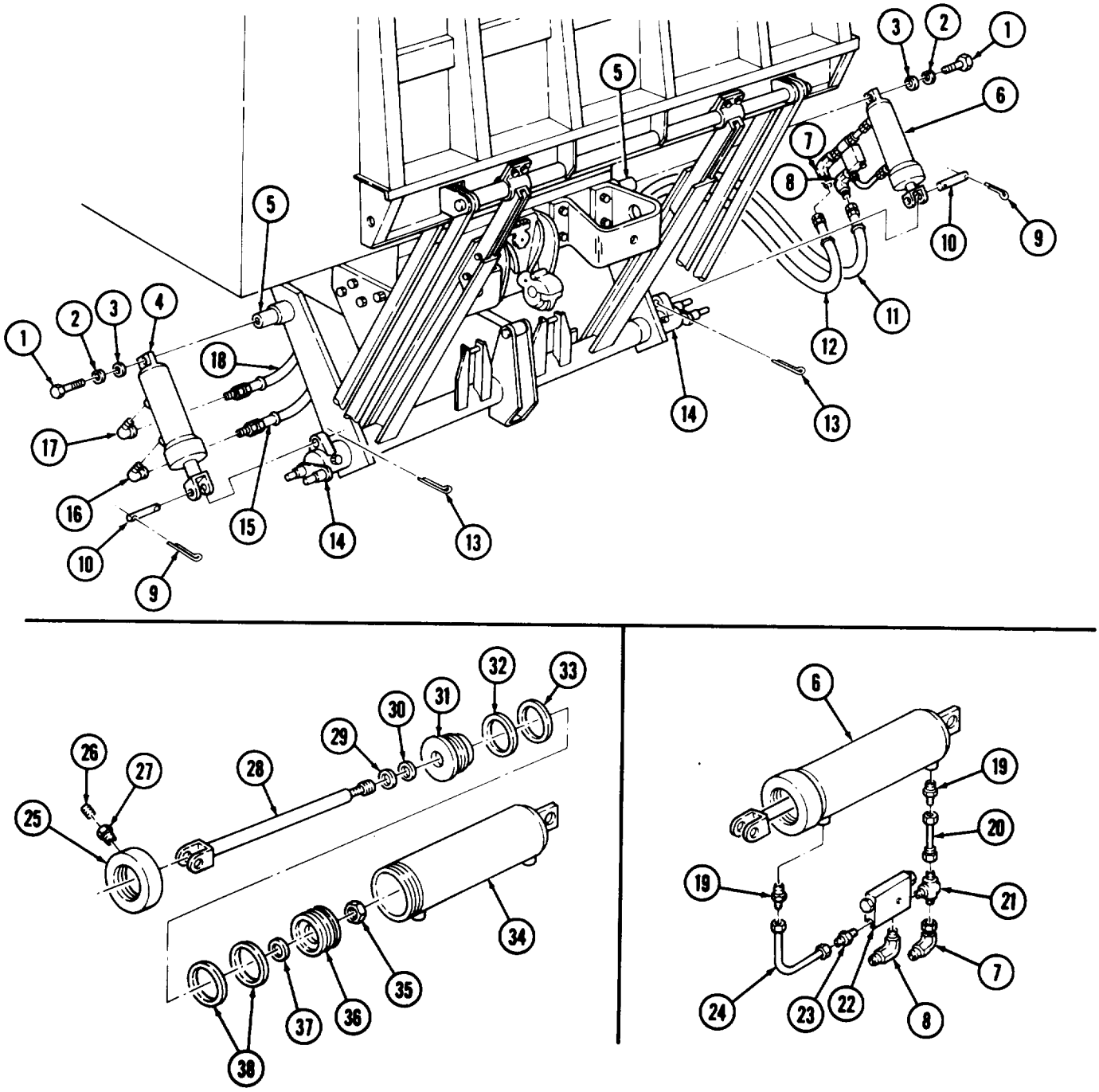

15-60. LIFTGATE CLOSING CYLINDERS MAINTENANCE (M820A2) (Contd)

c. Cleaning and Inspection

1. For general cleaning instructions, refer to para. 2-8.
2. For general inspection instructions, refer to para. 2-9.

d. Assembly

CAUTION

Perform this task in a clean, dust-free area. Failure to do so may result in damage to equipment.

NOTE

Coat all closing cylinder internal parts with lubricating oil before assembly.

1. Install new O-rings (8) and (9), new seal (6), and new O-ring (5) on actuating head (7).
2. Install two new seals (14) and new O-ring (13) on piston (12).
3. With piston rod (4) facing up in vise, install actuating head (7) and piston (12) on piston rod (4) with nut (11).
4. Wrap male threads on elbows (19), (20), (36), and (37), connectors (16) and (22), tee (18), and hydraulic hoses (35) and (38) with antiseize tape.
5. With housing (10) facing up in vise, install piston rod (4) in cylinder (10) with retaining nut (1).
6. Install grommet (3) and setscrew (2) on retaining nut (1).
7. Install two connectors (16) on closing cylinder (15).
8. Install connector (22) and tee (18) on check valve (21).
9. Install elbows (19) and (20) on check valve (21) and tee (18).
10. Install two tubes (17) and (23) on tee (18), connector (22) and two connectors (16).
11. Install two elbows (36) and (37) on closing cylinder (27).

e. Installation

1. Install closing cylinders (15) and (27) on main frame (28) and two clutches (34) with two washers (26), new lockwashers (25), screws (24), pivots (30), and four new cotter pins (29) and (33).
2. Connect hydraulic hoses (31) and (32) to elbows (19) and (20).
3. Connect hydraulic hoses (35) and (38) to elbows (36) and (37).

15-60. LIFTGATE CLOSING CYLINDERS MAINTENANCE (M820A2) (Contd)

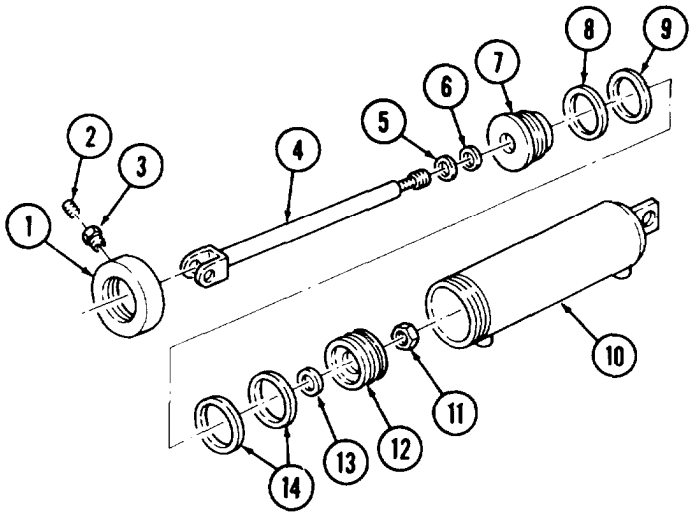

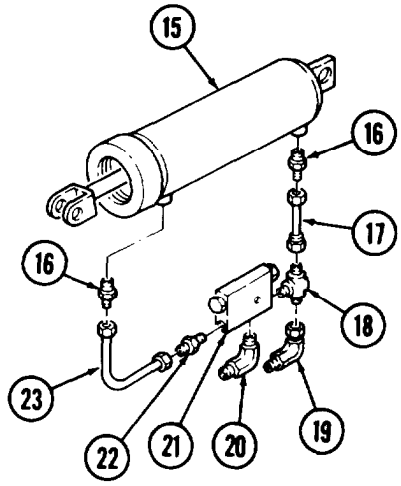

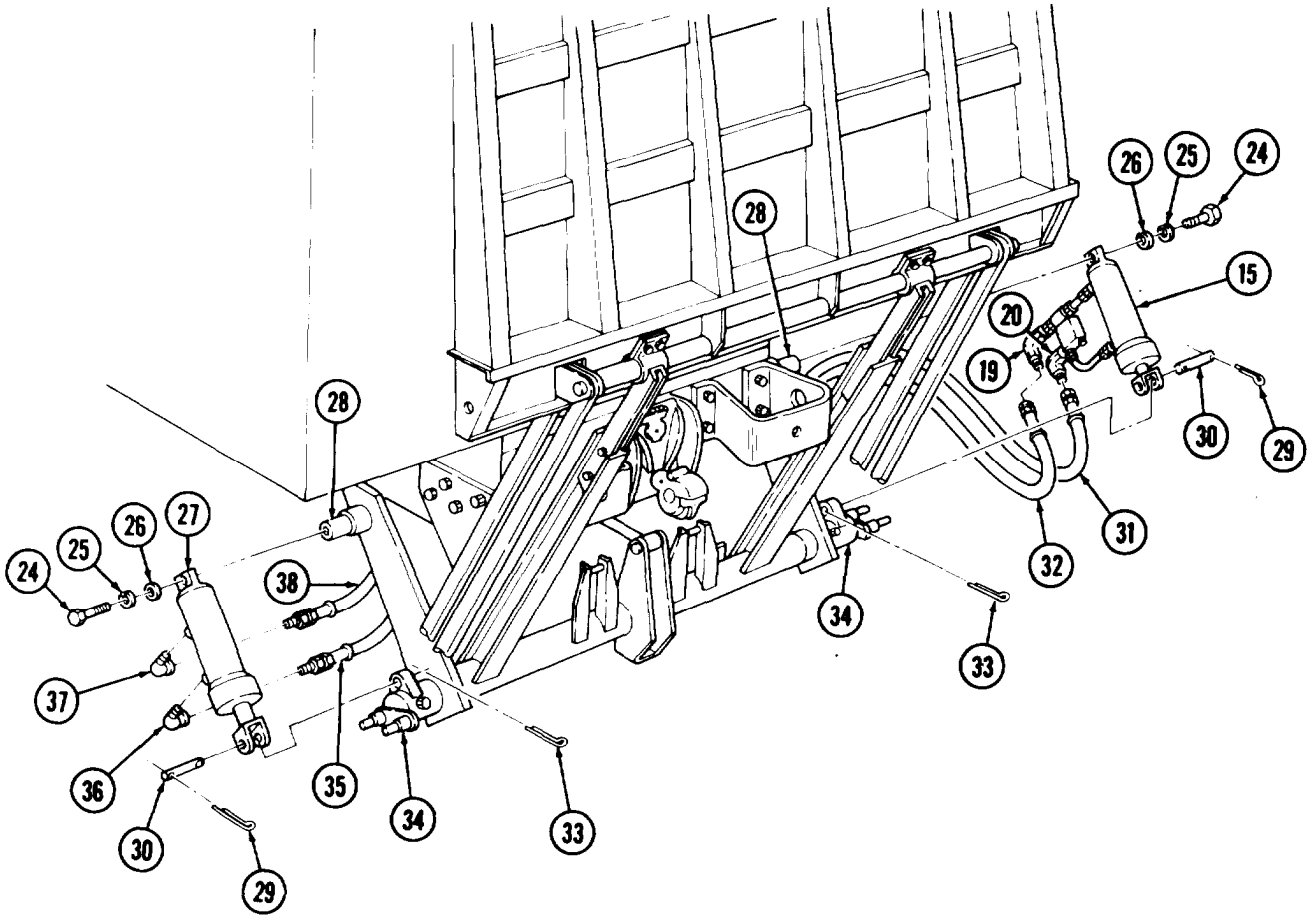

FOLLOW-ON TASKS: • Fill hydraulic system (LO 9-2320-260-12).
Operate liftgate (TM 9-2320-260-10) and check for leaks.

15-61. LIFTGATE HYDRAULIC PUMP REPLACEMENT (M820A2)

THIS TASK COVERS:

a. Removal

b. Installation

INITIAL SETUP

APPLICABLE MODELS
M820A2

TOOLS
General mechanic's tool kit (Appendix B, Item 1)

MATERIALS/PARTS
Six lockwashers (Appendix D, Item 232)
Antiseize tape (Appendix C, Item 50)

PERSONNEL REQUIRED
Two

REFERENCES (TM)
TM 9-2320-260-20
TM 9-2320-260-34P-2

EQUIPMENT CONDITION
Pump driveshaft removed (TM 9-2320-260-20).

NOTE

- Clean area around hoses and lines before removal to prevent entry of dirt. Damage will occur if dirt or dust enters system.
- Cap or plug all openings immediately after disconnecting lines and hoses to prevent contamination. Remove caps or plugs prior to installation. Failure to do so may result in injury to personnel.
- Tag all hoses and lines for installation.
- Assistant will hold hydraulic pump during removal and installation.

a. Removal

1. Remove hydraulic hose (11) from tee (14).
2. Remove hydraulic hose (8) from reducer (9).
3. Remove hydraulic hose (12) from elbow (10).
4. Remove two nuts (3), lockwashers (4), screws (13), and hydraulic pump (15) from bracket (5). Discard lockwashers (4).
5. Remove four nuts (7), lockwashers (6), screws (2), and bracket (5) from frame (1). Discard lockwashers (6).

NOTE

Perform steps 6 and 7 if replacing hydraulic pump.

6. Remove reducer (9), check valve (17), connector (18), tee (14), check valve (19), connector (20), bushing (21), and elbow (16) from hydraulic pump (15).
7. Remove elbow (10) from hydraulic pump (15).

b. Installation

NOTE

Perform steps 1 through 3 if installing new hydraulic pump.

1. Install elbow (10) on hydraulic pump (15).
2. Wrap threads of elbow (10), elbow (16), bushing (21), connector (20), tee (14), connector (18), reducer (9), and hoses (8), (11), and (12) with antiseize tape.
3. Install elbow (16), bushing (21), connector (20), check valve (19), tee (14), connector (18), check valve (17), and reducer (9) on hydraulic pump (15).

15-61. LIFTGATE HYDRAUL'C PUMP REPLACEMENT (M820A2) (Contd)

4. Install bracket (5) on frame (1) with four screws (2), new lockwashers (6), and nuts (7).
5. Install hydraulic pump (15) on bracket (5) with two screws (13), new lockwashers (4). and nuts (3).
6. Install hydraulic hose (12) cm elbow (10).
7. Install hydraulic hose (8) on reducer (9).
8. Install hydraulic hose (11) on tee (14).

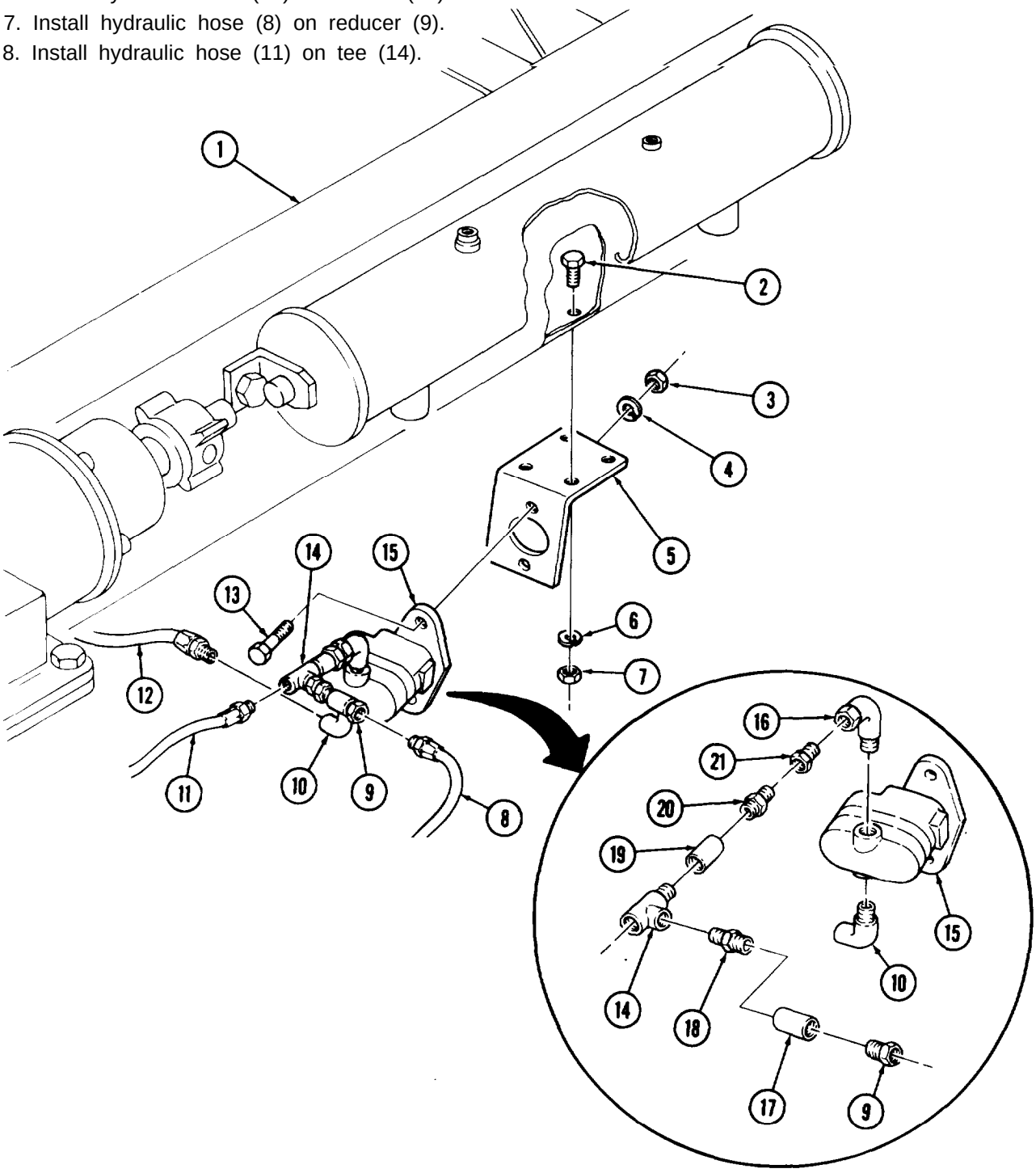

FOLLOW-ON TASKS:
- Install hydraulic tubing on pump (para. 15-57).
- Install pump driveshaft (TM 9-2320-260-20).

15-62. LIFTGATE PUMP OIL TANK REPLACEMENT (M820A2)

THIS TASK COVERS:

a. Removal, b. Installation

INITIAL SETUP

APPLICABLE MODELS
M820A2

TOOLS
General mechanic's tool kit (Appendix B, Item 1)

MATERIALS/PARTS
Two lockwashers (Appendix D, Item 236)
Antiseize tape (Appendix C,Item 50)

REFERENCES (TM)
TM 9-2320-260-10
TM 9-2320-260-34P-2

EQUIPMENT CONDITION
- Parking brake set (TM 9-2320-260-10).
- Liftgate hydraulic tubing removed (para. 15-57).

NOTE

- Clean area around hoses and lines before removal to prevent entry of dirt. Damage will occur if dirt or dust enters system.
- Cap or plug all openings immediately after disconnecting lines and hoses to prevent contamination. Remove caps or plugs prior to installation. Failure to do so may result in injury to personnel.
- Tag all lines and hoses for installation.

a. Removal

1. Remove hydraulic hose (3) from adapter (4).
2. Remove hydraulic hose (11) from adapter (10).
3. Remove hydraulic hose (9) from elbow (8).
4. Remove two nuts (7), screws (1), lockwashers (2), brackets (12), and oil tank (5) from frame (6). Discard lockwashers (2).
5. Remove adapter (4) and elbow (18) from oil tank (5).
6. Remove elbow (8), adapters (10) and (16), and tee (17) from oil tank (5).
7. Remove breather cap (14), bushing (13), and plug (15) from oil tank (5).

15-62. LIFTGATE PUMP OIL TANK REPLACEMENT (M820A2) (Contd)

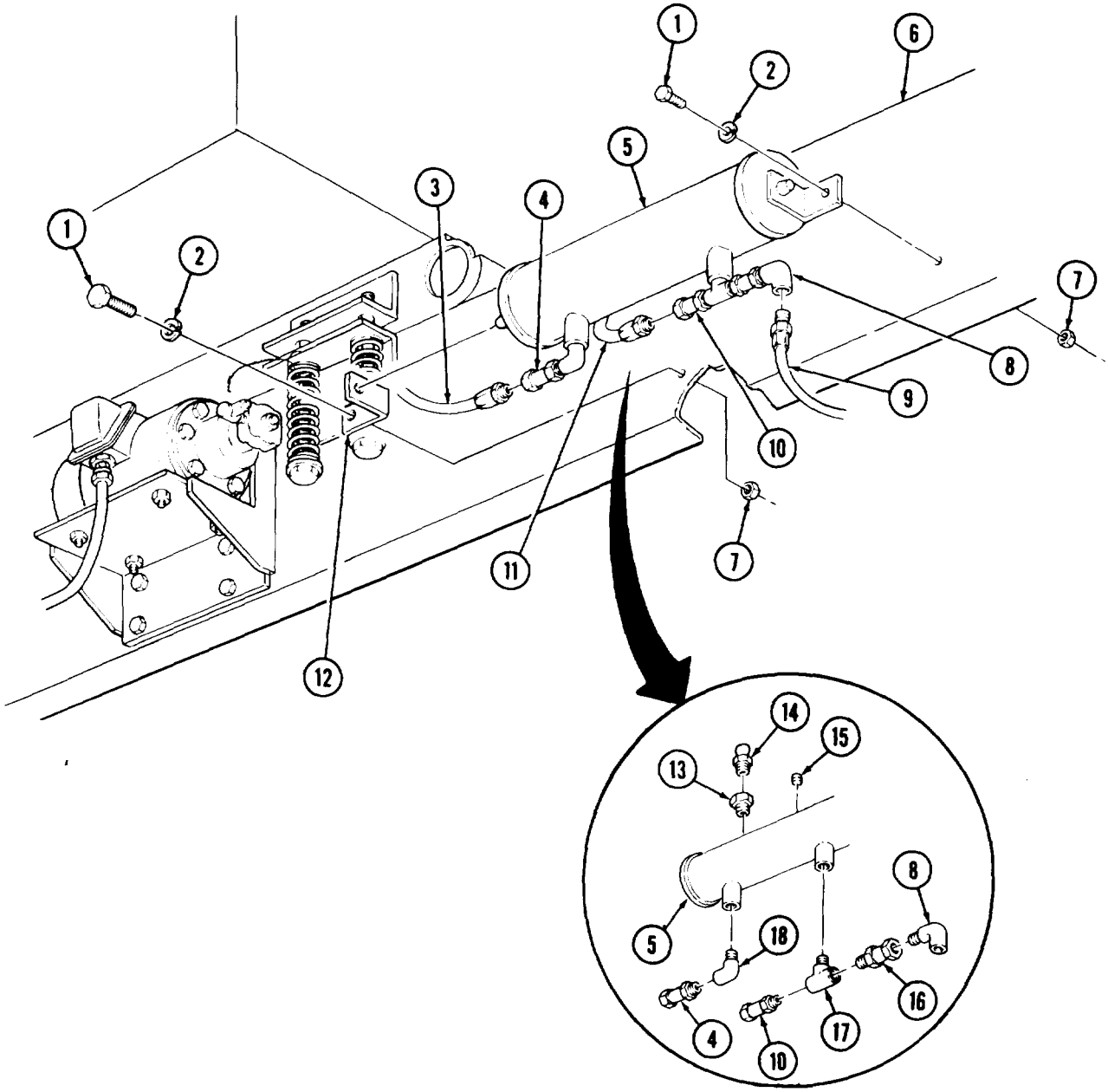

15-62. LIFTGATE PUMP OIL TANK REPLACEMENT (M820A2) (Contd)

b. Installation

1. Wrap male threads on adapters (4), (10), and (16), hydraulic hoses (3), (9), and (11), tee (17), and elbows (8) and (18) with antiseize tape.
2. Install bushing (13), breather cap (14), and plug (15) on oil tank (5).
3. Install elbow (8), adapters (10) and (16), and tee (17) on oil tank (5).
4. Install elbow (18) and adapter (4) on oil tank (5).
5. Install oil tank (5) on frame (6) with two brackets (12), screws (l), new lockwashers (2), and nuts (7).
6. Install hydraulic hose (3) on adapter (4).
7. Install hydraulic hose (11) on adapter (10).
8. Install hydraulic hose (9) on elbow (8).

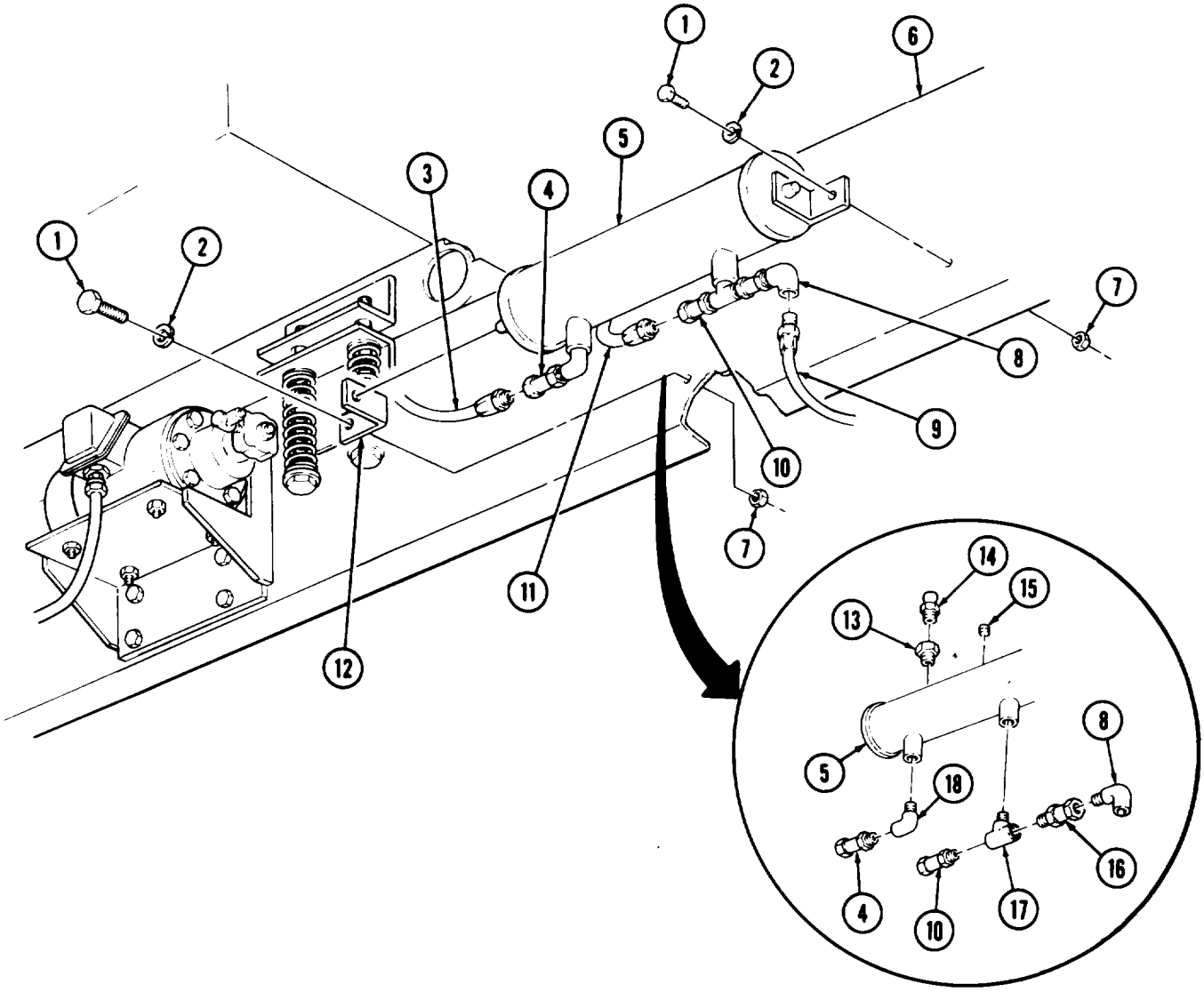

FOLLOW-ON TASK: Install liftgate hydraulic tubing (para. 15-57).

Section VI. VAN BODY ELECTRICAL COMPONENTS MAINTENANCE

15-63. VAN BODY ELECTRICAL COMPONENTS MAINTENANCE INDEX

PARA. NO.	TITLE	PAGE NO.
15-64.	Main Wiring Harness Replacement	15-240
15-65.	Air Conditioner Wiring Harness Replacement	15-244
15-66.	Heater Wiring Harness Replacement	15-248
15-67.	Electric Heater (10 kW) Wiring Harness Replacement	15-252
15-68.	Heater Fuel Pump Wiring Harness Replacement	15-256
15-69.	Circuit Breaker Harness and Circuit Breaker Replacement	15-258
15-70.	Blackout Bypass Wiring Harness Replacement	15-260
15-71.	Blackout and Clearance Light Wiring Harness Replacement	15-264
15-72.	Right and Left Side Blackout Wiring Harness Replacement	15-266
15-73.	Left Side Emergency Lamp Wiring Harness Replacement	15-270
15-74.	Right Side Emergency Lamp Wiring Harness Replacement	15-274
15-75.	Telephone Post Wiring Harness Replacement	15-278
15-76.	3-Phase Receptacle Wiring Harness Replacement	15-280
15-77.	Flexible Converter Wiring Harness Replacement	15-282
15-78.	400 Hz Supply Wiring Harness Replacement	15-284
15-79.	400 Hz Receptacle Wiring Harness Replacement	15-288
15-80.	Converter and Auxiliary Pump Wiring Harnesses Replacement	15-290
15-81.	Entrance Receptacle Replacement	15-294
15-82.	Load Center Maintenance	15-296
15-83.	Load Center Conduit Replacement	15-312
15-84.	Control Center Box Maintenance	15-316
15-85.	400 Hz Converter and Support Bracket Replacement	15-320
15-86.	Converter Junction Box Replacement	15-322
15-87.	400 Hz Converter Harness Conduit Replacement	15-326
15-88.	Outlet Box Replacement	15-328
15-89.	AC Manual Starter Switches Replacement	15-330
15-90.	Electrical Box Replacement	15-332
15-91.	Blackout and Emergency Light Fixtures Replacement	15-333
15-92.	Fluorescent Light Fixtures Maintenance	15-334
15-93.	Ceiling Light Fixtures Replacement (M820A1)	15-336

15-64. MAIN WIRING HARNESS REPLACEMENT

THIS TASK COVERS:

a. Removal **b. Installation**

INITIAL SETUP

APPLICABLE MODELS
M820, M820A1, M820A2

TEST EQUIPMENT
Multimeter (Appendix B, Item 115)

TOOLS
General mechanic's tool kit (Appendix B, Item 1)
Tool, kit, electrical (Appendix B, Item 106)

MATERIALS/PARTS
Safety wire (Appendix D, Item 372)
Electrical tape (Appendix C, Item 51)

REFERENCES (TM)
TM 9-2320-260-10
TM 9-2320-260-20
TM 9-2320 -260-34P-2

EQUIPMENT CONDITION
- External power source disconnected (TM 9-2320-260-10).
- Battery ground cable disconnected (TM 9-2320-260-20).
- Ceiling filler and side panels removed (M820, M820A2) (para. 15-44).
- Ceiling removed (M820A1) (para. 15-36).

CAUTION

Use care when replacing wiring harness. Excessive snagging or pulling may damage wiring harness.

a. Removal

NOTE
- Tag wires, cables, and leads for installation.
- The left and right main wiring harnesses are replaced the same. This procedure covers the right main wiring harness.

1. Remove six screws (1) and cover (16) from load center (7).
2. Remove three screws (13) and five wires (14) from three 20-amp circuit breakers (12).
3. Remove three setscrews (9) and wires (3) from relay (8).
4. Remove setscrew (11) and wire (15) from neutral bar (10).
5. Remove screw (4) and clamp (5) from mounting plate (6).
6. Remove twelve screws (20) and clamps (19) from van ceiling (17).
7. Remove grommet (21) from van side panel (22).
8. Remove three screws (23) and wire clip (24) from van side panel (22).

NOTE
- Safety wire will be used to install new wiring harness. Do not cut safety wire from spool until wiring harness has been pulled through and proper length has been obtained.
- Safety wire must be attached to wires with electrical tape.

9. Remove main wiring harness (2) from van body (18).

15-64. MAIN WIRING HARNESS REPLACEMENT (Contd)

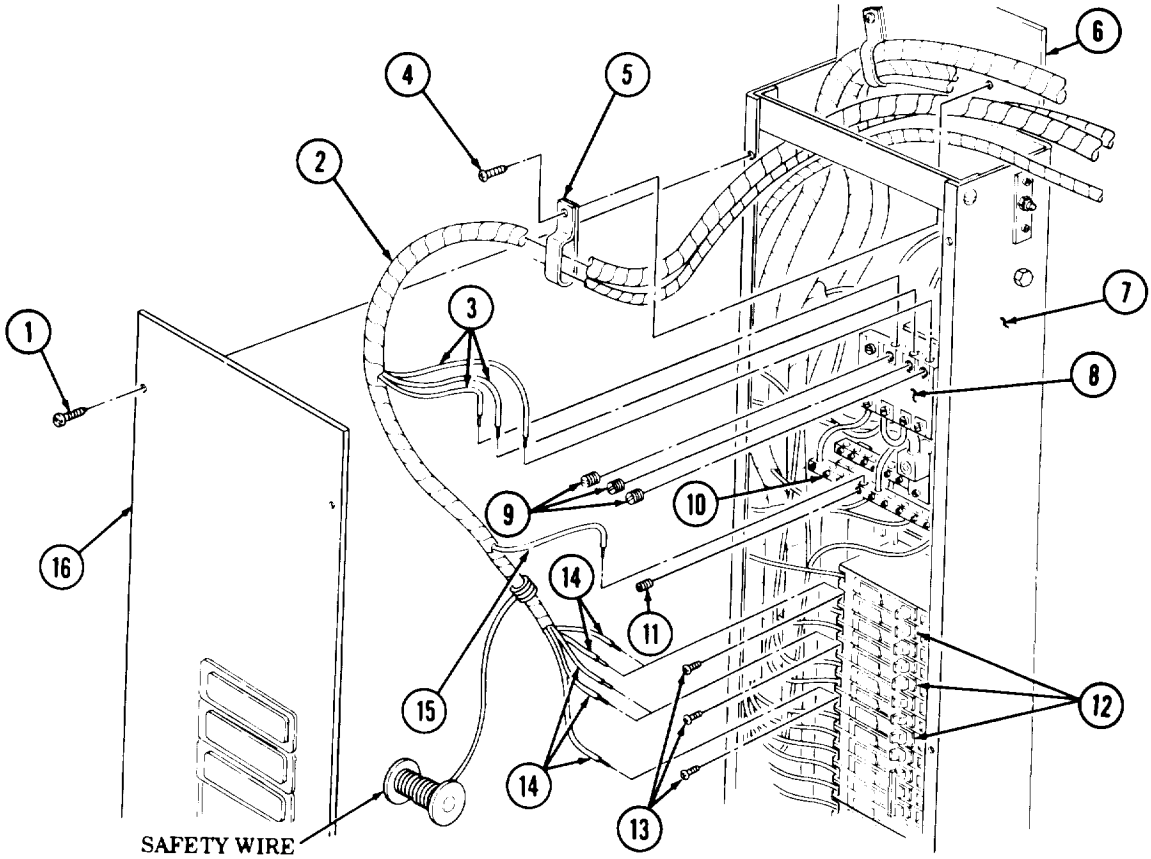

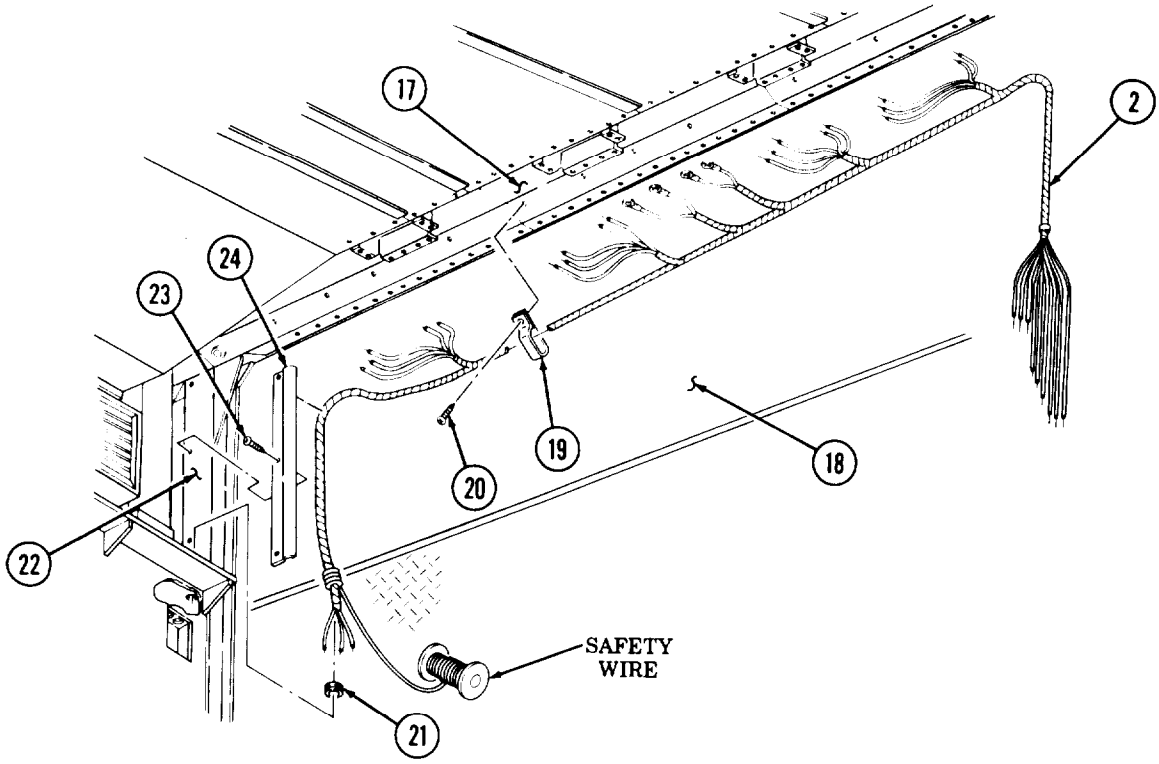

15-64. MAIN WIRING HARNESS REPLACEMENT (Contd)

b. Installation

1. Position main wiring harness (5) in van body (6). Ensure main wiring harness (5) is routed through grommet (9), twelve clamps (7), and clamp (14).
2. Install wire clip (3) on van side panel (1) with three screws (2).
3. Install grommet (9) in van side panel (1).
4. Secure main wiring harness (5) to van ceiling (4) with twelve clamps (7) and screws (8).
5. Install wire (23) in neutral bar (18) with setscrew (22).
6. Install three wires (12) in relay (17) with three setscrews (24).
7. Install five tires (21) in three 20-amp circuit breakers (19) with three screws (20).
8. Install clamp (14) on mounting plate (15) with screw (13).
9. Install cover (11) on load center (16) with six screws (10).

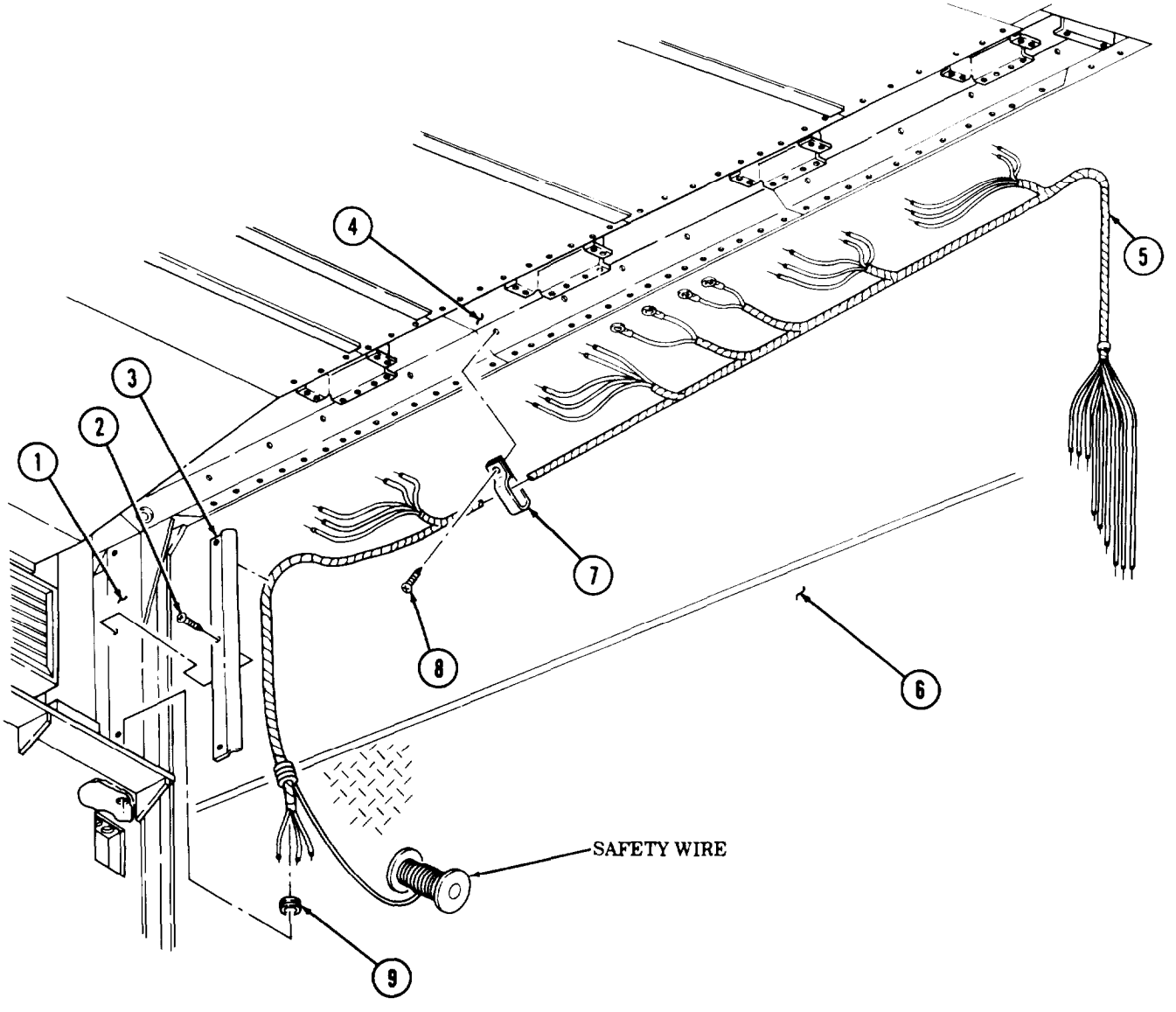

15-64. MAIN WIRING HARNESS REPLACEMENT (Contd)

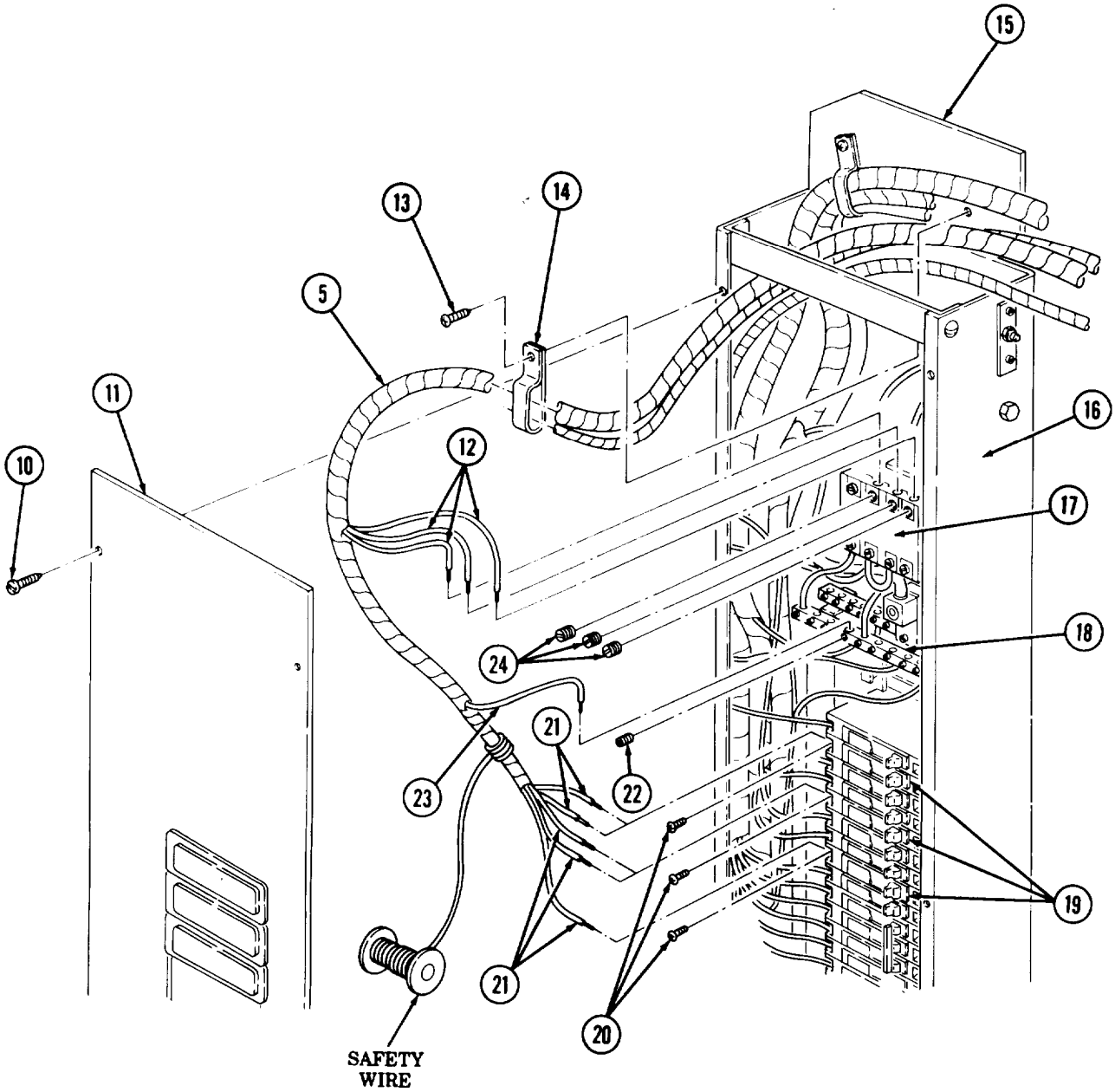

FOLLOW-ON TASKS:
- Install ceiling (M820A1) (para. 15-36).
- Install ceiling filler and side panels (M820, M820A2) (para. 15-44).
- Connect battery ground cable (TM 9-2320-260-20).
- Connect external power source (TM 9-2320-260-10).

15-65. AIR CONDITIONER WIRING HARNESS REPLACEMENT

THIS TASK COVERS:

a. Removal **b. Installation**

INITIAL SETUP

APPLICABLE MODELS
M820, M820A1, M820A2

TEST EQUIPMENT
Multimeter (Appendix B, Item 115)

TOOLS
General mechanic's tool kit (Appendix B, Item 1)
Tool kit, electrical (Appendix B, Item 106)

MATERIALS/PARTS
Two lockwashers (Appendix D, Item 248)
Safety wire (Appendix D, Item 372)
Electrical tape (Appendix C, Item 51)

REFERENCES (TM)
TM 9-2320-260-10
TM 9-2320-260-20
TM 9-2320 -260-34P-2

EQUIPMENT CONDITION
- External power source disconnected (TM 9-2320-260-10).
- Battery ground cable disconnected (TM 9-2320-260-20).
- Ceiling filler and side panels removed (M820, M820A2) (para. 15-44).
- Ceiling removed (M820A1) (para. 15-36).

CAUTION

Use care when replacing wiring harness. Excessive snagging or pulling may damage wiring harness.

a. Removal

NOTE

Tag wires, cables, and leads for installation.

1. Remove twelve screws (5) and clamps (6) from van ceiling (1).
2. Disconnect plug (2) from air conditioner (3).
3. Remove six screws (8) and cover (23) from load center (18).
4. Remove screw (9) and clamp (10) from mounting plate (13).
5. Remove nut (11), lockwasher (12), wires (22), (14), and (17), screw (16), and lockwasher (15) from load center (18). Discard lockwashers (12) and (15).
6. Remove three screws (20) and wires (21) from 40-amp circuit breaker (19).

NOTE

- Safety wire will be used to install new wiring harness. Do not cut safety wire from spool until wiring harness has been pulled through and proper length has been obtained.
- Safety wire must be attached to wires with electrical tape.

7. Remove air conditioner wiring harness (7) from van body (4).

15-65. AIR CONDITIONER WIRING HARNESS REPLACEMENT (Contd)

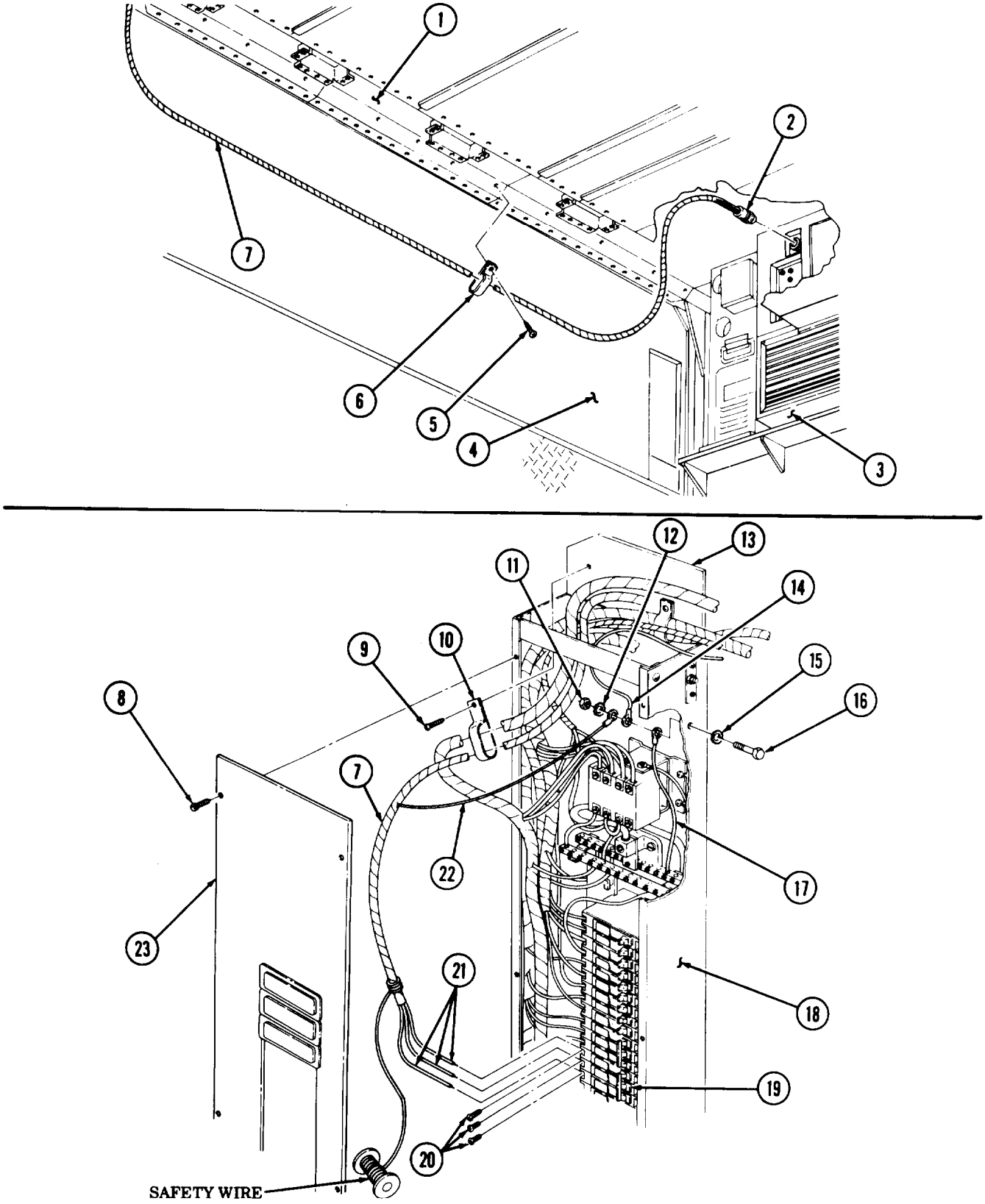

15-65. AIR CONDITIONER WIRING HARNESS REPLACEMENT (Contd)

b. Installation

1. Position air conditioner wiring harness (7) in van body (4). Ensure air conditioner wiring harness (7) is routed through twelve clamps (6) and clamp (11).
2. Install three wires (22) in 40-amp circuit breaker (20) with three screws (21).
3. Install wires (23), (15), and (18) in load center (19) with new lockwasher (16), screw (17), new lockwasher (13), and nut (12).
4. Install clamp (11) on mounting plate (14) with screw (10).
5. Install cover (9) on load center (19) with six screws (8).
6. Connect plug (2) to air conditioner (3).
7. Secure air conditioner wiring harness (7) to van ceiling (1) with twelve clamps (6) and screws (5)

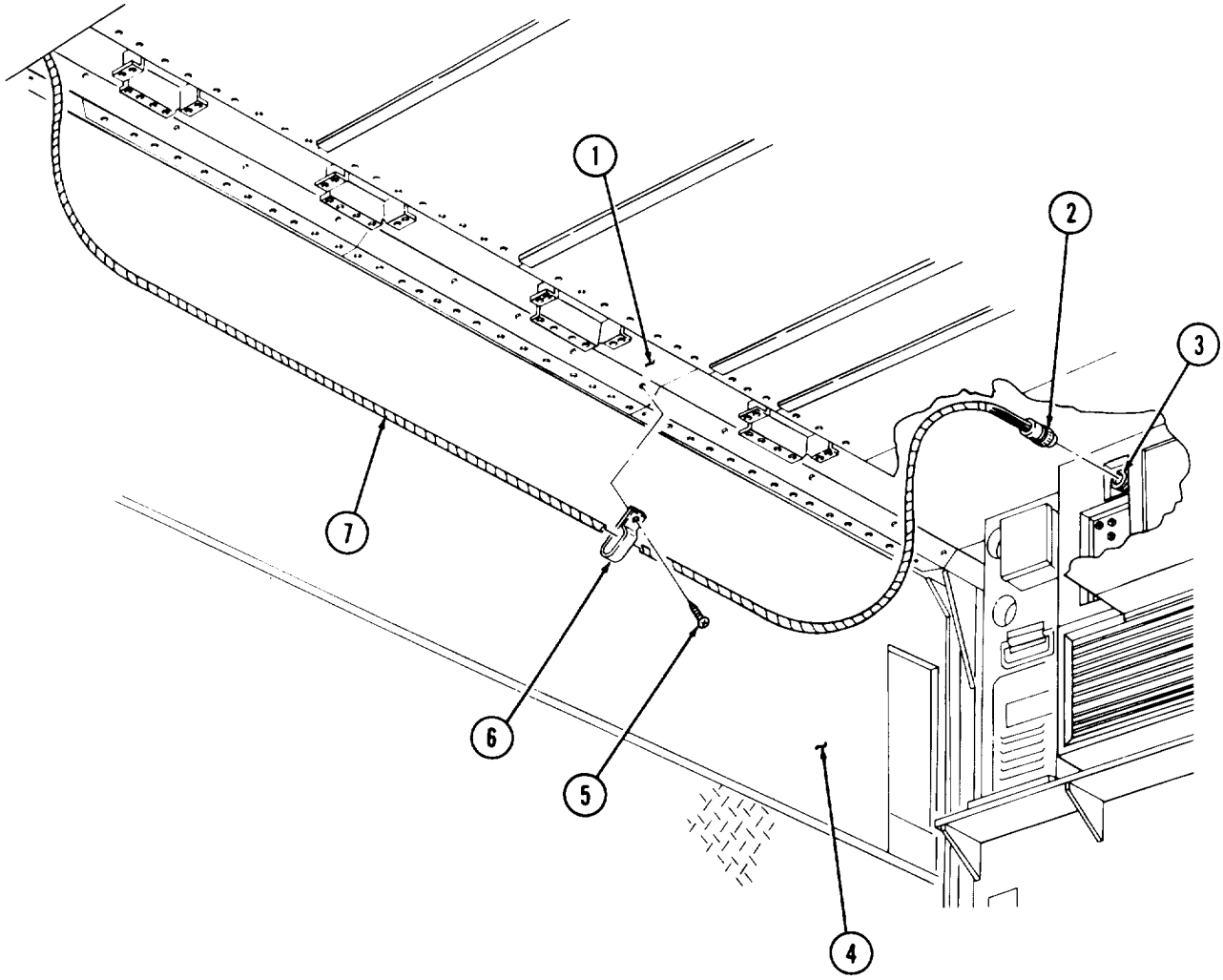

15-65. AIR CONDITIONER WIRING HARNESS REPLACEMENT (Contd)

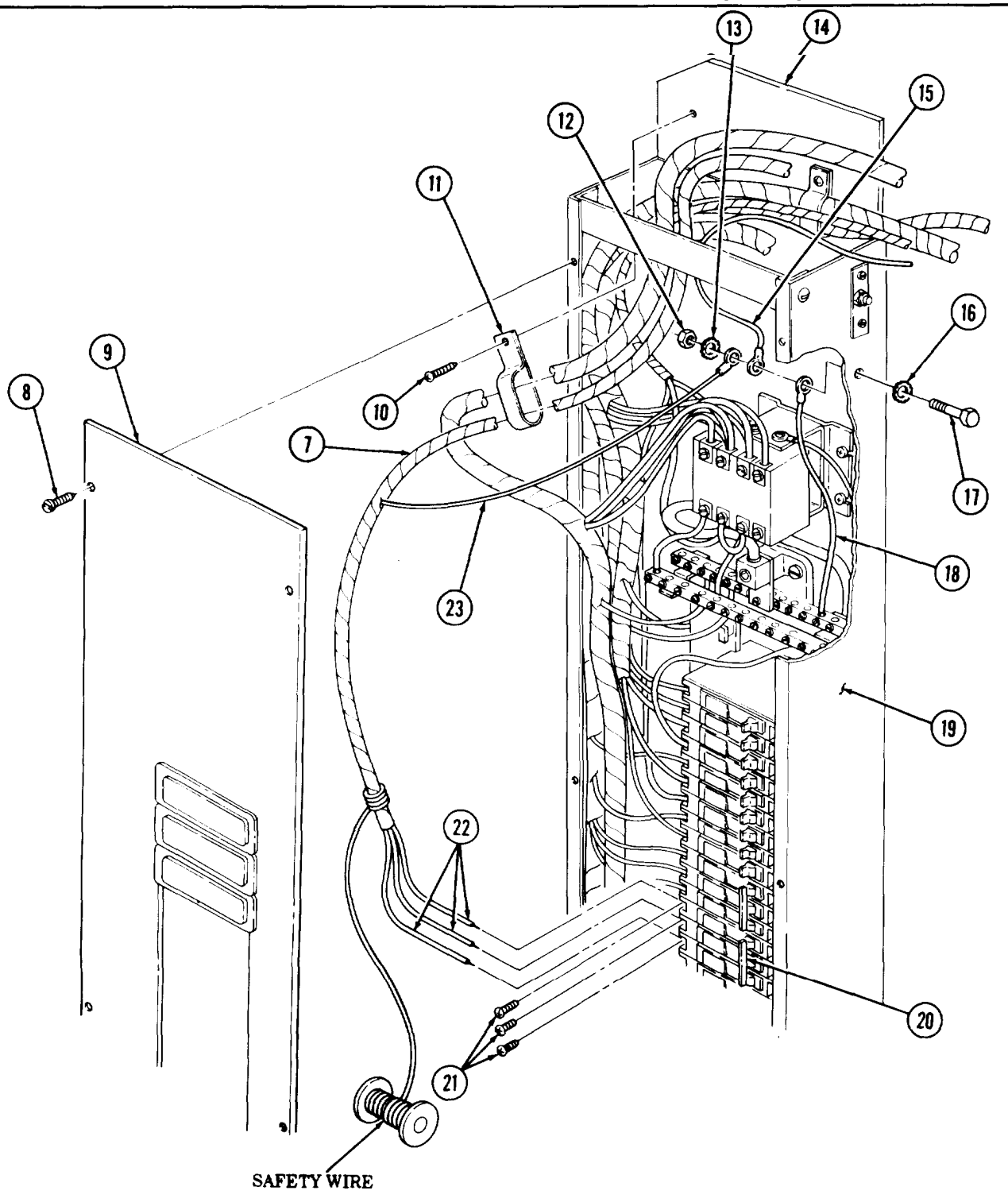

FOLLOW-ON TASKS:
- Install ceiling (M820A1) (para. 15-36).
- Install ceiling filler and side panels (M820, M820A2) (para. 15-44).
- Connect battery ground cable (TM 9-2320-260-20).
- Connect external power source (TM 9-2320-260-10).

15-66. HEATER WIRING HARNESS REPLACEMENT

THIS TASK COVERS:

a. Removal **b. Installation**

INITIAL SETUP

APPLICABLE MODELS
M820, M820A1, M820A2

TEST EQUIPMENT
Multimeter (Appendix B, Item 115)

TOOLS
General mechanic's tool kit (Appendix B, Item 1)
Tool kit, electrical (Appendix B, Item 106)

MATERIALS/PARTS
Safety wire (Appendix D, Item 372)
Electrical tape (Appendix C, Item 51)

REFERENCES (TM)
TM 9-2320-260-10
TM 9-2320-260-20
TM 9-2320 -260-34P-2

EQUIPMENT CONDITION
- External power source disconnected (TM 9-2320-260-10).
- Battery ground cable disconnected (TM 9-2320-260-20).
- Ceiling filler and side panels removed (M820, M820A2) (para. 15-44).
- Ceiling removed (M820A1) (para. 15-36).

CAUTION

Use care when replacing wiring harness. Excessive snagging or pulling may cause damage to wiring harness.

a. Removal

NOTE

Tag wires, cables, and leads for installation.

1. Remove twelve screws (5) and clamps (6) from van ceiling (1).
2. Disconnect two plugs (2) from heater (3).
3. Remove two grommets (4) from van ceiling (1).
4. Remove thermostat cover (12) from thermostat (10).
5. Remove two screws (11) from thermostat (10) and control center box (8). Pull thermostat (10) forward.
6. Remove two screws (13) and wires (9) from thermostat (10) and remove thermostat (10) from control center box (8).
7. Remove six screws (14) and cover (15) from load center (20).
8. Remove screw (16) and clamp (17) from mounting plate (18).
9. Remove setscrew (24) and wire (25) from neutral bar (26).
10. Remove screw (22) and wire (23) from 20-amp circuit breaker (21).

NOTE

- Safety wire will be used to install new wiring harness. Do not cut safety wire from spool until wiring harness has been pulled through and proper length has been obtained.
- Safety wire must be attached to wires with electrical tape.

11. Remove heater wiring harness (7) from van body (19).

15-66. HEATER WIRING HARNESS REPLACEMENT (Contd)

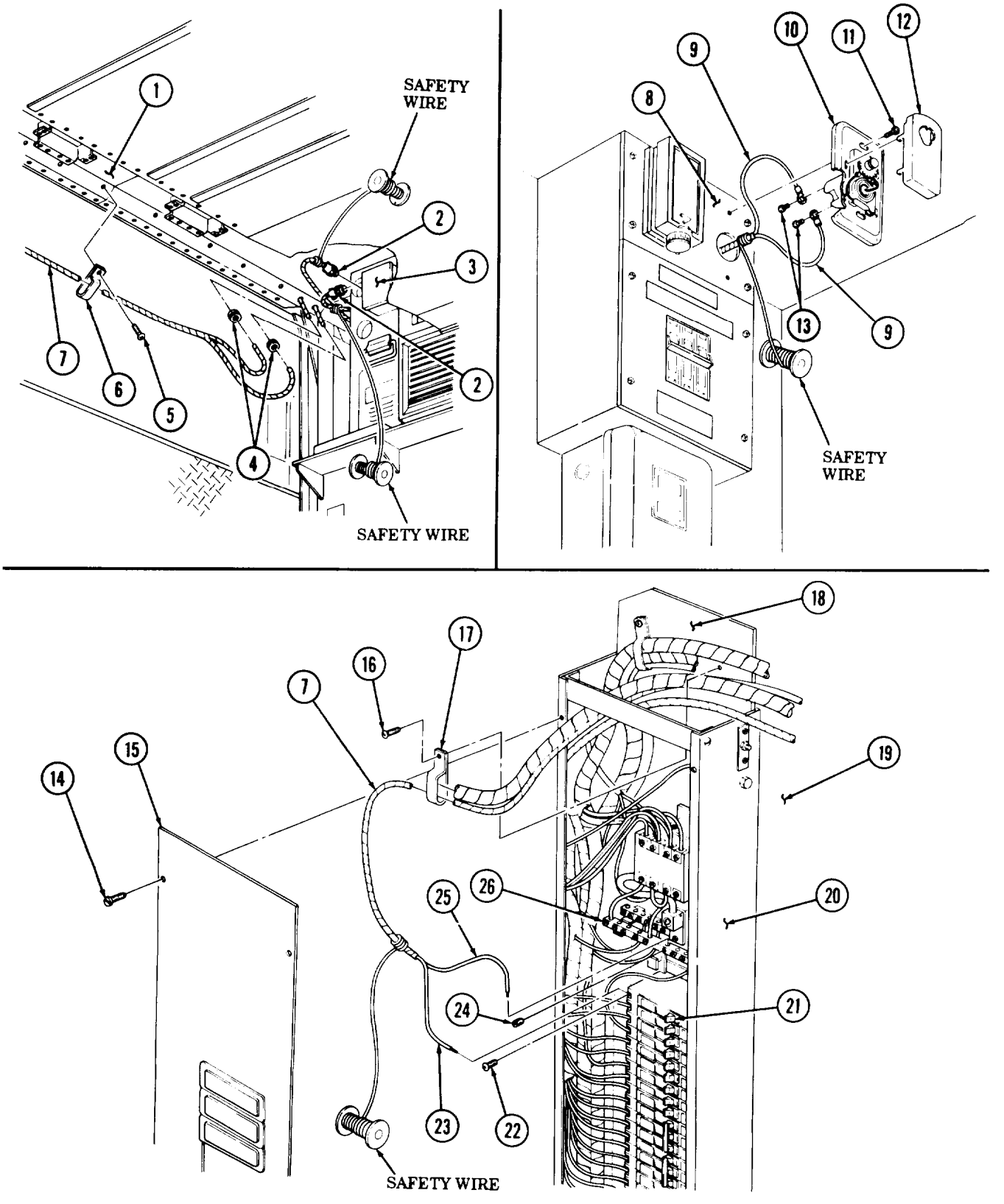

15-66. HEATER WIRING HARNESS REPLACEMENT (Contd)

b. Installation

1. Position heater wiring harness (3) in van body (7). Ensure heater wiring harness (3) is routed through clamp (5), twelve clamps (26), and two grommets (24).
2. Install wire (11) in 20-amp circuit breaker (9) with screw (10).
3. Install wire (13) in neutral bar (14) with setscrew (12).
4. Install clamp (5) on mounting plate (6) with screw (4).
5. Install cover (2) on load center (8) with six screws (1).
6. Install two wires (16) on thermostat (17) with two screws (20).
7. Install thermostat (17) on control center box (15) with two screws (18).
8. Install thermostat cover (19) on thermostat (17).
9. Install two grommets (24) in van ceiling (21).
10. Connect two plugs (22) to heater (23).
11. Secure heater wiring harness (3) to van ceiling (21) with twelve clamps (26) and screws (25).

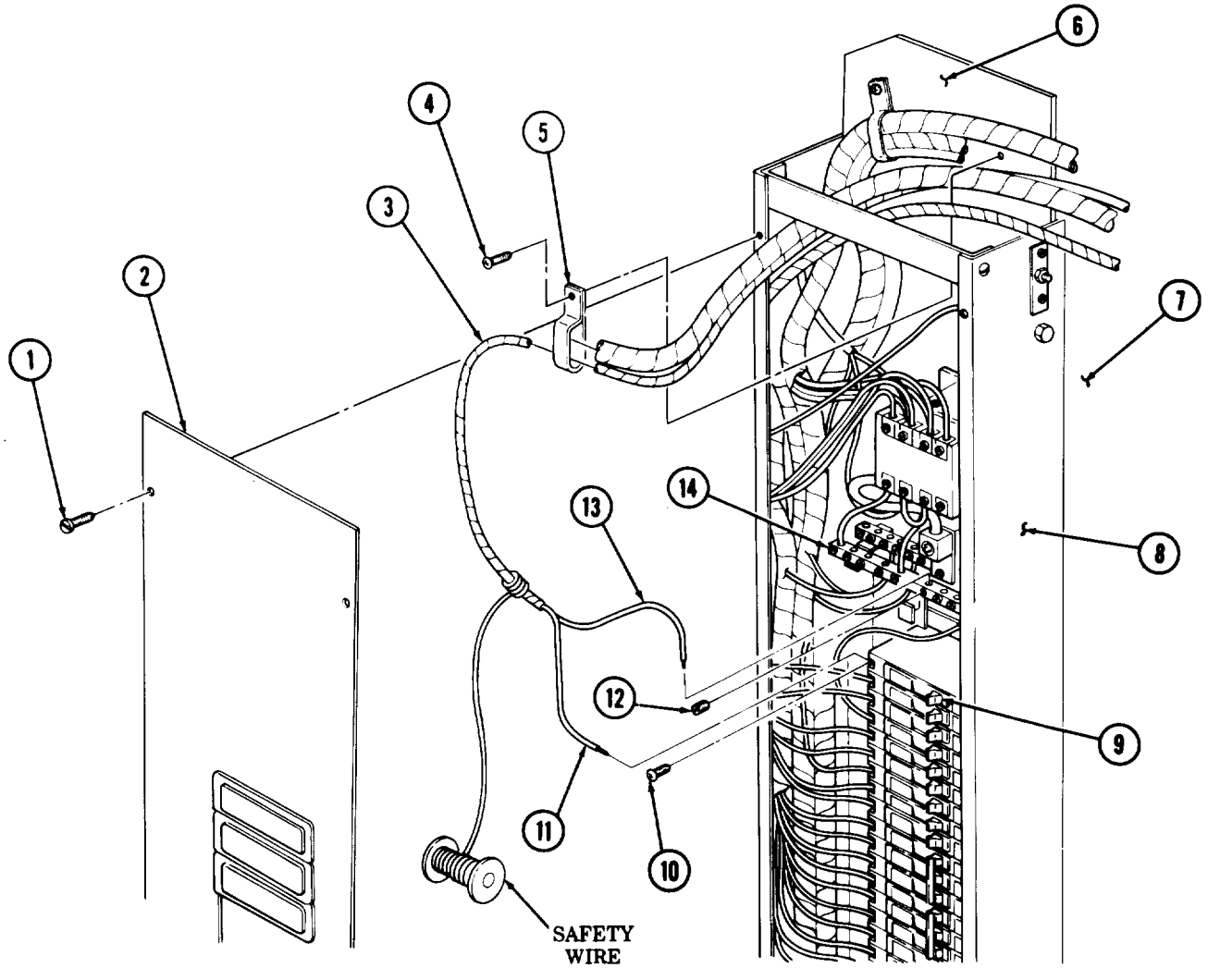

15-66. HEATER WIRING HARNESS REPLACEMENT (Contd)

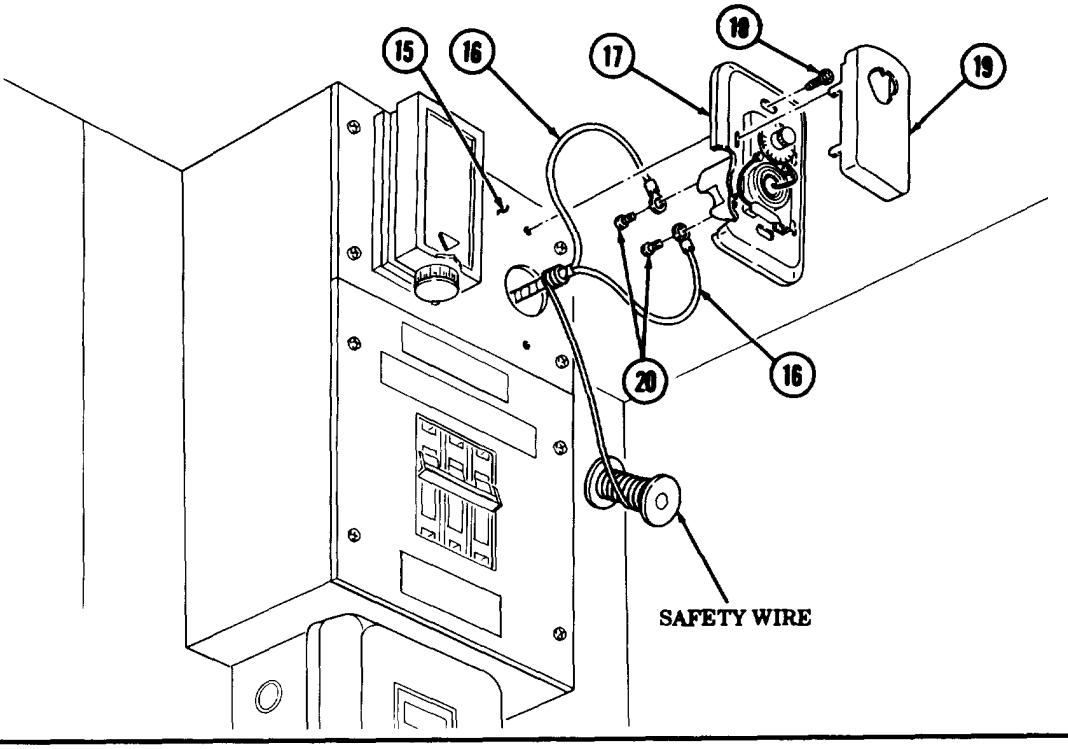

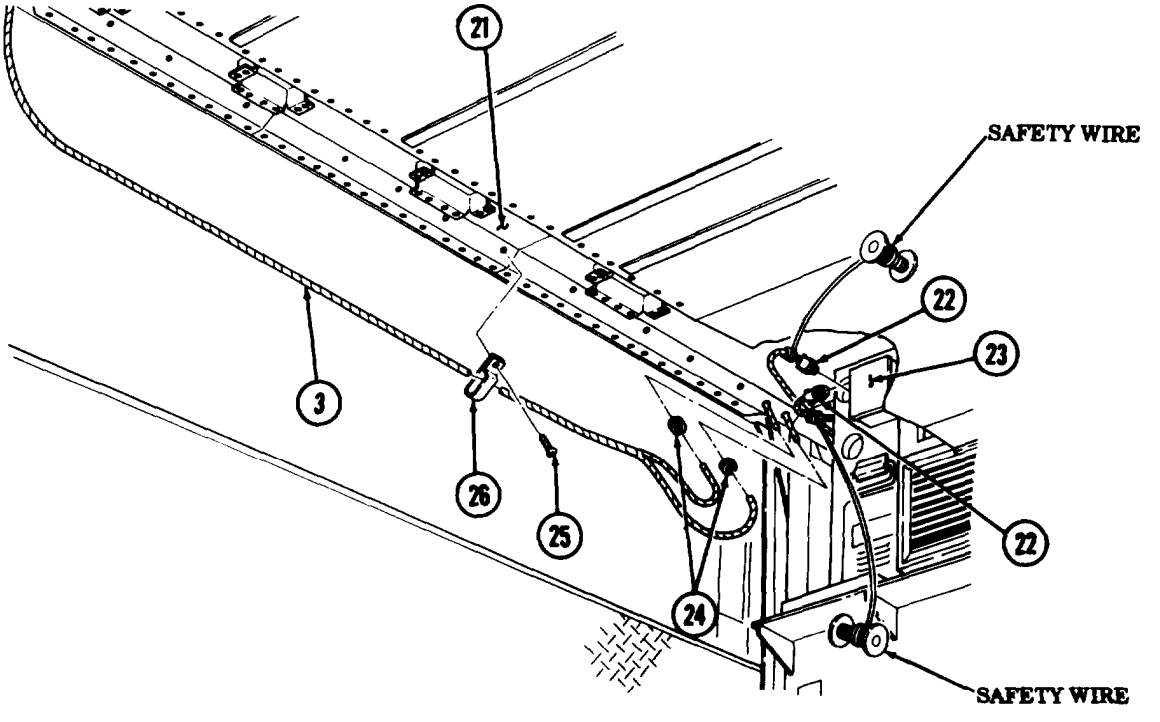

FOLLOW-ON TASKS:
- Install ceiling (M820A1) (para. 15-36).
- Install ceiling filler and side panels (M820, M820A2) (para. 15-44).
- Connect battery ground cable (TM 9-2320-260-20.
- Connect external power source (TM 9-2320-260-10).

15-67. ELECTRIC HEATER (10 kW) WIRING HARNESS REPLACEMENT

THIS TASK COVERS:

a. Removal **b. Installation**

INITIAL SETUP

APPLICABLE MODELS
M820, M820A1, M820A2

TEST EQUIPMENT
Multimeter (Appendix B, Item 115)

TOOLS
General mechanic's tool kit (Appendix B, Item 1)
Tool kit, electrical (Appendix B, Item 106)

MATERIALS/PARTS
Safety wire (Appendix D, Item 372)
Electrical tape (Appendix C, Item 51)
Three insulated wire splices (Appendix C, Item 49)

REFERENCES (TM)
TM 9-2320-260-10
TM 9-2320-260-20
TM 9-2320-260-34P-2

EQUIPMENT CONDITION
- External power source disconnected (TM 9-2320-260-10).
- Battery ground cable disconnected (TM 9-2320-260-20).
- Ceiling filler and side panels removed (M820, M820A2) (para. 15-44).
- Ceiling removed (M820A1) (para. 15-36).

CAUTION

Use care when replacing wiring harness. Excessive snagging or pulling may damage wiring harness.

a. Removal

NOTE

Tag wires, cables, and leads for installation.

1. Remove twelve screws (7) and clamps (6) from van ceiling (4).
2. Remove grommet (3) from van ceiling (4).
3. Disconnect wires (2) and (1) from electric heater (9).
4. Remove thermostat cover (16) from thermostat (14).
5. Remove two screws (15) from thermostat (14) and control center box (10).
6. Pull thermostat (14) forward, remove three insulated wire splices (12) from three wires (11) and wires (13), and remove thermostat (14) from control center box (10). Discard insulated wire splices (12).
7. Remove six screws (17) and cover (24) from load center (20).
8. Remove screw (18) and clamp (25) from mounting plate (19).
9. Remove setscrew (27) and wire (28) from neutral bar (26).
10. Remove three screws (22) and wires (23) from 30-amp circuit breaker (21).

NOTE

- Safety wire will be used to install new wiring harness. Do not cut safety wire from spool until wiring harness has been pulled through and proper length has been obtained.
- Safety wire must be attached to wires with electrical tape.

11. Remove electric heater wiring harness (5) from van body (8).

15-67. ELECTRIC HEATER (10 kW) WIRING HARNESS REPLACEMENT (Contd)

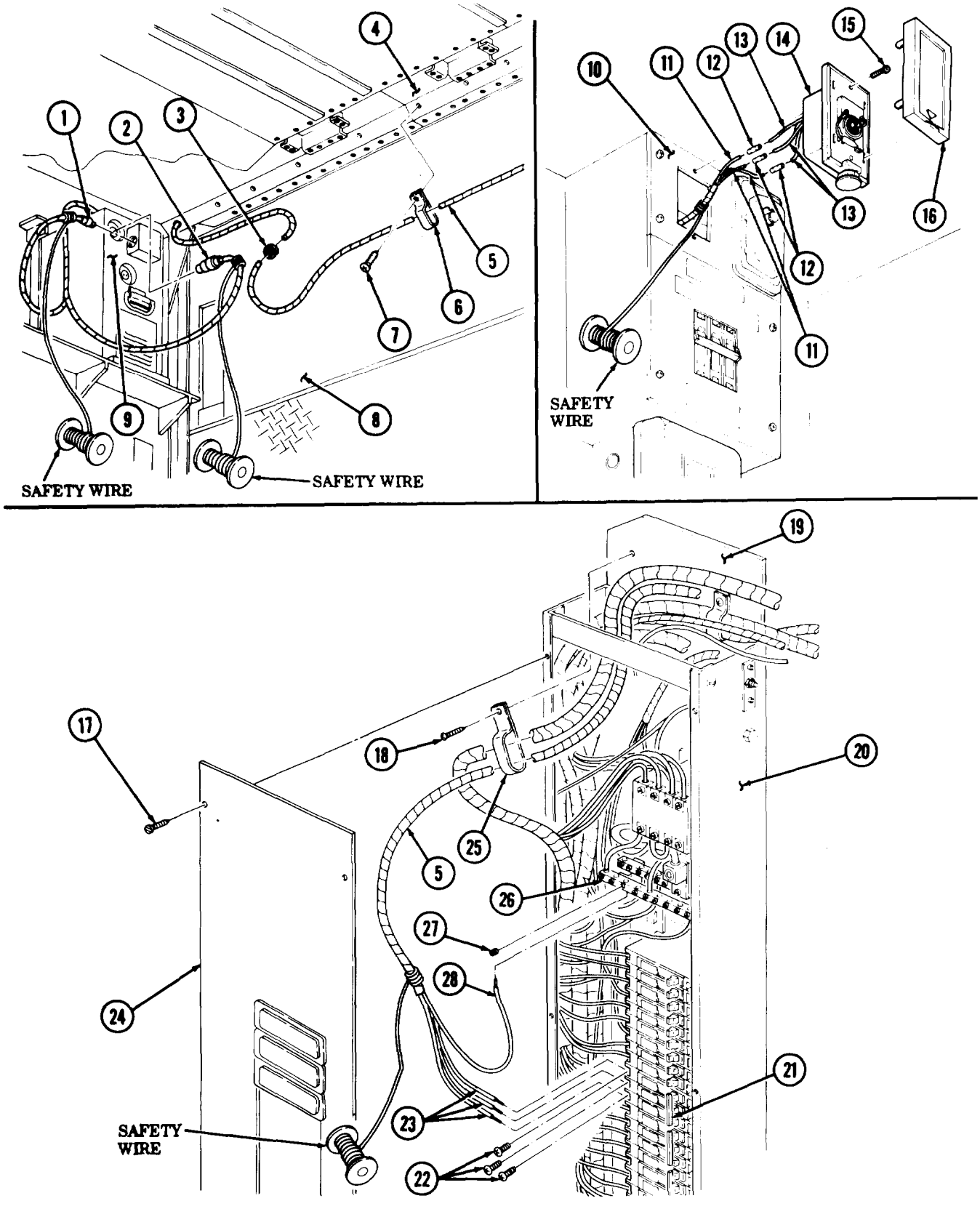

15-67. ELECTRIC HEATER (10 kW) WIRING HARNESS REPLACEMENT (Contd)

b. Installation

1. Position electric heater wiring harness (5) in van body (8). Ensure electric heater wiring harness (5) is routed through grommet (3), twelve clamps (6), and clamp (13).
2. Install clamp (13) on mounting plate (14) with screw (12).
3. Install three wires (19) in 30-amp circuit breaker (17) with three screws (18).
4. Install wire (20) in neutral bar (16) with setscrew (21).
5. Install cover (11) on load center (15) with six screws (10).
6. Connect three wires (23) to three wires (25) with three new insulated wire splices (24).
7. Install thermostat (26) on control center box (22) with two screws (27).
8. Install cover (28) on thermostat (26).
9. Connect wires (1) and (2) to electric heater (9).
10. Install grommet (3) in van ceiling (4).
11. Secure electric heater wiring harness (5) to van ceiling (4) with twelve clamps (6) and screws (7).

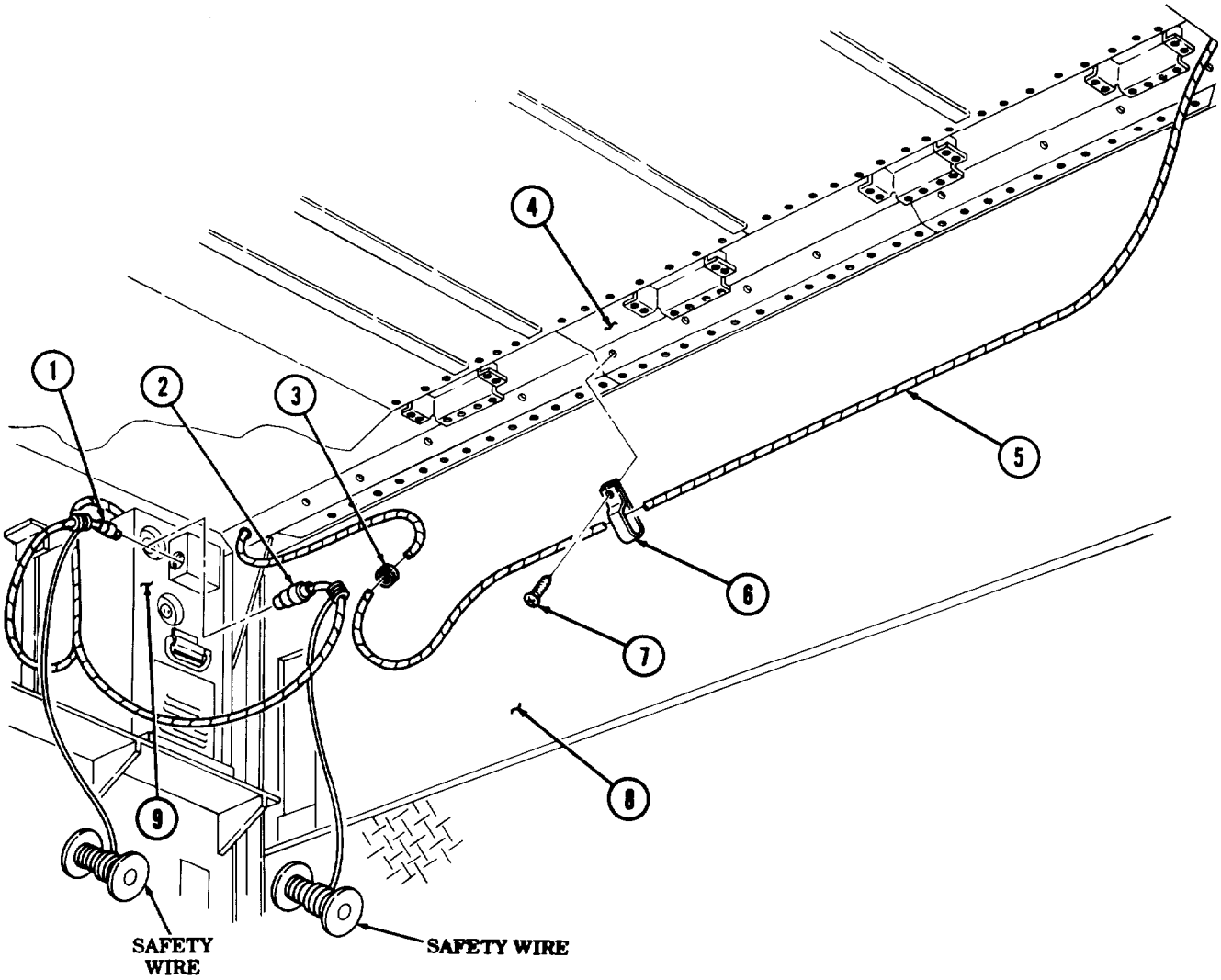

15-67. ELECTRIC HEATER (10 kW) WIRING HARNESS REPLACEMENT (Contd)

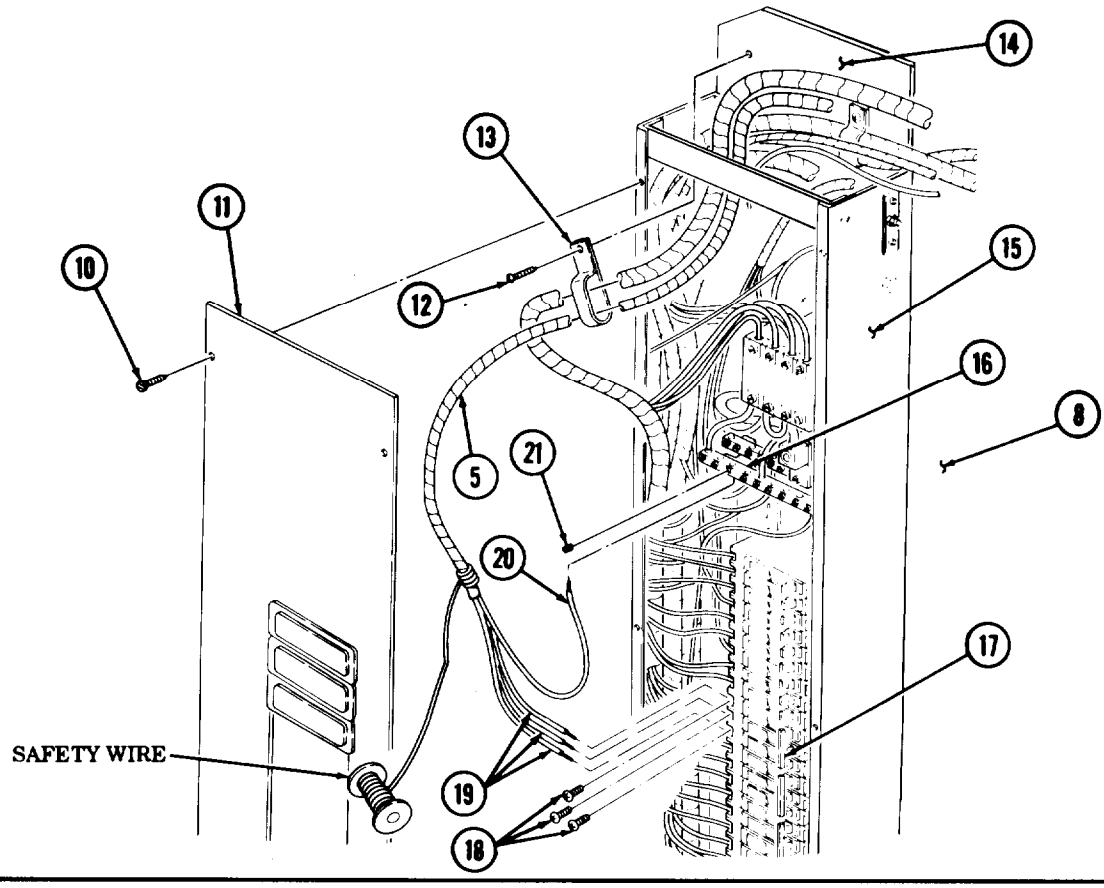

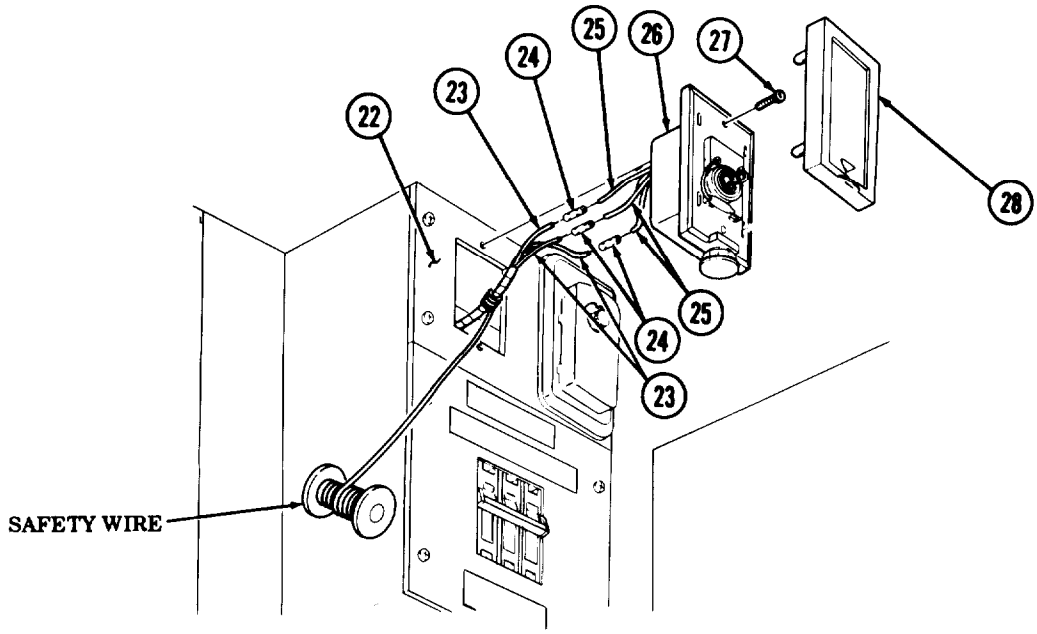

FOLLOW-ON TASKS:
- Install ceiling (M820A1) (para. 15-36).
- Install ceiling filler and side panels (M820, M820A2) (para. 15-44).
- Connect battery ground cable (TM 9-2320-260-20).
- Connect external power source (TM 9-2320-260-10).

15-68. HEATER FUEL PUMP WIRING HARNESS REPLACEMENT

THIS TASK COVERS:

a. Removal **b. Installation**

INITIAL SETUP

APPLICABLE MODELS
M820, M820A1, M820A2

TEST EQUIPMENT
Multimeter (Appendix B, Item 115)

TOOLS
General mechanic's tool kit (Appendix B, Item 1)
Toolkit, electrical (Appendix B, Item 106)

MATERIALS/PARTS
Safety wire (Appendix D, Item 372)
Electrical tape (Appendix C, Item 51)

REFERENCES (TM)
TM 9-2320-260-10
TM 9-2320-260-20
TM 9-2320-260-34P-2

EQUIPMENT CONDITION
- External power source disconnected (TM 9-2320-260-10).
- Battery ground cable disconnected (TM 9-2320-260-20).

CAUTION

Use care when replacing wiring harness. Excessive snagging or pulling may damage wiring harness.

a. Removal

NOTE

Tag wires, cables, and leads for installation.

1. Disconnect heater fuel pump wiring harness (1) from fuel pump plug (2).

NOTE

Perform step 2 for M820A2 vehicles.

2. Remove screw (3) and clamp (5) from van body (4).
3. Disconnect heater fuel pump wiring harness (1) from heater plug (6).

NOTE

- Safety wire will be used to install new wiring harness. Do not cut safety wire from spool until wiring harness has been pulled through and proper length has been obtained.
- Safety wire must be attached to wires with electrical tape.

4. Remove heater fuel pump wiring harness (1) from van body (4).

b. Installation

1. Position heater fuel pump wiring harness (1) in van body (4).
2. Connect heater fuel pump wiring harness (1) to heater plug (6).

NOTE

Perform step 3 for M820 and M820A1 vehicles. Perform steps 4 and 5 for M820A2 vehicles.

3. Connect heater fuel pump wiring harness (1) to fuel pump plug (2).
4. Route heater fuel pump wiring harness (1) through clamp (5) and connect heater fuel pump wiring harness (1) to fuel pump plug (2).
5. Secure heater fuel pump wiring harness (1) to van body (4) with clamp (5) and screw (3).

15-68. HEATER FUEL PUMP WIRING HARNESS REPLACEMENT (Contd)

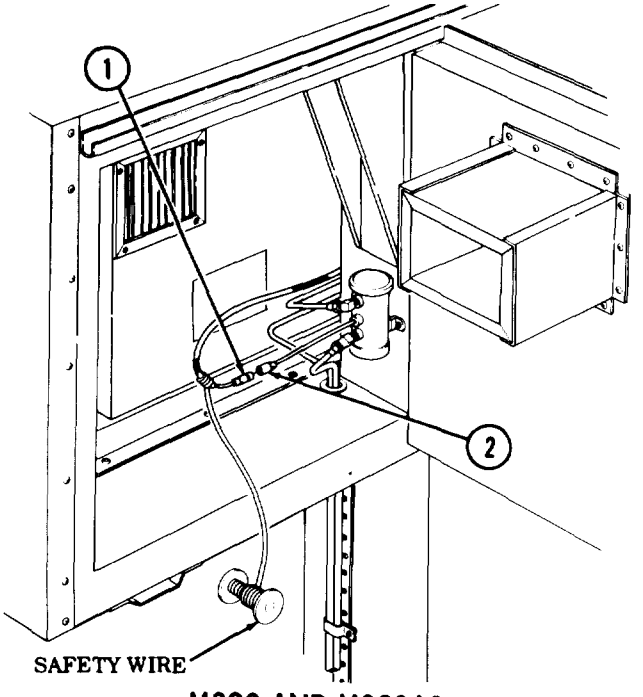

M820 AND M820A1

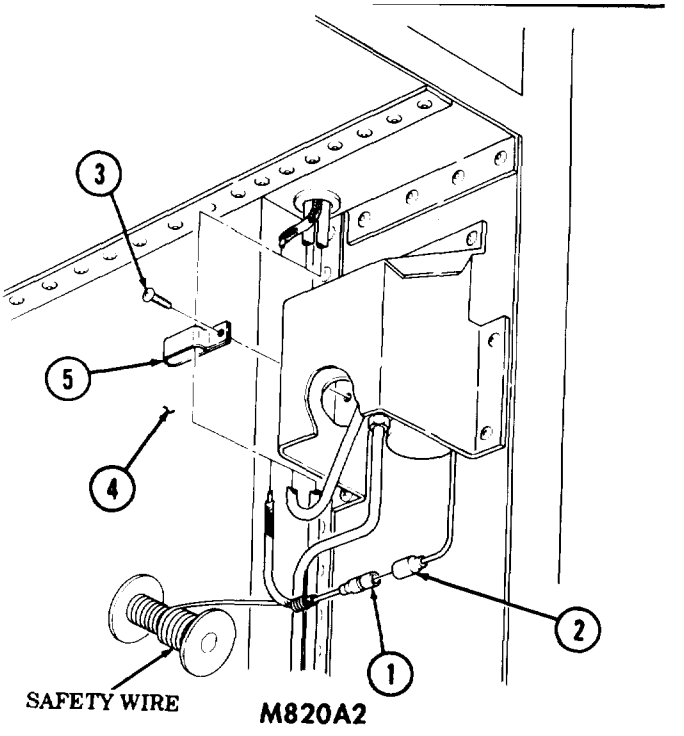

M820A2

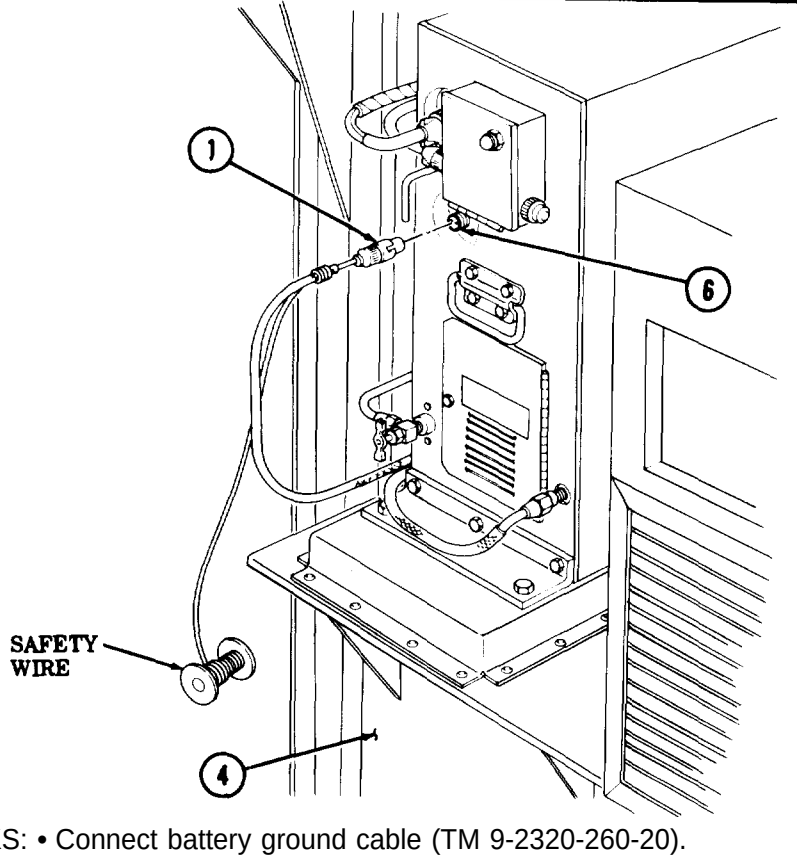

FOLLOW-ON TASKS: • Connect battery ground cable (TM 9-2320-260-20).
• Connect external power source (TM 9-2320-260-10).

15-69. CIRCUIT BREAKER HARNESS AND CIRCUIT BREAKER REPLACEMENT

THIS TASK COVERS:

a. Circuit Breaker Harness Removal
b. Circuit Breaker Harness Installation
c. Circuit Breaker Removal
d. Circuit Breaker Installation

INITIAL SETUP

APPLICABLE MODELS
M820, M820A1, M820A2

TEST EQUIPMENT
Multimeter (Appendix B, Item 115)

TOOLS
General mechanic's tool kit (Appendix B, Item 1)
Tool kit, electrical (Appendix B, Item 106)

MATERIALS/PARTS
Locknut (Appendix D, Item 167)
Locknut (Appendix D, Item 191)
Lockwasher (Appendix D, Item 224)

REFERENCES (TM)
TM 9-2320-260-10
TM 9-2320-260-20
TM 9-2320-260-34P-2

EQUIPMENT CONDITION
- External power source disconnected (TM 9-2320-260-10).
- Battery ground cable disconnected (TM 9-2320-260-20).

a. Circuit Breaker Harness Removal

1. Disconnect connector (2) from circuit breaker (1).
2. Remove two screws (4) and clamps (3) from van body (15).
3. Remove locknut (10), screw (13), and clamp (14) from spare tire carrier mounting bracket (5). Discard locknut (10).
4. Remove locknut (6), screw (12), washer (11), circuit breaker harness (9), wire (8), and lockwasher (7) from spare tire carrier mounting bracket (5). Discard locknut (6) and lockwasher (7).
5. Remove circuit breaker harness (9) from van body (15).

b. Circuit Breaker Harness Installation

1. Install new lockwasher (7), wire (8), and circuit breaker harness (9) on spare tire carrier mounting bracket (5) with washer (11), screw (12), and new locknut (6).
2. Install clamp (14) on spare tire carrier mounting bracket (5) with screw (13) and new locknut (10).
3. Install two clamps (3) on van body (15) with two screws (4).
4. Connect connector (2) to circuit breaker (1).

c. Circuit Breaker Removal

1. Disconnect emergency lamp wiring harness (17) and circuit breaker harness (9) from circuit breaker (1).
2. Remove two screws (16) and circuit breaker (1) from van body (15).

d. Circuit Breaker Installation

1. Install circuit breaker (1) on van body (15) with two screws (16).
2. Connect emergency lamp wiring harness (17) and circuit breaker harness (9) to circuit breaker (1).

15-69. CIRCUIT BREAKER HARNESS AND CIRCUIT BREAKER REPLACEMENT (Contd)

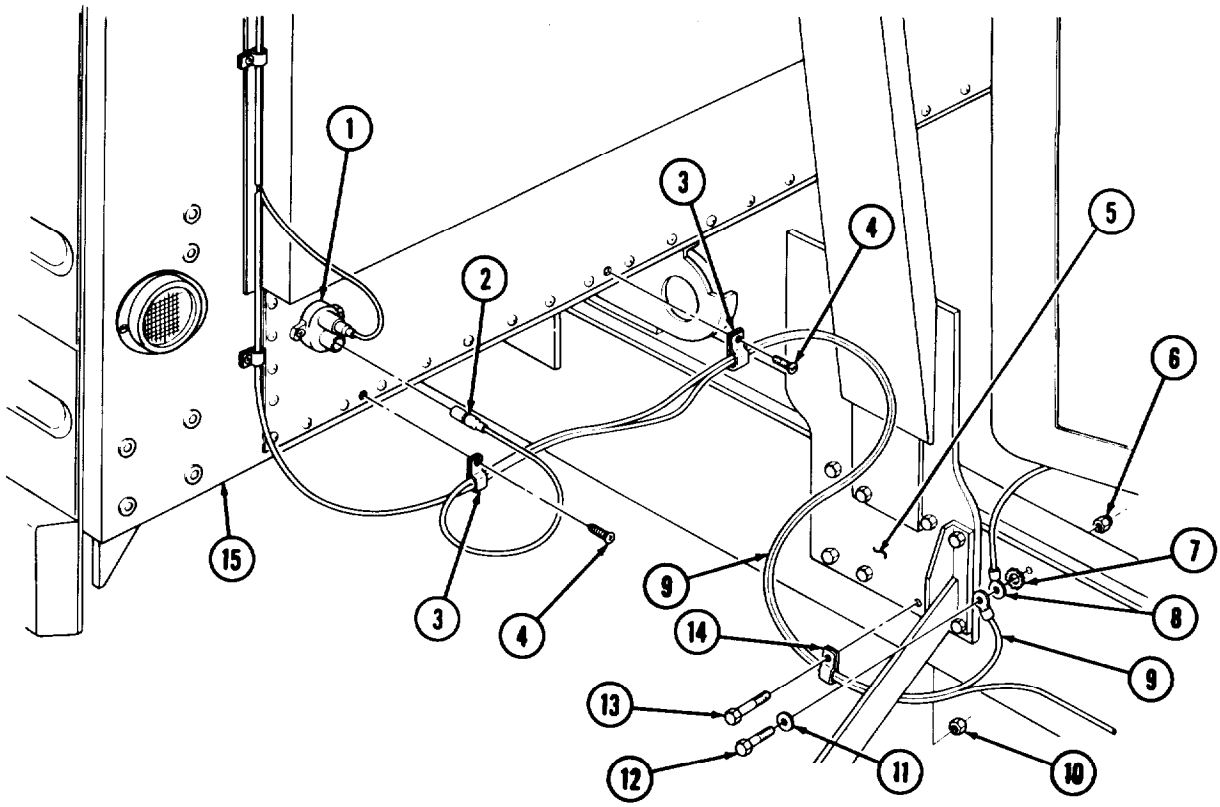

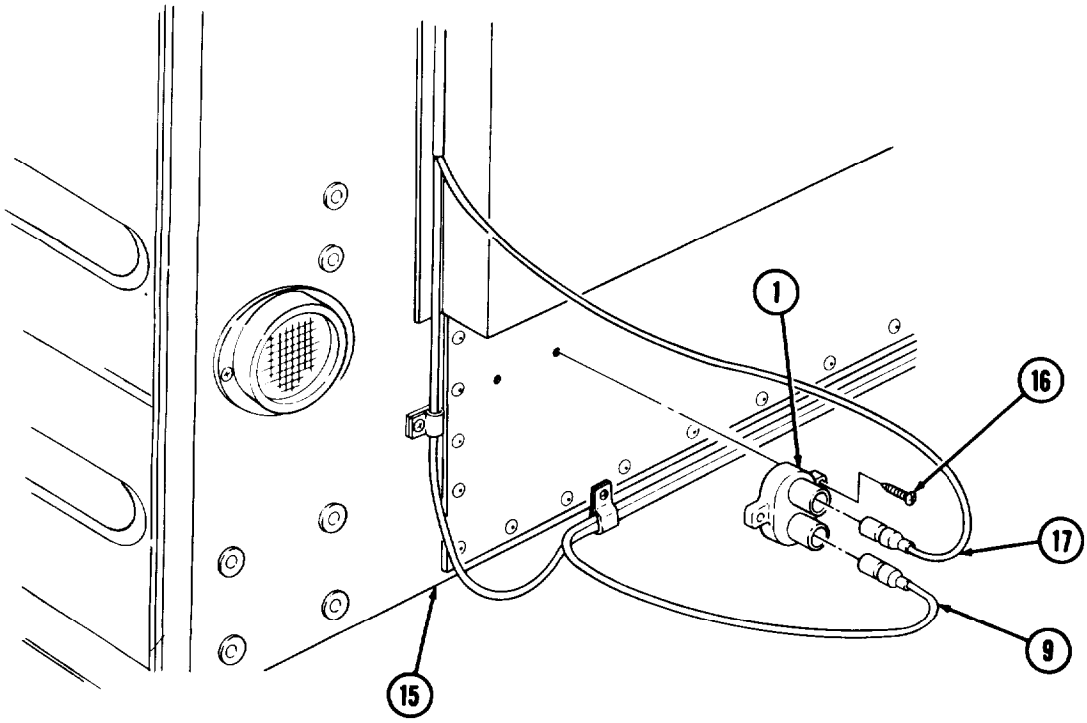

FOLLOW-ON TASKS: • Connect battery sound cable (TM 9-2320-260-20).
• Connect external power source (TM 9-2320-260-10).

15-70. BLACKOUT BYPASS WIRING HARNESS REPLACEMENT

THIS TASK COVERS:

a. Removal **b. Installation**

INITIAL SETUP

APPLICABLE MODELS
M820, M820A2

TEST EQUIPMENT
Multimeter (Appendix B, Item 115)

TOOLS
General mechanic's tool kit (Appendix B, Item 1)
Tool kit, electrical (Appendix B, Item 106)

MATERIALS/PARTS
Safety wire (Appendix D, Item 372)
Electrical tape (Appendix C, Item 51)

REFERENCES (TM)
TM 9-2320-260-10
TM 9-2320-260-20
TM 9-2320-260-34P-2

EQUIPMENT CONDITION
- External power source disconnected (TM 9-2320-260-10).
- Battery ground cable disconnected (TM 9-2320-260-20).

CAUTION

Use care when replacing wiring harness. Excessive snagging or pulling may damage wiring harness.

a. Removal

NOTE

Tag wires, cables, and leads for installation.

1. Remove six screws (1) and cover (2) from load center (6).
2. Remove two setscrews (10) and wires (3) from relay (5).
3. Remove screw (8) and wire (9) from 20-amp circuit breaker (7).
4. Remove two screws (16) and cover (15) from switch (13).
5. Remove two screws (14) and Pull switch (13) away from van body (11).
6. Loosen three screws (12), remove three wires (17) from switch (13), and remove switch (13) from van body (11).

NOTE

- Safety wire will be used to install new wiring harness. Do not cut safety wire from spool until wiring harness has been pulled through and proper length has been obtained.
- Safety wire must be attached to wires with electrical tape.

7. Remove blackout bypass wiring harness (4) from van body (11).

15-70. BLACKOUT BYPASS WIRING HARNESS REPLACEMENT (Contd)

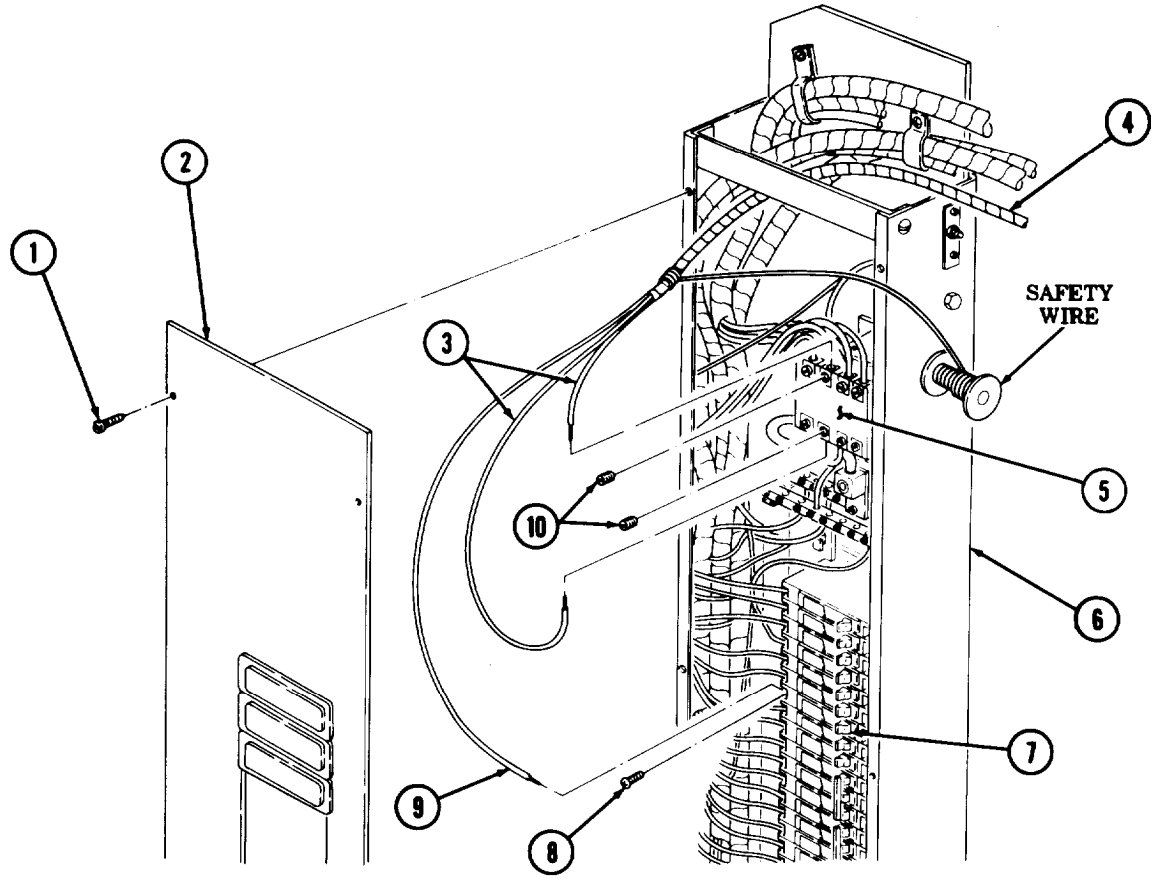

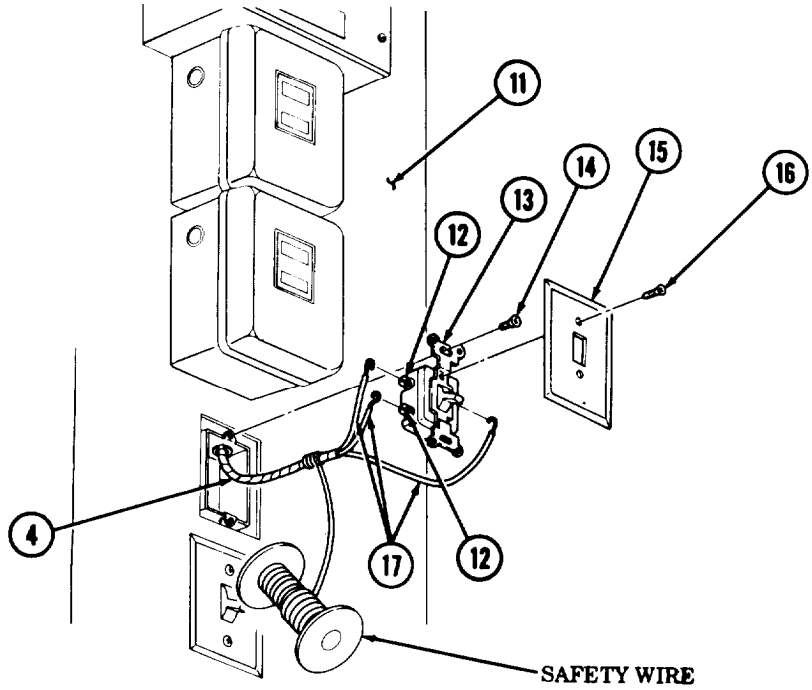

15-70. BLACKOUT BYPASS WIRING HARNESS REPLACEMENT (Contd)

b. Installation

1. Position blackout bypass wiring harness (8) in van body (1).
2. Install three wires (7) on switch (3) by tightening three screws (2).
3. Install switch (3) on van body (1) with two screws (4).
4. Install cover (5) on switch (3) with two screws (6).
5. Install wire (16) in 20-amp circuit breaker (14) with screw (15).
6. Install two wires (11) in relay (13) with two setscrews (17).
7. Install cover (10) on load center (12) with six screws (9).

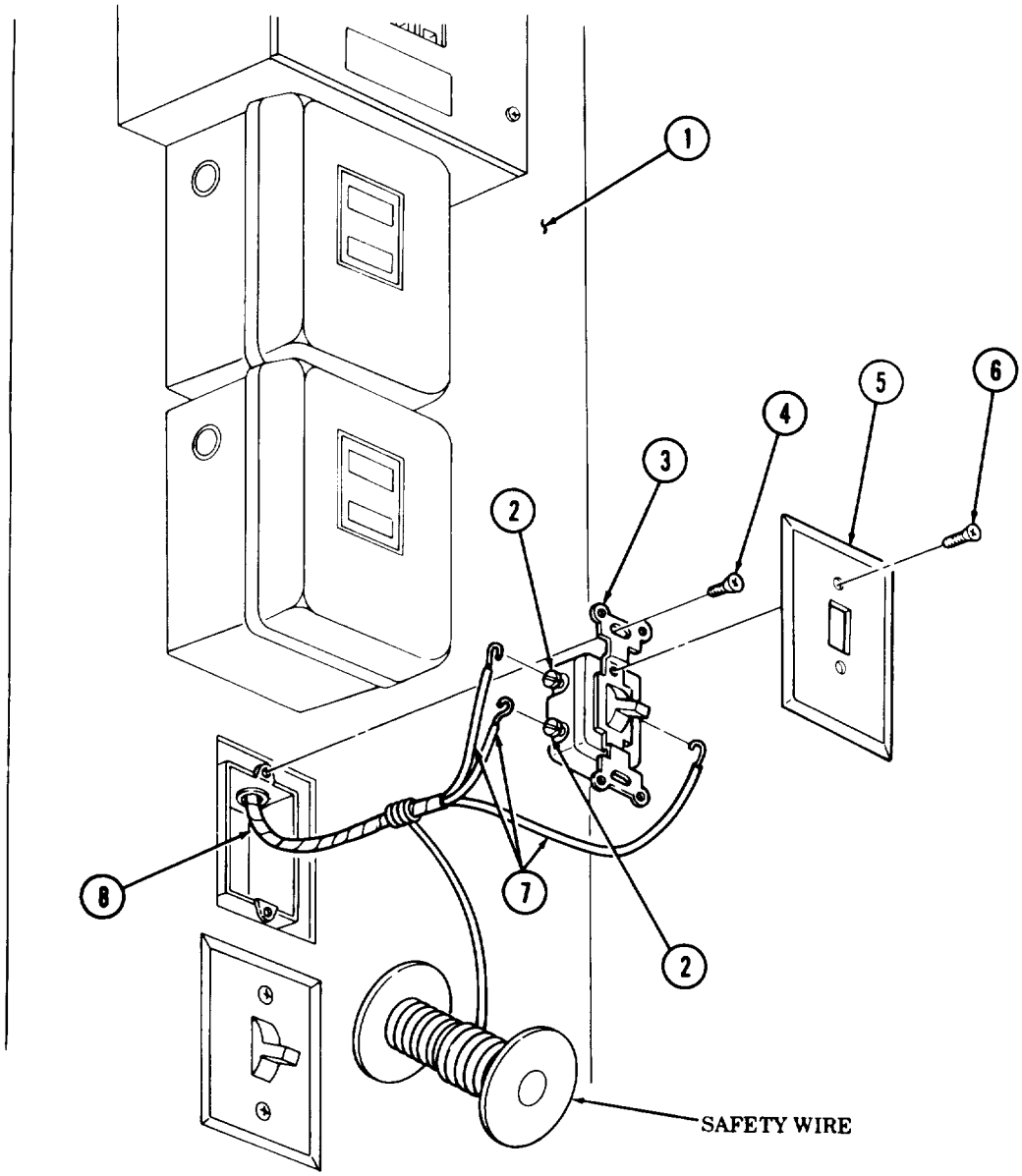

15-70. BLACKOUT BYPASS WIRING HARNESS REPLACEMENT (Contd)

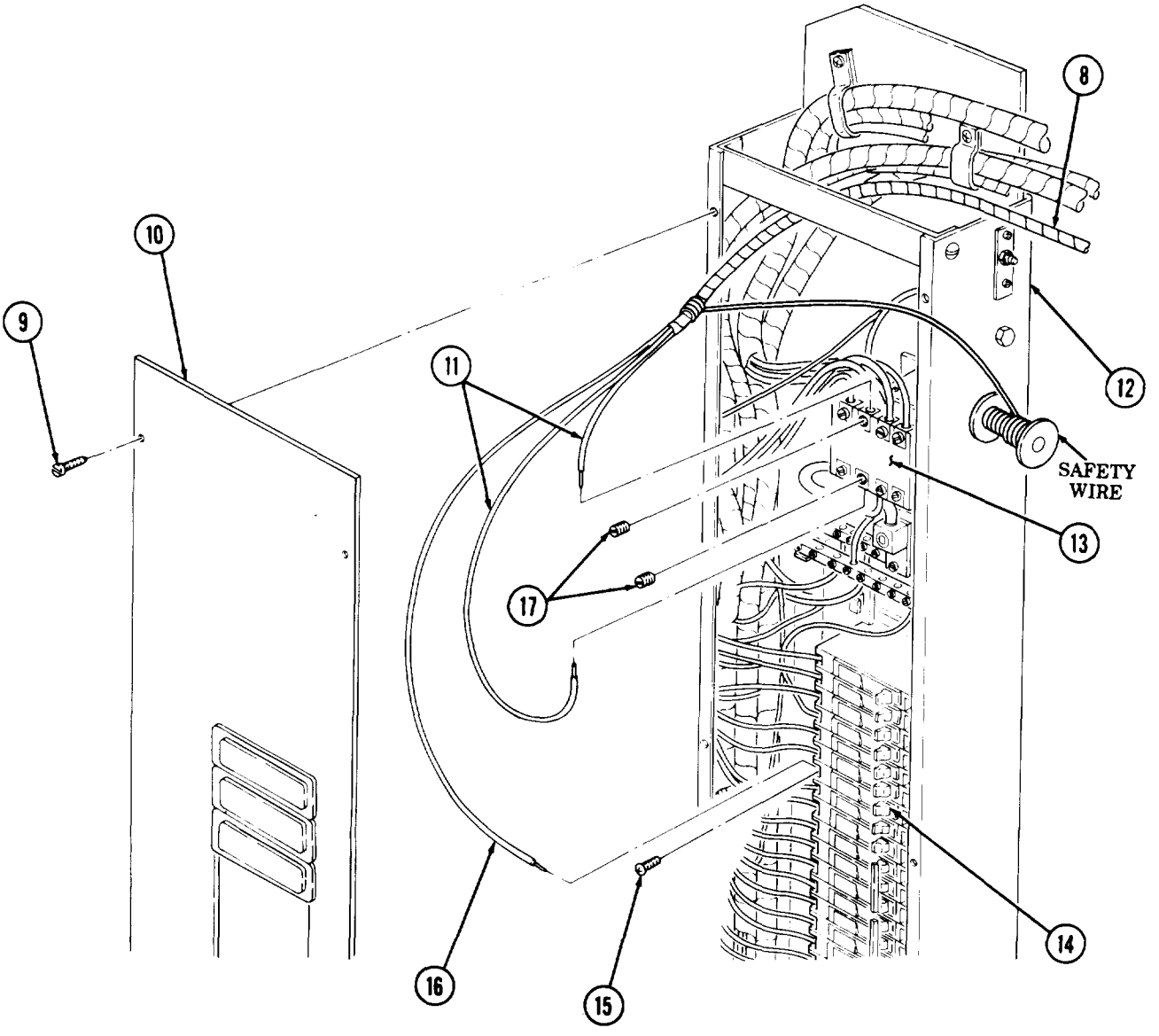

FOLLOW-ON TASKS: • Connect battery ground cable (TM 9-2320-260-20).
• Connect external power source (TM 9-2320-260-10).

15-71. BLACKOUT AND CLEARANCE LIGHT WIRING HARNESS REPLACEMENT

THIS TASK COVERS:

a. Removal **b. Installation**

INITIAL SETUP

APPLICABLE MODELS
M820, M820A1, M820A2

TEST EQUIPMENT
Multimeter (Appendix B, Item 115)

TOOLS
General mechanic's tool kit (Appendix B, Item 1)
Tool kit, electrical (Appendix B, Item 106)

MATERIALS/PARTS
Safety wire (Appendix D, Item 372)
Electrical tape (Appendix C, Item 51)

REFERENCES (TM)
TM 9-2320-260-10
TM 9-2320-260-20
TM 9-2320 -260-34P-2

EQUIPMENT CONDITION
- External power source disconnected (TM 9-2320-260-10).
- Battery ground cable disconnected (TM 9-2320-260-20).
- Ceiling filler and side panels removed (M820, M820A2) (para. 15-44).
- Ceiling removed (M820A1) (para. 15-36).
- Rear wall interior panel removed (para. 15-34).

CAUTION

Use care when replacing wiring harness. Excessive snagging or pulling may damage wiring harness.

a. Removal

NOTE

Tag wires, cables, and leads for installation.

1. Disconnect two wires (3) from two wires (4).
2. Remove two screws (5) and clamps (6) from van body (2) and wiring harness (7).
3. Remove grommet (1) from van body (2) and wiring harness (7).
4. Remove twelve screws (9) and clamps (10) from van ceiling (11).
5. Remove five screws (12) and clamps (13) from van ceiling (11) and wiring harness (7).
6. Remove four grommets (8) from van ceiling (11) and wiring harness (7).

NOTE

- Safety wire will be used to install new wiring harness. Do not cut safety wire from spool until wiring harness has been pulled through and proper length has been obtained.
- Safety wire must be attached to wires with electrical tape.

7. Remove wiring harness (7) from van body (2).

b. Installation

1. Position blackout and clearance light wiring harness (7) in van body (2). Ensure blackout and clearance light wiring harness (7) is routed through four grommets (8), twelve clamps (10), grommet (1), and two clamps (6).
2. Install four grommets (8) in van body (2).
3. Secure blackout and clearance light wiring harness (7) in van ceiling (11) with twelve clamps (10) and screws (9).
4. Install five clamps (13) on van ceiling (11) with five screws (12).
5. Install grommet (1) in van body (2).
6. Install two clamps (6) on van body (2) with two screws (5).
7. Connect two wires (3) to two wires (4).

15-71. BLACKOUT AND CLEARANCE LIGHT WIRING HARNESS REPLACEMENT (Contd)

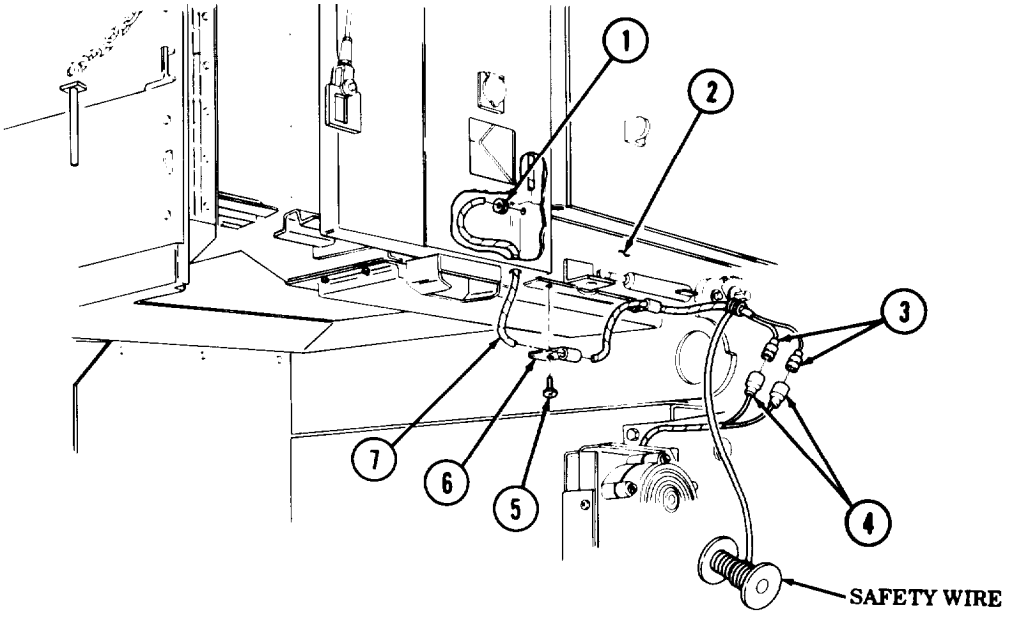

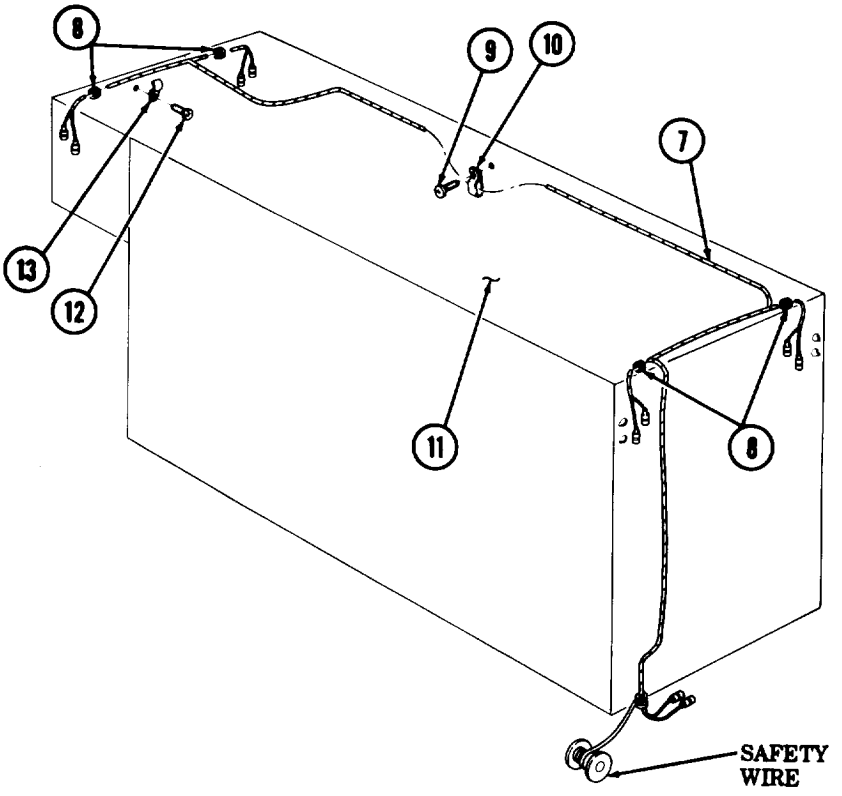

FOLLOW-ON TASKS:
- Install rear wall interior panel (para. 15-34).
- Install ceiling (M820A1) (para. 15-36).
- Install ceiling filler and side panels (M820, M820A2) (para. 15-44).
- Connect battery ground cable (TM 9-2320-260-20).
- Connect external power source (TM 9-2320-260-10).

15-72. RIGHT AND LEFT SIDE BLACKOUT WIRING HARNESS REPLACEMENT

THIS TASK COVERS:

a. Removal **b. Installation**

INITIAL SETUP

APPLICABLE MODELS
M820, M820A2

TEST EQUIPMENT
Multimeter (Appendix B, Item 115)

TOOLS
General mechanic's tool kit (Appendix B, Item 1)
Toolkit, electrical (Appendix B, Item 106)

MATERIALS/PARTS
Safety wire (Appendix D, Item 371)
Electrical tape (Appendix C, Item 51)

REFERENCES (TM)
TM 9-2320-260-10
TM 9-2320-260-20
TM 9-2320-260-34P-2

EQUIPMENT CONDITION
- External power source disconnected (TM 9-2320-260-10).
- Van body sides fully expanded and secured (TM 9-2320-260-10).
- Battery ground cable at frame disconnected (TM 9-2320-260-20).
- Hinged-roof operated blackout circuit plunger removed (TM 9-2320-260-20).

CAUTION

Use care when replacing wiring harness. Excessive snagging or pulling may damage wiring harness.

a. Removal

NOTE

Tag wires, cables, and leads for installation.

1. Remove six screws (22) and cover (21) from load center (16).

NOTE

Perform steps 2 and 3 for right side blackout wiring harness.

2. Remove screw (5) and wire (6) from rear door blackout switch (7).
3. Remove screw (10) and wire (11) from relay (12).

NOTE

Perform steps 4 and 5 for left side blackout wiring harness.

4. Remove screw (9) and wire (8) from rear door blackout switch (7).
5. Remove setscrew (14) and wire (13) from neutral bar (15).
6. Remove six screws (25) and cover (20) from van body (1). Pull cover (20) forward.
7. Remove nut (23) and connectors (19) and (18) from cover (20).
8. Remove nut (3) and connectors (2) and (1) from van body (1).
9. Remove two screws (17) and connector (18) from connector (19).
10. Remove two screws (26) and connector (27) from connector (2).
11. Remove grommet (4) from van body (1).

NOTE

- Safety wire will be used to install new wiring harness. Do not cut safety wire from spool until wiring harness has been pulled through and proper length has been obtained.
- Safety wire must be attached to wires with electrical tape.

12. Remove blackout wiring harness (24) from van body (1).

15-72. RIGHT AND LEFT SIDE BLACKOUT WIRING HARNESS REPLACEMENT (Contd)

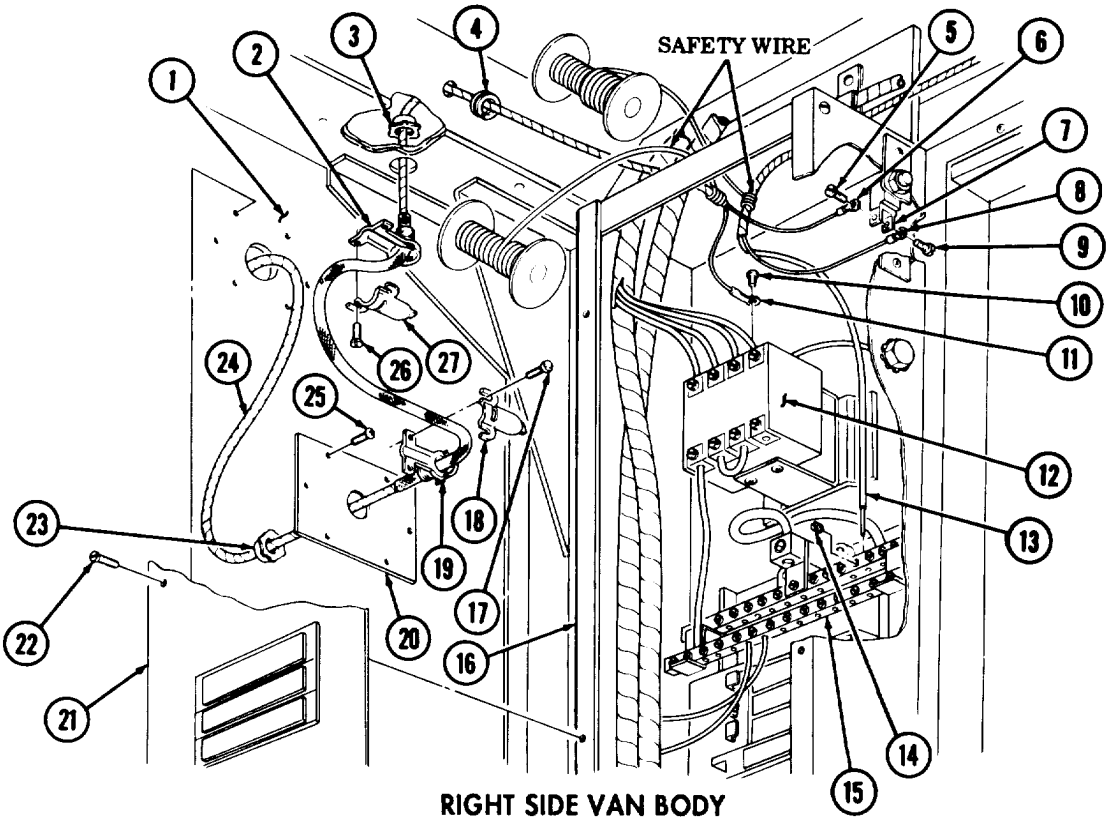

RIGHT SIDE VAN BODY

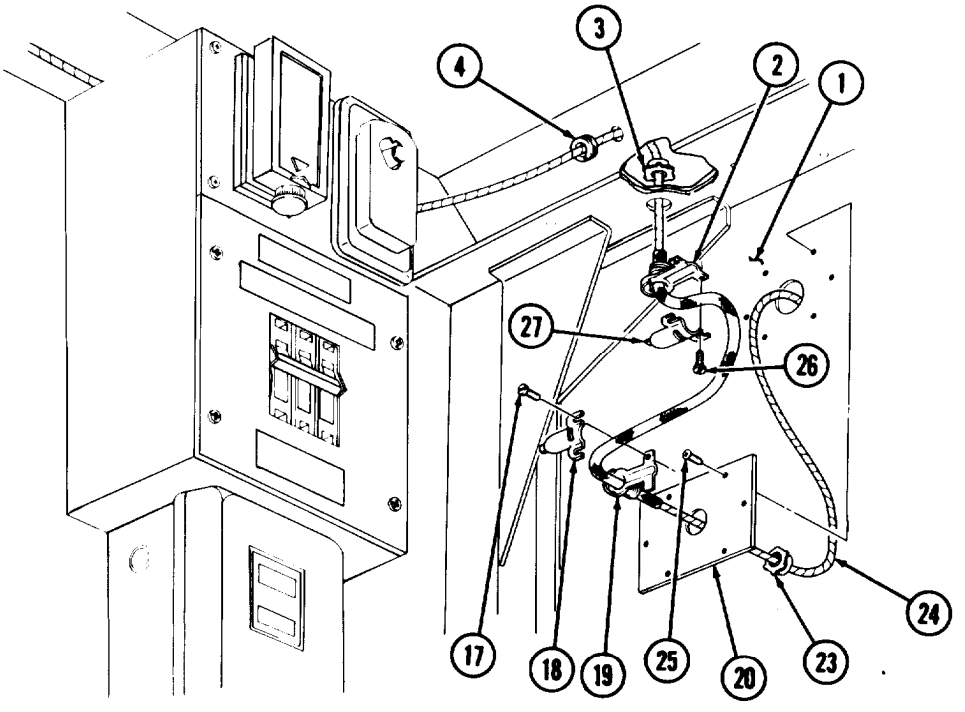

LEFT SIDE VAN BODY

15-72. RIGHT AND LEFT SIDE BLACKOUT WIRING HARNESS REPLACEMENT (Contd)

b. Installation

1. Position blackout wiring harness (24) in van body (1). Ensure blackout wiring harness (24) is routed through nuts (3) and (23), connectors (2) and (19), cover (20), and grommet (4).
2. Install connector (2) on van body (1) with nut (3) and install connector (27) on connector (2) with two screws (26).
3. Install connector (19) on cover (20) with nut (23).
4. Install cover (20) on van body (1) with six screws (25).
5. Install connector (18) on connector (19) with two screws (17).
6. Install grommet (4) in van body (1).

NOTE

Perform steps 7 and 8 for right side blackout wiring harness.

7. Install wire (11) on relay (12) with screw (10).
8. Install wire (6) on rear door blackout switch (7) with screw (5).

NOTE

Perform steps 9 and 10 for left side blackout wiring harness.

9. Install wire (13) on neutral bar (15) with setscrew (14).
10. Install wire (8) on rear door blackout switch (7) with screw (9).
11. Install cover (21) on load center (16) with six screws (22).

15-72. RIGHT AND LEFT SIDE BLACKOUT WIRING HARNESS REPLACEMENT (Contd)

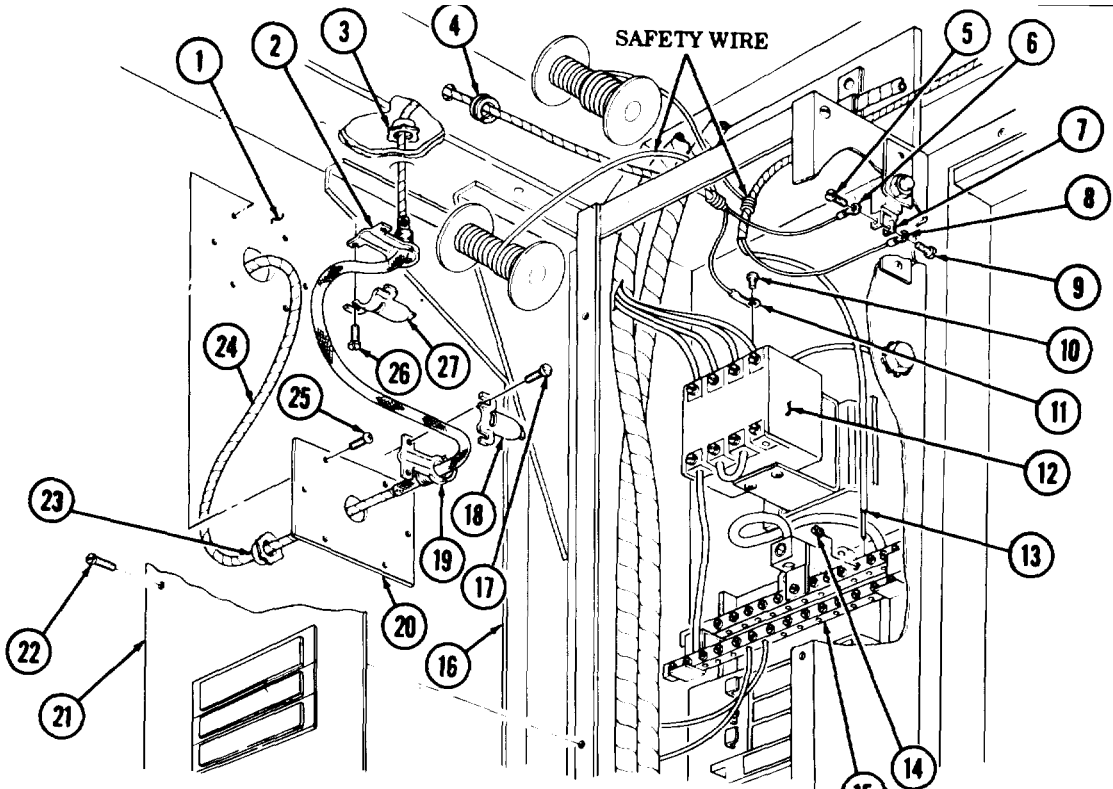

RIGHT SIDE VAN BODY

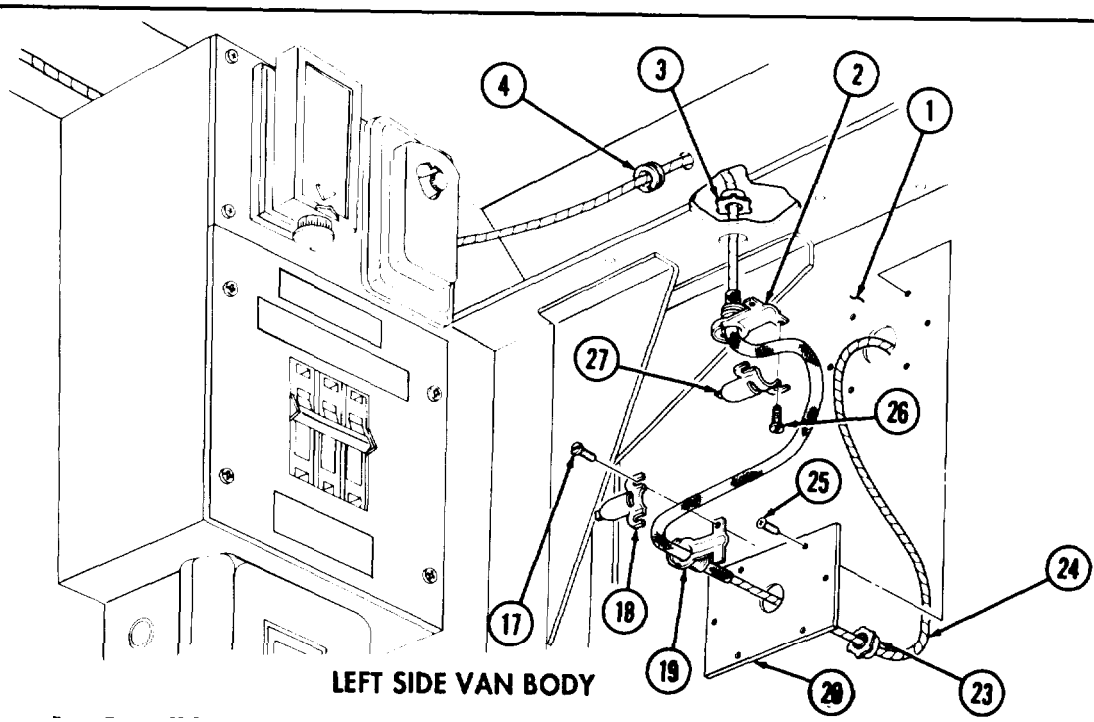

LEFT SIDE VAN BODY

FOLLOW-ON TASKS: • Install hinged-roof operated blackout circuit plunger (TM 9-2320-260-20).
• Connect battery ground cable at frame (TM 9-2320-260-20).
• Retract van body sides (TM 9-2320-260-10).
• Connect external power source (TM 9-2320-260-10).

15-73. LEFT SIDE EMERGENCY LAMP WIRING HARNESS REPLACEMENT

THIS TASK COVERS:

a. Removal **b. Installation**

INITIAL SETUP

APPLICABLE MODELS
M820, M820A2

TEST EQUIPMENT
Multimeter (Appendix B, Item 115)

TOOLS
General mechanic's tool kit (Appendix B, Item 1)
Tool kit, electrical (Appendix B, Item 106)

MATERIALS/PARTS
Locknut (Appendix D, Item 191)
Safety wire (Appendix D, Item 371)
Electrical tape (Appendix C, Item 51)

REFERENCES (TM)
TM 9-2320-260-10
TM 9-2320-260-20
TM 9-2320 -260-34P-2

EQUIPMENT CONDITION
- External power source disconnected (TM 9-2320-260-10).
- Battery ground cable disconnected (TM 9-2320-260-20).
- Ceiling filler and side panels removed (M820, M820A2) (para. 15-44).

CAUTION

Use care when replacing wiring harness. Excessive snagging or pulling may damage wiring harness.

a. Removal

NOTE

Tag wires, cables, and leads for installation.

1. Remove twelve screws (5) and clamps (4) from van ceiling (1).
2. Remove two screws (11) and cover (12) from switch (14).
3. Remove two screws (13) and pull switch (14) forward.
4. Loosen two screws (10) and remove three wires (9) from switch (14).
5. Remove four screws (8) and switch box (15) from van body (2).
6. Remove grommet (7) and left side emergency lamp wiring harness (3) from switch box (15).
7. Disconnect right side emergency lamp wiring harness lead (16) from left side emergency lamp wiring harness lead (6).
8. Disconnect lead (19) from circuit breaker (26).
9. Remove two screws (18), screws (24), clamps (17), and clamps (25) from van body (2).
10. Remove screw (23), locknut (21), and clamp (22) from spare tire carrier mounting bracket (20). Discard locknut (21).
11. Remove nut (29) and wire (27) from positive battery terminal (28).

NOTE

- Safety wire will be used to install new wiring harness. Do not cut safety wire from spool until wiring harness has been pulled through and proper length has been obtained.
- Safety wire must be attached to wires with electrical tape,

12. Remove grommet (30) and left side emergency lamp wiring harness (3) from van body (2).

15-73. LEFT SIDE EMERGENCY LAMP WIRING HARNESS REPLACEMENT (Contd)

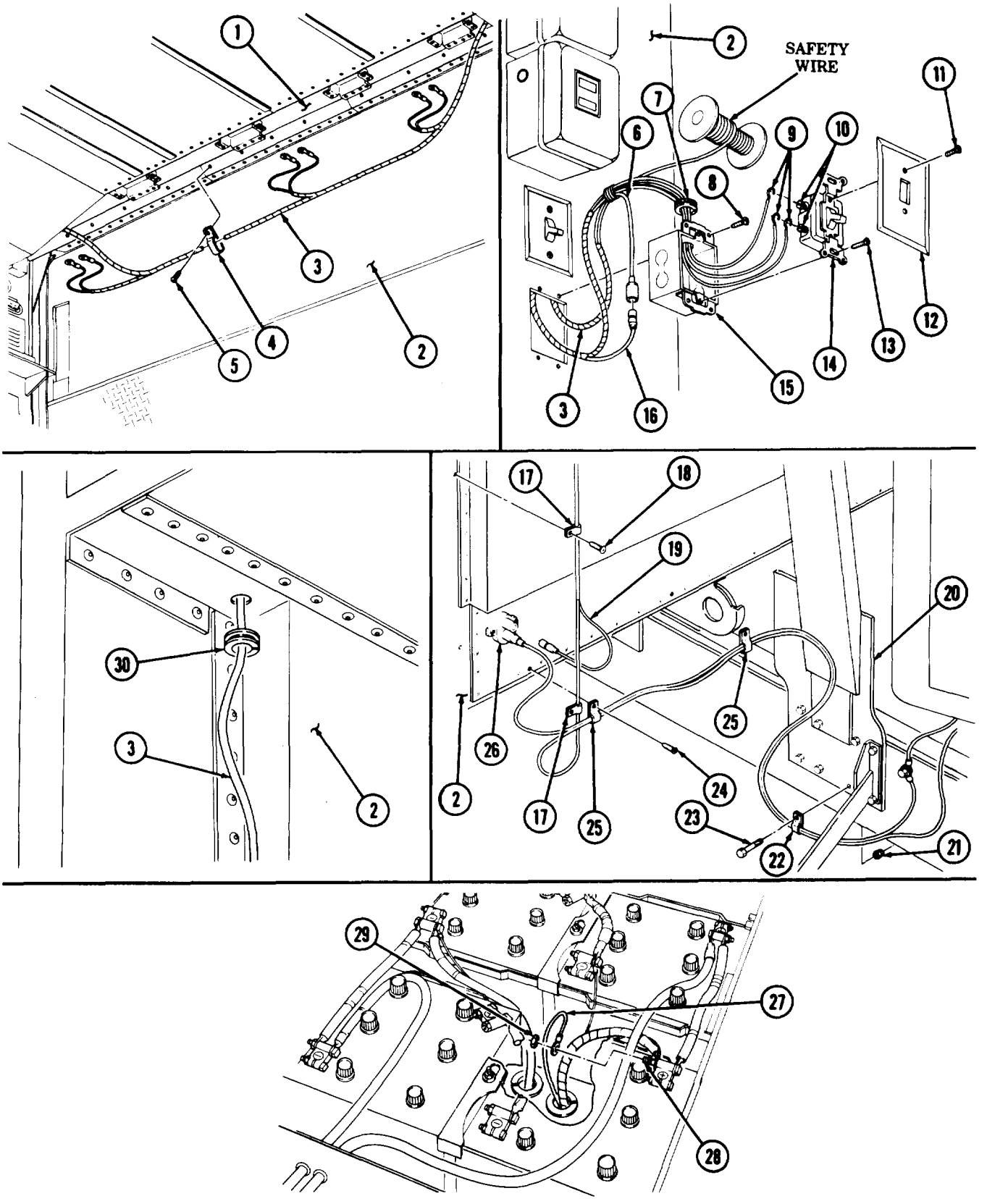

15-73. LEFT SIDE EMERGENCY LAMP WIRING HARNESS REPLACEMENT (Contd)

b. Installation

1. Position left side emergency lamp wiring harness (2) in van body (3). Ensure left side emergency lamp wiring harness (2) is routed through twelve clamps (4), grommet (6), two clamps (10), clamps (13), clamp (15), and grommet (21).
2. Install grommet (6) in van ceiling (1).
3. Install wire (8) on positive battery terminal (9) with nut (7).
4. Install clamp (15) on spare tire carrier mounting bracket (14) with screw (17) and new locknut (16).
5. Install two clamps (10) and clamps (13) on van body (3) with two screws (11) and screws (18).
6. Connect lead (12) to circuit breaker (19).
7. Connect left side emergency lamp wiring harness lead (20) to right side emergency lamp wiring harness lead (30).
8. Install grommet (21) in switch box (29) and route three wires (23) through grommet (21) and switch box (29).
9. Install switch box (29) in van body (3) with four screws (22).
10. Install three wires (23) on switch (28) by tightening two screws (24).
11. Install switch (28) on switch box (29) with two screws (27).
12. Install cover (26) on switch (28) with two screws (25).
13. Secure left side emergency lamp wiring harness (2) to van ceiling (1) with twelve clamps (4) and screws (5).

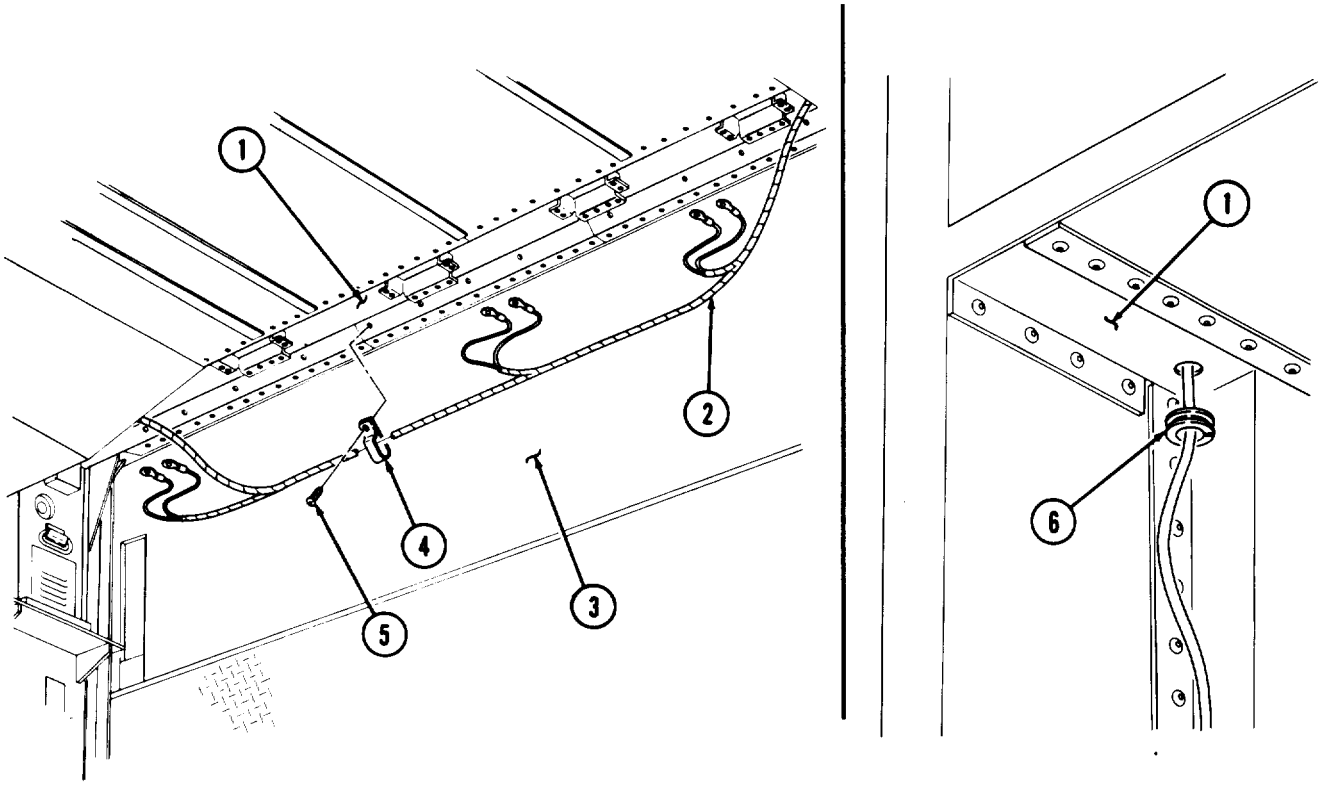

15-73. LEFT SIDE EMERGENCY LAMP WIRING HARNESS REPLACEMENT (Contd)

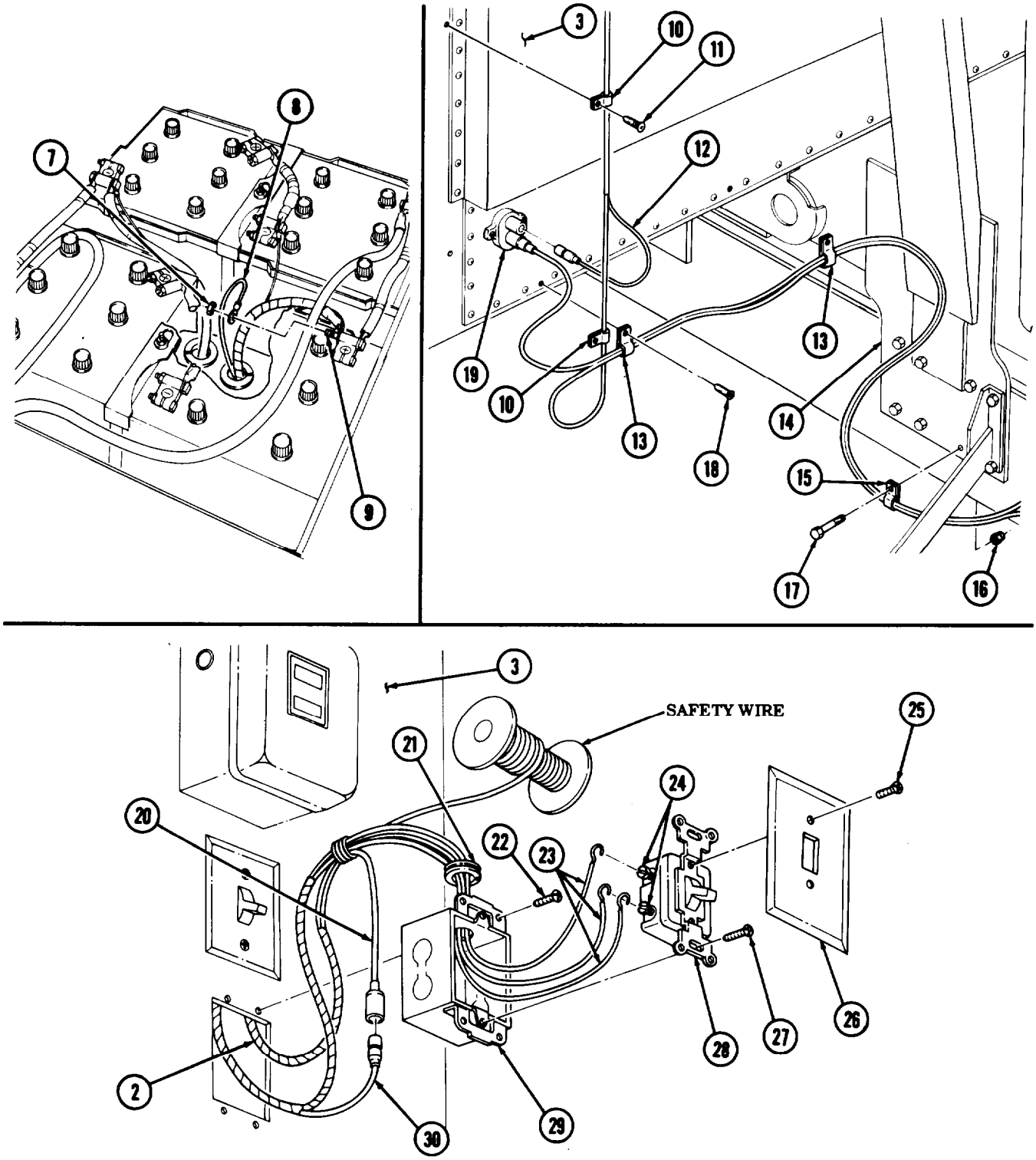

FOLLOW-ON TASKS:
- Install ceiling filler and side panels (M820, M820A2) (para. 15-44).
- Connect battery ground cable (TM 9-2320-260-20).
- Connect external power source (TM 9-2320-260-10).

15-74. RIGHT SIDE EMERGENCY LAMP WIRING HARNESS REPLACEMENT

THIS TASK COVERS:

a. Removal **b. Installation**

INITIAL SETUP

APPLICABLE MODELS
M820, M820A2

TEST EQUIPMENT
Multimeter (Appendix B, Item 115)

TOOLS
General mechanic's tool kit (Appendix B, Item 1)
Tool, kit, electrical (Appendix B, Item 106)

MATERIALS/PARTS
Safety wire (Appendix D, Item 371)
Electrical tape (Appendix C, Item 51)

REFERENCES (TM)
TM 9-2320-260-10
TM 9-2320-260-20
TM 9-2320 -260-34P-2

EQUIPMENT CONDITION
- External power source disconnected (TM 9-2320-260-10).
- Battery ground cable disconnected (TM 9-2320-260-20).
- Ceiling filler and side panels removed (M820, M820A2) (para. 15-44).

CAUTION

Use care when replacing wiring harness. Excessive snagging or pulling may damage wiring harness.

a. Removal

NOTE

Tag wires, cables, and leads for installation.

1. Remove twelve screws (2) and clamps (3) from van ceiling (1).
2. Remove two screws (11) and cover (12) from switch (14).
3. Remove two screws (13) and pull switch (14) forward.
4. Loosen two screws (10) and remove three wires (9) from switch (14).
5. Remove four screws (8) and switch box (15) from van body (4).
6. Remove grommet (7) and right side emergency lamp wiring harness (5) from switch box (15).
7. Disconnect left side emergency lamp wiring harness lead (6) from right side emergency lamp wiring harness lead (16).

NOTE

- Safety wire will be used to install new wiring harness. Do not cut safety wire from spool until wiring harness has been pulled through and proper length has been obtained.
- Safety wire must be attached to wires with electrical tape.

8. Remove right side emergency lamp wiring harness (5) from van body (4).

15-74. RIGHT SIDE EMERGENCY LAMP WIRING HARNESS REPLACEMENT (Contd)

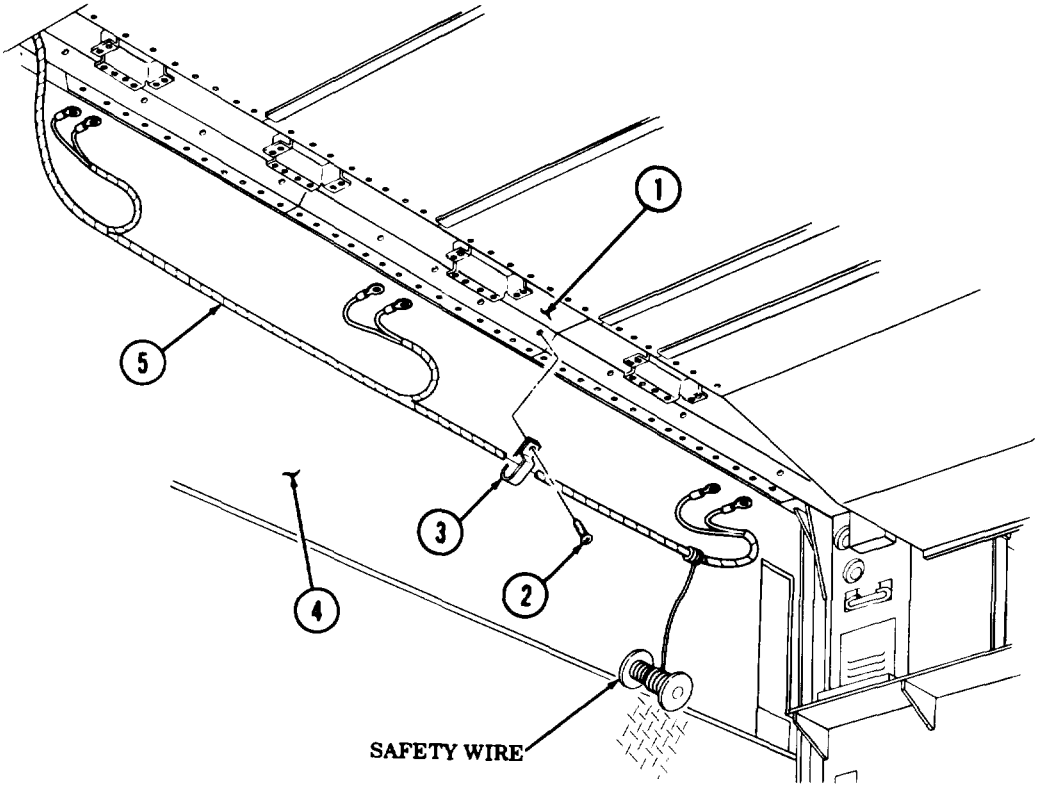

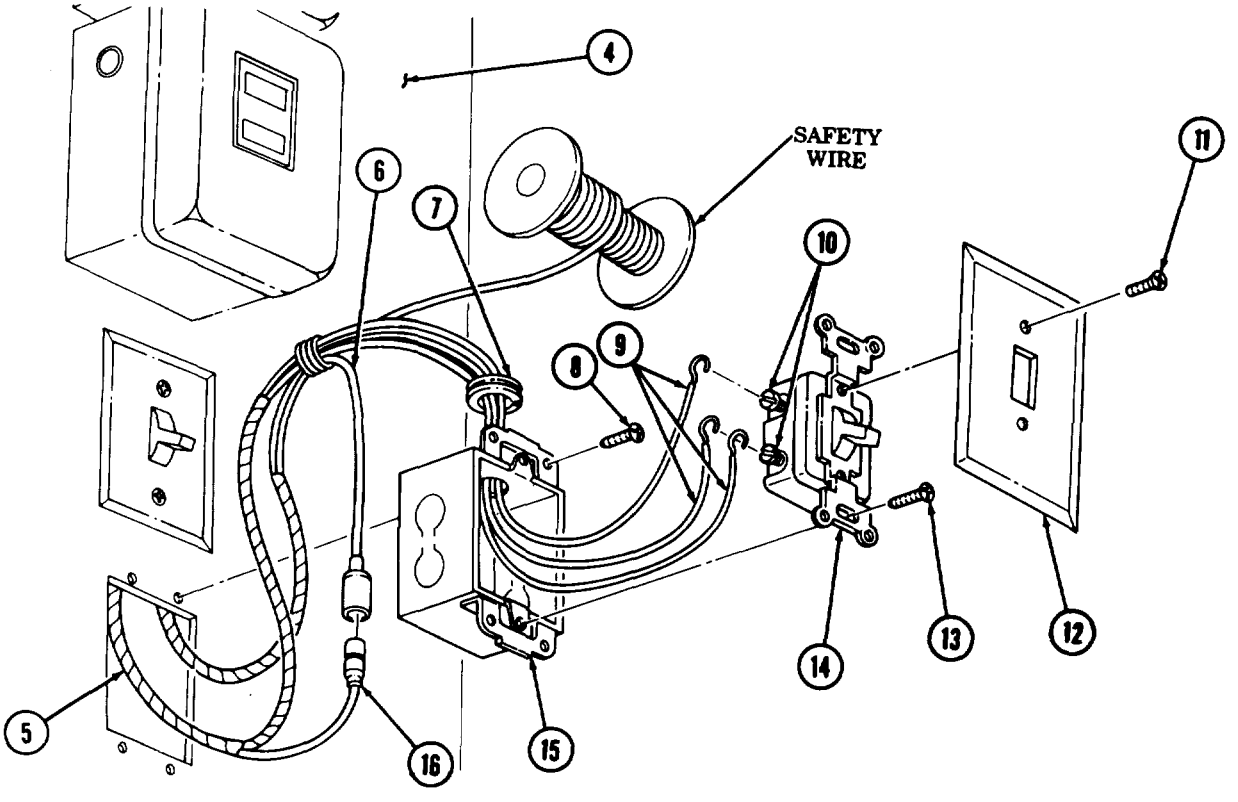

15-74. RIGHT SIDE EMERGENCY LAMP WIRING HARNESS REPLACEMENT (Contd)

b. Installation

1. Position right side emergency lamp wiring harness (5) in van body (4). Ensure right side emergency lamp wiring harness (5) is routed through twelve clamps (3).
2. Connect right side emergency lamp wiring harness lead (16) to left side emergency lamp wiring harness lead (6).
3. Install grommet (7) in switch box (15) and route three wires (9) through grommet (7) and switch box (15).
4. Install switch box (15) in van body (4) with four screws (8).
5. Install three wires (9) on switch (14) by tightening two screws (10).
6. Install switch (14) on switch box (15) with two screws (13).
7. Install cover (11) on switch (14) with two screws (12).
8. Secure right side emergency lamp wiring harness (5) to van ceiling (1) with twelve clamps (3) and screws (2).

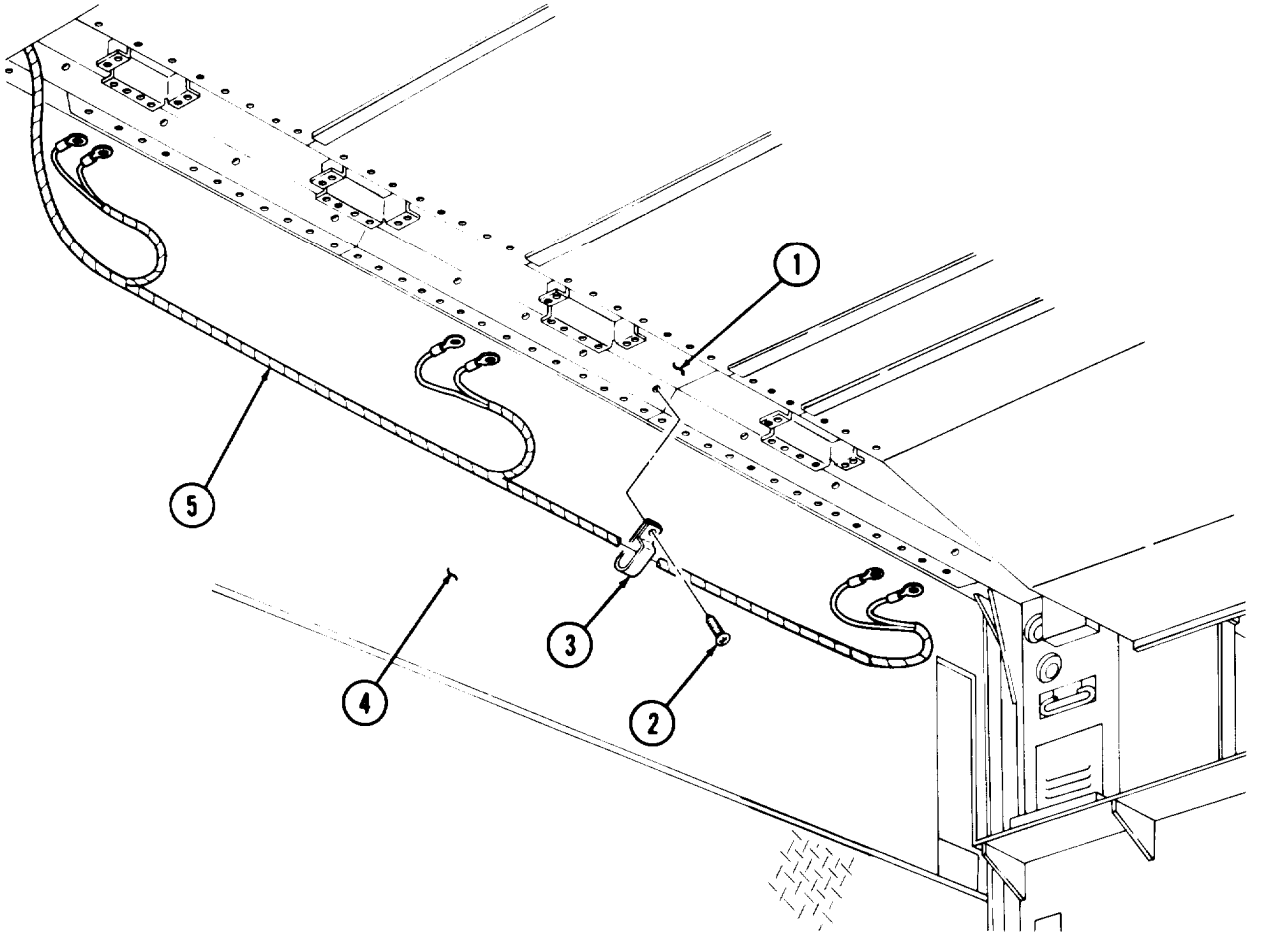

15-74. RIGHT SIDE EMERGENCY LAMP WIRING HARNESS REPLACEMENT (Contd)

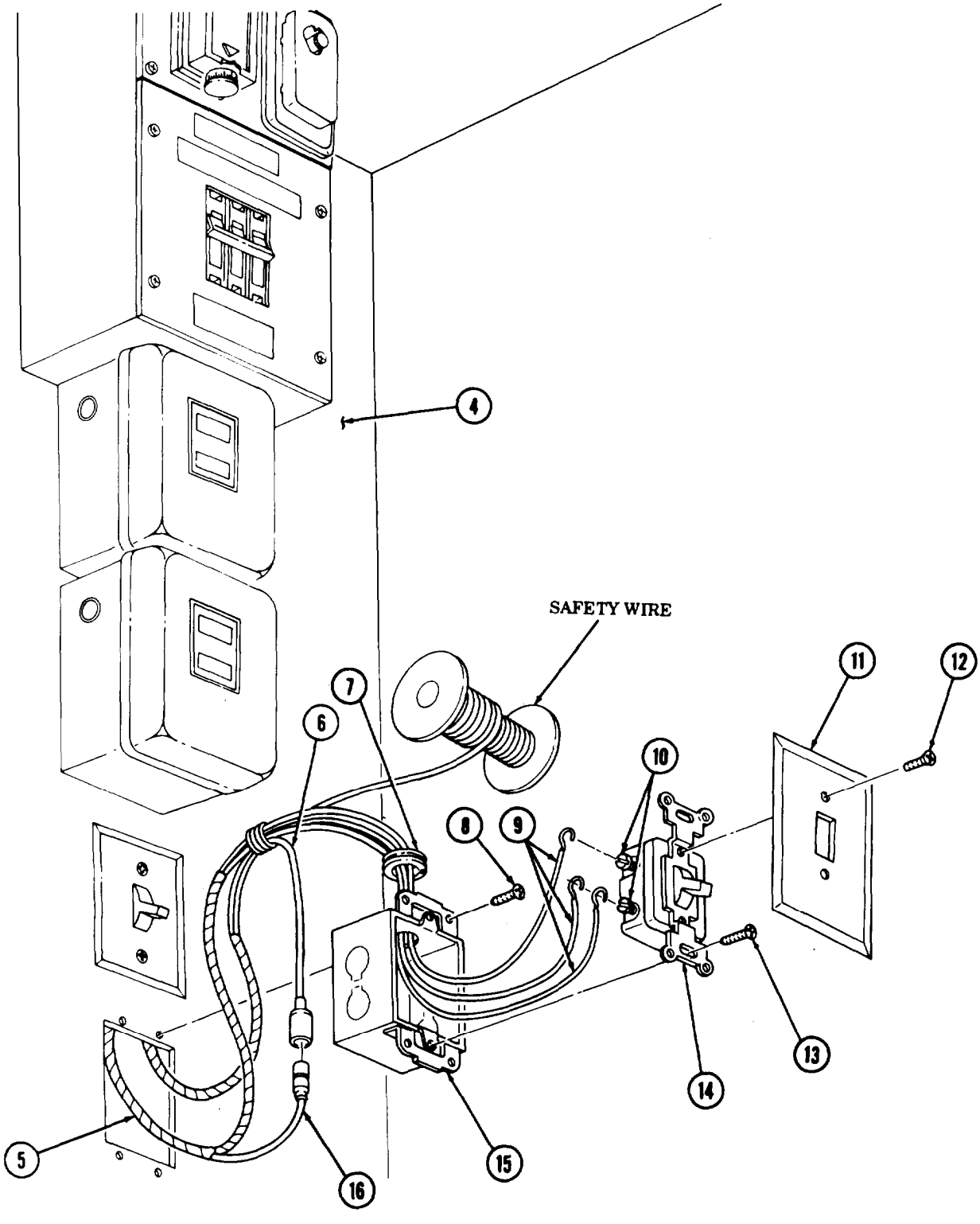

FOLLOW-ON TASKS:
- Install ceiling filler and side panels (M820, M820A2) (para. 15-44).
- Connect battery ground cable (TM 9-2320-260-20).
- Connect external power source (TM 9-2320-260-10).

15-75. TELEPHONE POST WIRING HARNESS REPLACEMENT

THIS TASK COVERS:

a. Removal **b. Installation**

INITIAL SETUP

APPLICABLE MODELS
M820, M820A2

TEST EQUIPMENT
Multimeter (Appendix B, Item 115)

TOOLS
General mechanic's tool kit (Appendix B, Item 1)
Toolkit, electrical (Appendix B, Item 106)

MATERIALS/PARTS
Safety wire (Appendix D, Item 371)
Electrical tape (Appendix C, Item 51)

REFERENCES (TM)
TM 9-2320-260-10
TM 9-2320-260-20
TM 9-2320-260-34P-2

EQUIPMENT CONDITION
- External power source disconnected (TM 9-2320-260-10).
- Battery ground cable disconnected (TM 9-2320-260-20).
- Interior and exterior telephone jacks removed (TM 9-2320-260-20).
- Ceiling filler and side panels removed (M820, M820A2) (para. 15-44).

CAUTION

Use care when replacing wiring harness. Excessive snagging or pulling may damage wiring harness.

a. Removal

NOTE

Tag wires, cables, and leads for installation.

1. Remove twelve screws (3) and clamps (2) from van ceiling (1).

NOTE

- Safety wire will be used to install new wiring harness. Do not cut safety wire from spool until wiring harness has been pulled through and proper length has been obtained.
- Safety wire must be attached to wires with electrical tape.

2. Remove telephone post wiring harness (4) from van body (5).

b. Installation

1. Position telephone post wiring harness (4) in van body (5). Ensure telephone post wiring harness (4) is routed through twelve clamps (2).
2. Secure telephone post wiring harness (4) to van ceiling (1) with twelve clamps (2) and screws (3).

15-75. TELEPHONE POST WIRING HARNESS REPLACEMENT (Contd)

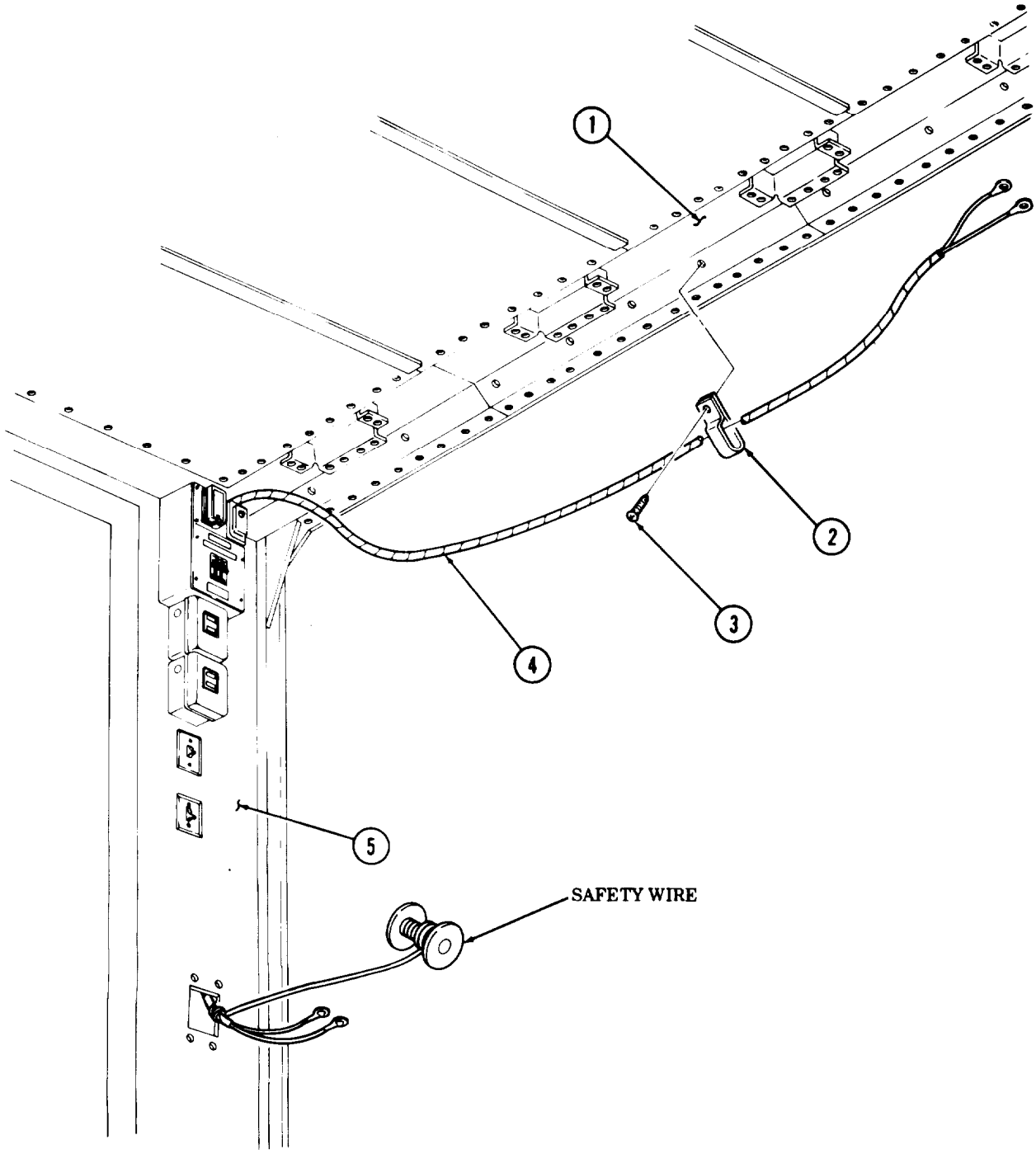

FOLLOW-ON TASKS:
- Install ceiling filler and side panels (M820, M820A2) (para. 15-44).
- Install interior and exterior telephone jacks (TM 9-2320-260-20).
- Connect battery ground cable (TM 9-2320-260-20).
- Connect external power source (TM 9-2320-260-10).

15-76. 3-PHASE RECEPTACLE WIRING HARNESS REPLACEMENT

THIS TASK COVERS:

a. Removal **b. Installation**

INITIAL SETUP

APPLICABLE MODELS
M820, M820A2

TEST EQUIPMENT
Multimeter (Appendix B, Item 115)

TOOLS
General mechanic's tool kit (Appendix B, Item 1)
Tool kit, electrical (Appendix B, Item 106)

MATERIALS/PARTS
Safety wire (Appendix D, Item 371)
Electrical tape (Appendix C, Item 51)

REFERENCES (TM)
TM 9-2320-260-10
TM 9-2320-260-20
TM 9-2320-260-34P-2

EQUIPMENT CONDITION
- External power source disconnected (TM 9-2320-260-10).
- Battery ground cable disconnected (TM 9-2320-260-20).
- 3-phase receptacle removed (TM 9-2320-260-20).
- Ceiling filler and side panels removed (M820, M820A2) (para. 15-44).

CAUTION

Use care when replacing wiring harness. Excessive snagging or pulling may damage wiring harness.

a. Removal

NOTE

Tag wires, cables, and leads for installation.

1. Remove twelve screws (5) and clamps (4) from van ceiling (1).
2. Remove six screws (6) and cover (7) from load center (11).
3. Remove screw (8) and clamp (9) from mounting plate (10).
4. Remove three screws (14) and wires (15) from 20-amp circuit breaker (13).
5. Remove setscrew (17) and wire (16) from neutral bar (12).

NOTE

- Safety wire will be used to install new wiring harness. Do not cut safety wire from spool until wiring harness has been pulled through and proper length has been obtained.
- Safety wire must be attached to wires with electrical tape.

6. Remove 3-phase receptacle wiring harness (2) from van body (3).

b. Installation

1. Position 3-phase receptacle wiring harness (2) in van body (3). Ensure 3-phase receptacle wiring harness (2) is routed through twelve clamps (4) and clamp (9).
2. Install wire (16) in neutral bar (12) with setscrew (17).
3. Install three wires (15) in 20-amp circuit breaker (13) with three screws (14).
4. Install clamp (9) on mounting plate (10) with screw (8).
5. Install cover (7) on load center (11) with six screws (6).
6. Secure 3-phase receptacle wiring harness (2) to van ceiling (1) with twelve clamps (4) and screws (5).

15-76. 3-PHASE RECEPTACLE WIRING HARNESS REPLACEMENT (Contd)

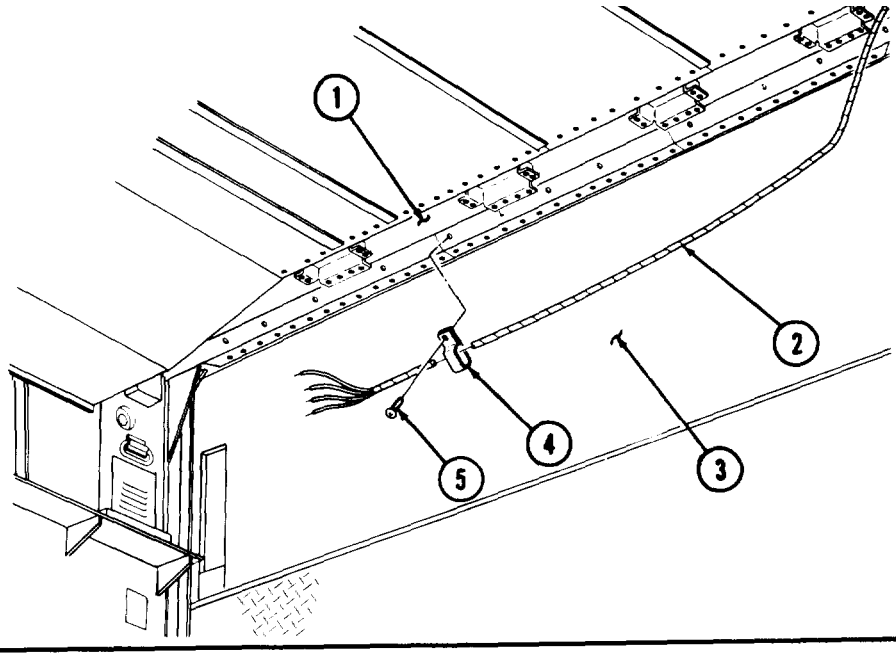

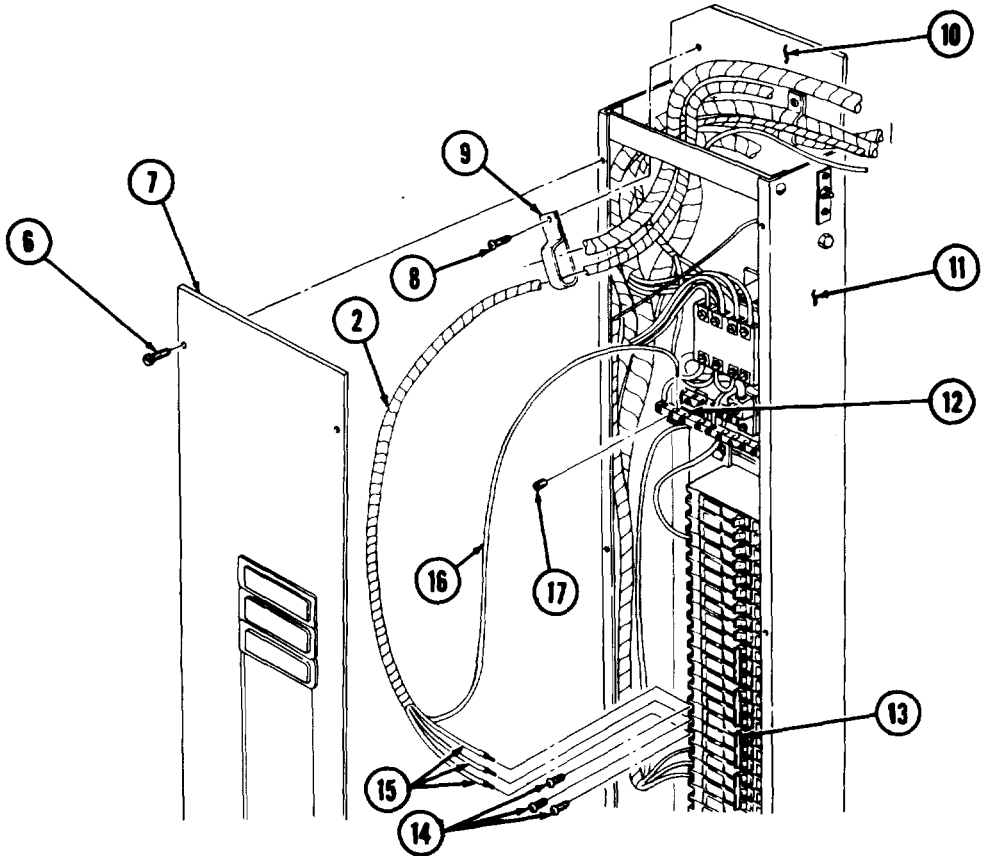

FOLLOW-ON TASKS:
- Install ceiling fine; and side panels (M820, M820A2) (para. 15-44).
- Install 3-phase receptacle (TM 9-2320-260-20).
- Connect battery ground cable (TM 9-2320-260-20).
- Connect external power source (TM 9-2320-260-10).

15-77. FLEXIBLE CONVERTER WIRING HARNESS REPLACEMENT

THIS TASK COVERS:

a. Removal **b. Installation**

INITIAL SETUP

APPLICABLE MODELS
M820, M820A2

TEST EQUIPMENT
Multimeter (Appendix B, Item 115)

TOOLS
General mechanic's tool kit (Appendix B, Item 1)
Tool kit, electrical (Appendix B, Item 106)

REFERENCES (TM)
TM 9-2320-260-10
TM 9-2320-260-20
TM 9-2320-260-34P-2

EQUIPMENT CONDITION
- External power source disconnected (TM 9-2320-260-10).
- Battery ground cable disconnected (TM 9-2320-260-20).

CAUTION

Use care when replacing wiring harness. Excessive snagging or pulling may damage wiring harness.

a. Removal

NOTE

- The flexible converter wiring harness and 400 Hz output wiring harness are replaced the same. This procedure covers the flexible converter wiring harness.
- Tag wires, cables, and leads for installation.

1. Disconnect connector (10) from junction box (9).
2. Remove four screws (1), cover (2), and gasket (3) from converter (6).
3. Remove three nuts (11), wires (7), and lockwasher (5) from converter (6).
4. Remove flexible converter wiring harness (8) from van body (4).

b. Installation

1. Position flexible converter wiring harness (8) in converter (6) and install lockwasher (5) over flexible converter wiring harness (8).
2. Install three wires (7) in converter (6) with three nuts (11).
3. Install gasket (3) and cover (2) on converter (6) with four screws (1).
4. Connect connector (10) to junction box (9).

15-77. FLEXIBLE CONVERTER WIRING HARNESS REPLACEMENT (Contd)

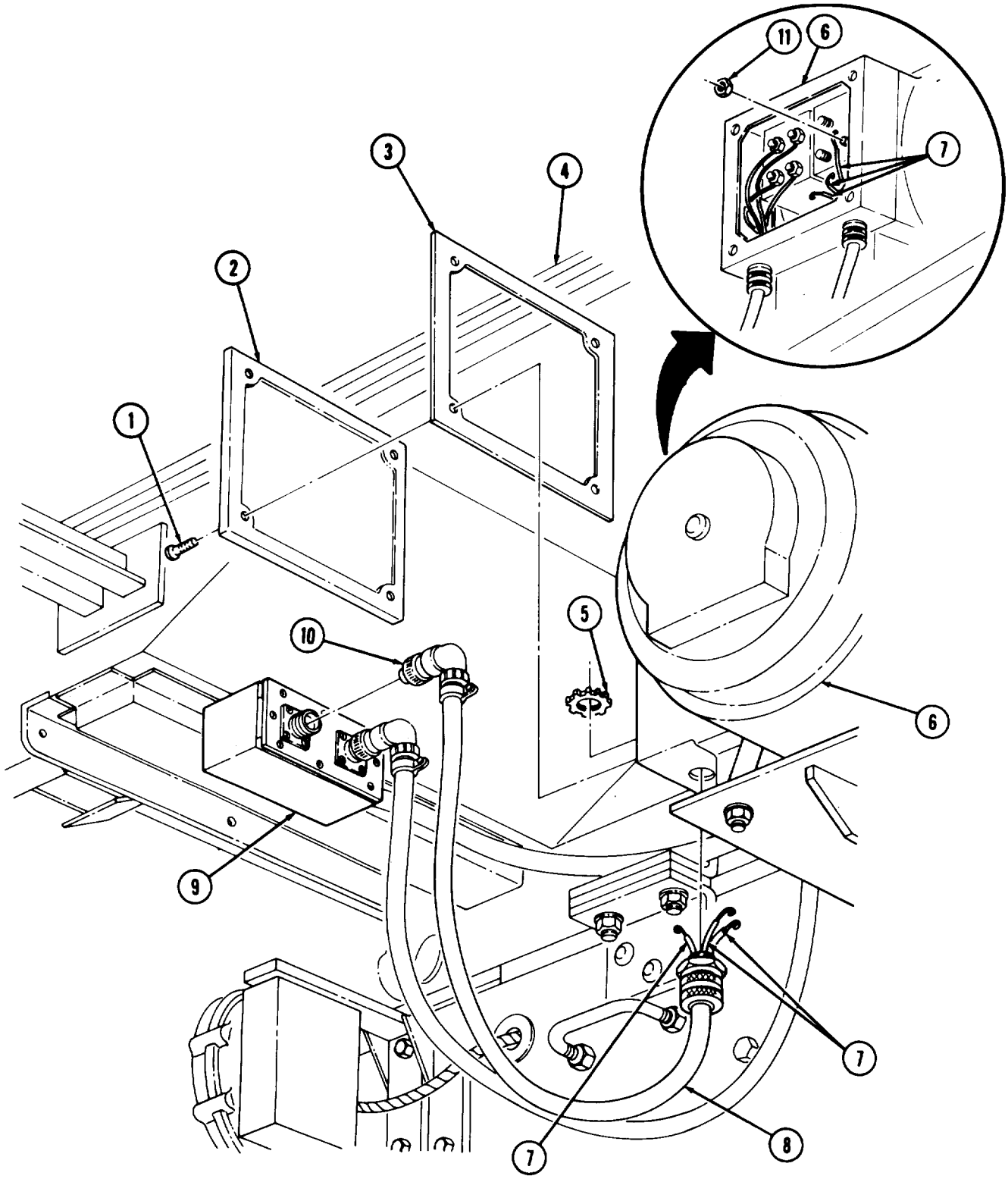

FOLLOW-ON TASKS: • Connect battery ground cable (TM 9-2320-260-20).
• Connect external power source (TM 9-2320-260-10).

15-78. 400 Hz SUPPLY WIRING HARNESS REPLACEMENT

THIS TASK COVERS:

a. Removal **b. Installation**

INITIAL SETUP

APPLICABLE MODELS
M820, M820A2

TEST EQUIPMENT
Multimeter (Appendix B, Item 115) .

TOOLS
General mechanic's tool kit (Appendix B, Item 1)
Tool kit, electrical (Appendix B, Item 106)
Soldering gun (Appendix B, Item 117)

MATERIALS/PARTS
Safety wire (Appendix D, Item 372)
Electrical tape (Appendix C, Item 51)

MATERIALS/PARTS (Contd)
Solder (Appendix C, Item 47)
Sealing compound (Appendix C, Item 45)

REFERENCES (TM)
TM 9-2320-260-10
TM 9-2320-260-20
TM 9-2320-260-34P-2

EQUIPMENT CONDITION
- External power source disconnected (TM 9-2320-260-10).
- Battery ground cable disconnected (TM 9-2320-260-20).

CAUTION

Use care when replacing wiring harness. Excessive snagging or pulling may damage wiring harness.

a. Removal

1. Remove eight screws (2) and upper and lower covers (3) and (6) from control center (8).

NOTE

Tag wires, cables, and leads for installation.

2. Remove three screws (5) and wires (9) from circuit breaker (7).
3. Remove screw (4) and wire (11) from terminal board (10).
4. Disconnect wiring harnesses (15) and (16) from connectors (17) and (18).
5. Remove eight screws (14) and cover (13) from junction box (20).
6. Desolder four wires (19) from connector (17).

NOTE

- Safety wire will be used to install new wiring harness. Do not cut safety wire from spool until wiring harness has been pulled through and proper length has been obtained.
- Safety wire must be attached to wires with electrical tape.

7. Remove 400 Hz supply wiring harness (1) from van body (12).

15-78. 400 Hz SUPPLY WIRING HARNESS REPLACEMENT (Contd)

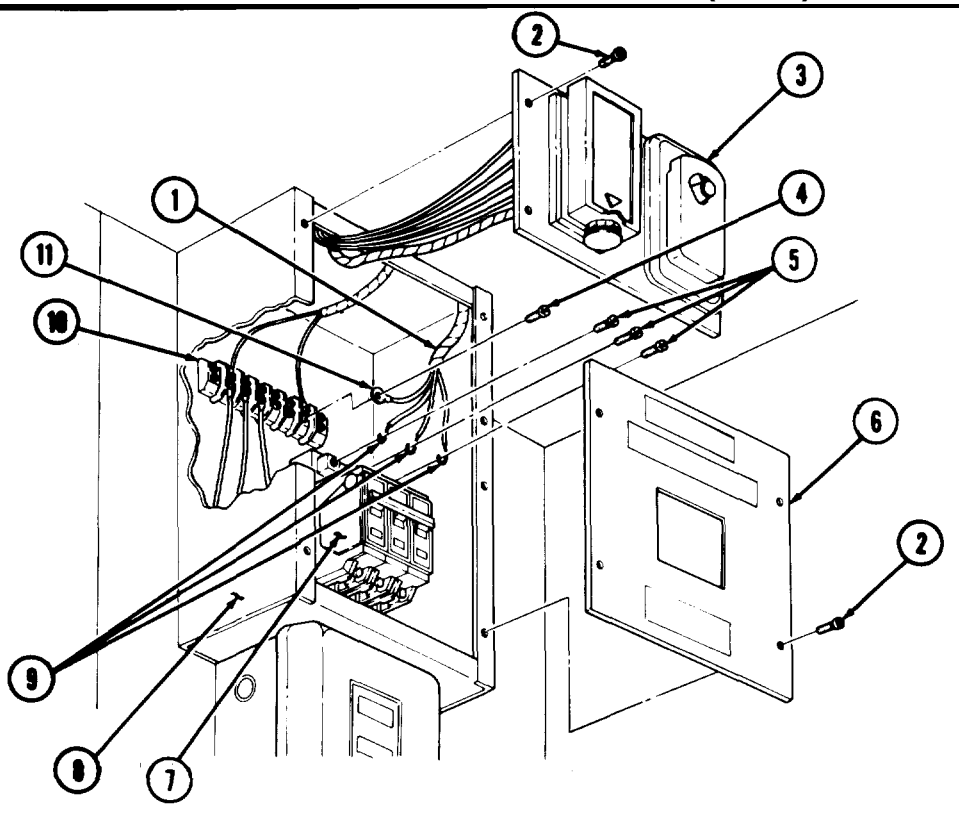

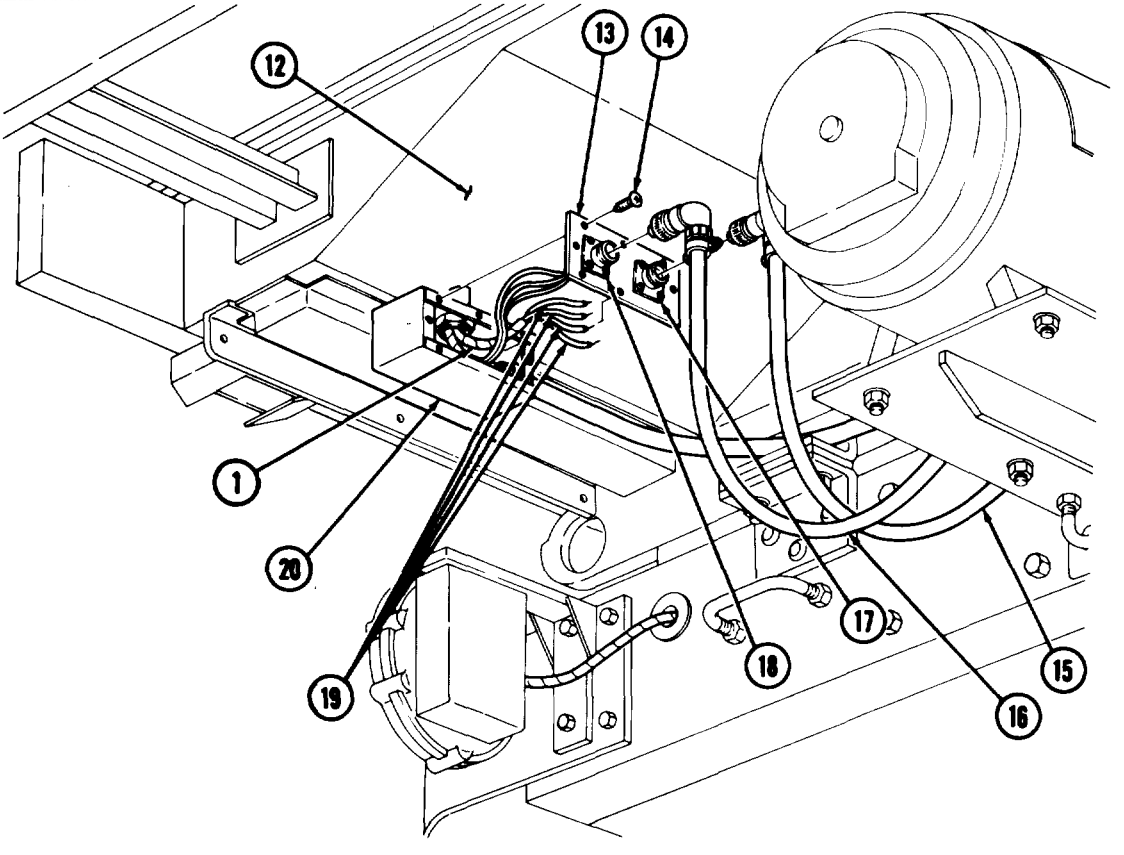

15-78. 400 Hz SUPPLY WIRING HARNESS REPLACEMENT (Contd)

b. Installation

1. Position 400 Hz supply wiring harness (10) in van body (1).
2. Solder four wires (8) to connector (6).
3. Apply sealing compound to cover (2) and install cover (2) on junction box (9) with eight screws (3).
4. Connect wiring harnesses (4) and (5) to connectors (6) and (7).
5. Install wire (19) on terminal board (18) with screw (20).
6. Install three wires (17) on circuit breaker (15) with three screws (13).
7. Install upper and lower covers (12) and (14) on control center (16) with eight screws (11).

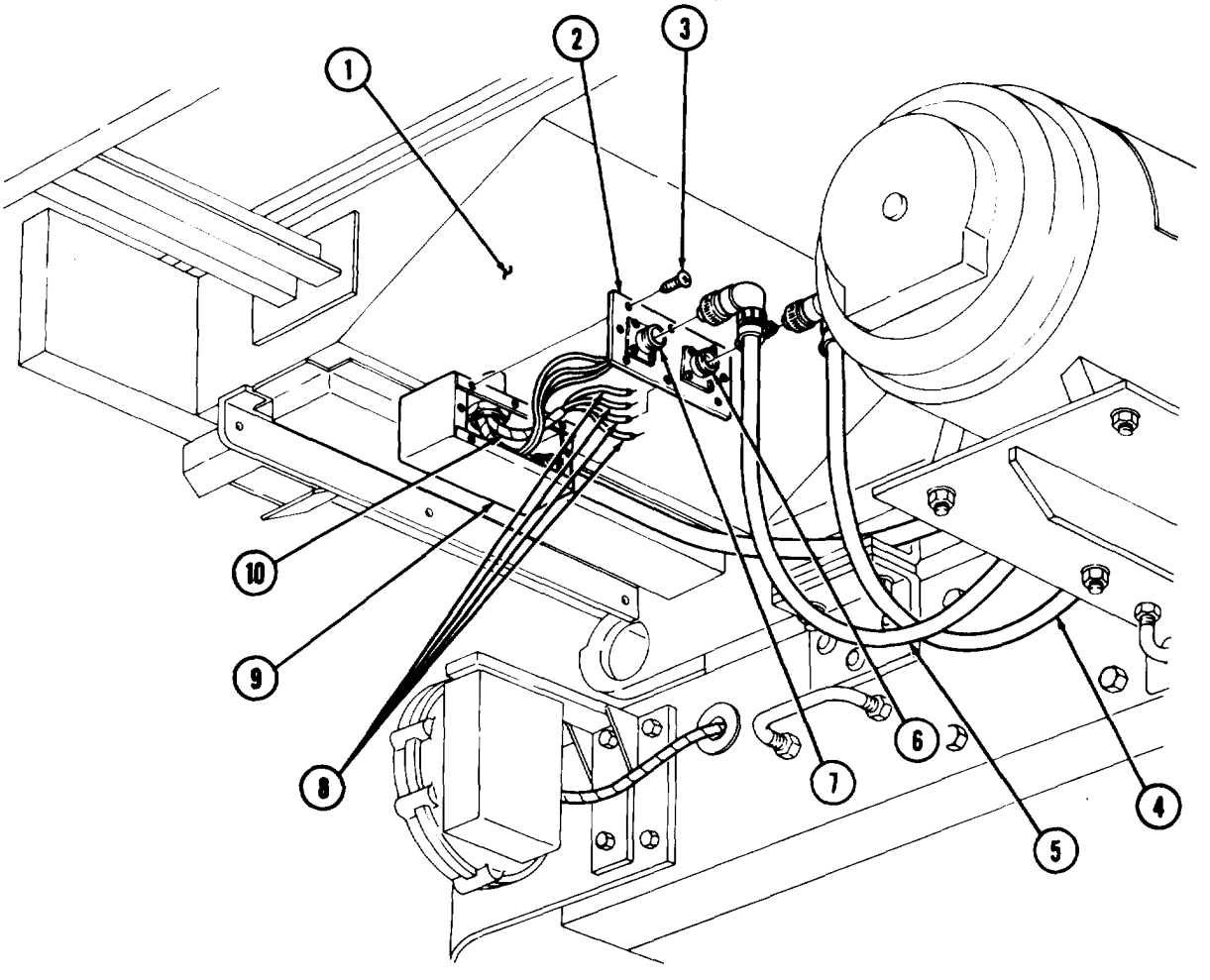

15-78. 400 Hz SUPPLY WIRING HARNESS REPLACEMENT (Contd)

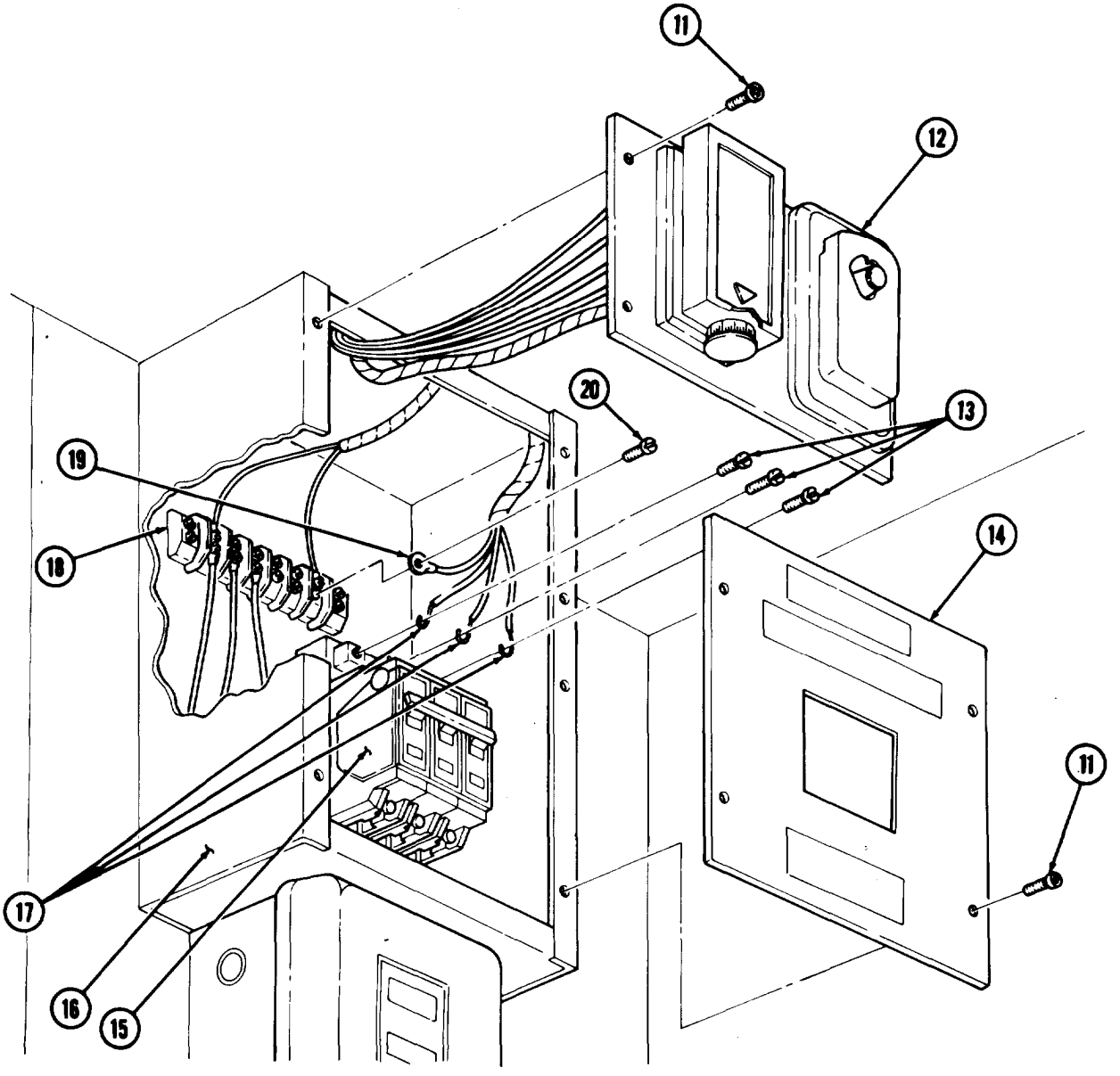

FOLLOW-ON TASKS: • Connect battery ground cable (TM 9-2320-260-20).
• Connect external power source (TM 9-2320-260-10).

15-79. 400 Hz RECEPTACLE WIRING HARNESS REPLACEMENT

THIS TASK COVERS:

a. Removal **b. Installation**

INITIAL SETUP

APPLICABLE MODELS
M820, M820A2

TEST EQUIPMENT
Multimeter (Appendix B, Item 115)

TOOLS
General mechanic's tool kit (Appendix B, Item 1)
Tool kit, electrical (Appendix B, Item 106)

MATERIALS/PARTS
Safety wire (Appendix D, Item 372)
Electrical tape (Appendix C, Item 51)

REFERENCES (TM)
TM 9-2320-260-10
TM 9-2320-260-20
TM 9-2320-260-34P-2

EQUIPMENT CONDITION
- External power source disconnected (TM 9-2320-260-10).
- Battery ground cable disconnected (TM 9-2320-260-20).
- Ceiling filler and side panel removed (M820, M820A2) (para. 15-44).

CAUTION

Use care when replacing wiring harness. Excessive snagging or pulling may damage wiring harness.

a. Removal

NOTE

Tag wires, cables, and leads for installation.

1. Remove four screws (3) and upper cover (2) from control center (1).
2. Remove two screws (4) and wires (5) from terminal board (6).
3. Remove six screws (10) and clamps (9) from van ceiling (7).

NOTE

- Safety wire will be used to install new wiring harness. Do not cut safety wire from spool until wiring harness has been pulled through and proper length has been obtained.
- Safety wire must be attached to wires with electrical tape.

4. Remove 400 Hz receptacle wiring harness (8) from van body (11).

b. Installation

1. Position 400 Hz receptacle wiring harness (8) in van body (11). Ensure 400 Hz receptacle wiring harness (8) is routed through six clamps (9).
2. Install two wires (5) on terminal board (6) with two screws (4).
3. Install upper cover (2) on control center (1) with four screws (3).
4. Install six clamps (9) in van ceiling (7) with six screws (10).

15-79. 400 Hz RECEPTACLE WIRING HARNESS REPLACEMENT (Contd)

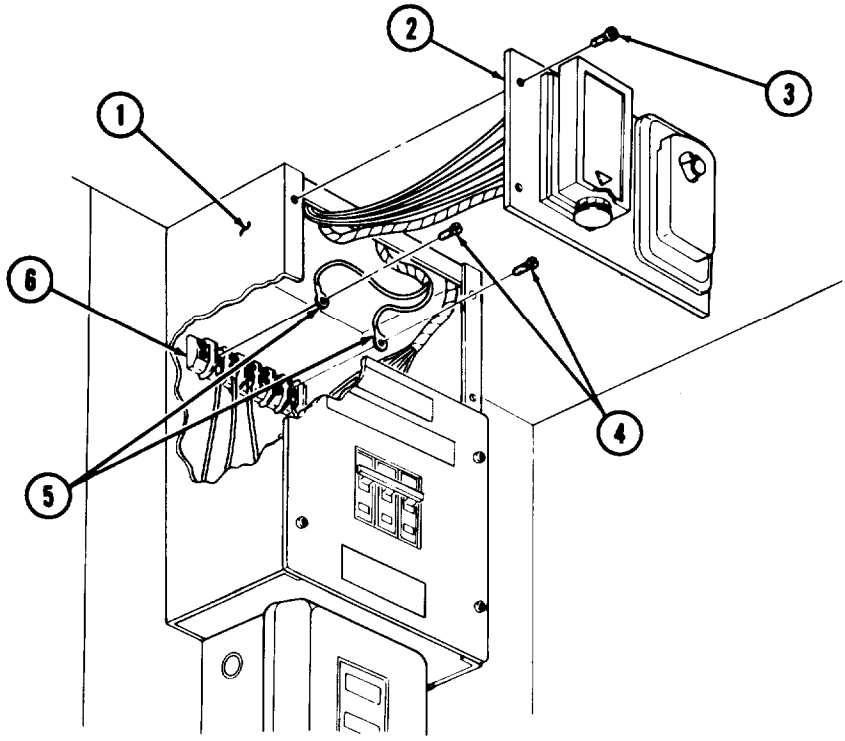

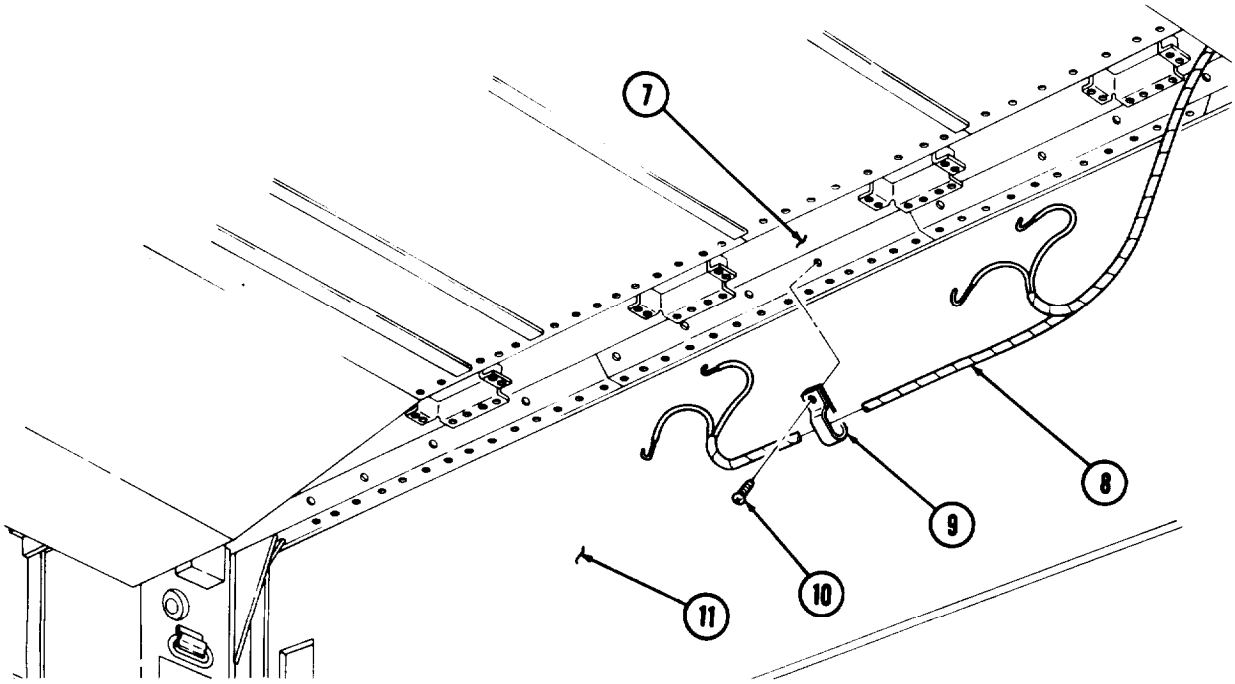

FOLLOW-ON TASKS:
- Install ceiling filler and side panels (M820, M820A2) (para. 15-44).
- Connect battery ground cable (TM 9-2320-260-20).
- Connect external power source (TM 9-2320-260-10).

15-80. CONVERTER AND AUXILIARY PUMP WIRING HARNESSES REPLACEMENT

THIS TASK COVERS:

a. Removal **b. Installation**

INITIAL SETUP

APPLICABLE MODELS
M820, M820A2

TEST EQUIPMENT
Multimeter (Appendix B, Item 115)

TOOLS
General mechanic's tool kit (Appendix B, Item 1)
Tool kit, electrical (Appendix B, Item 106)

MATERIALS/PARTS
Gasket (Appendix D, Item 76)
Safety wire (Appendix D, Item 372)
Electrical tape (Appendix C, Item 51)
Solder (Appendix C, Item 47)
Sealing compound (Appendix C, Item 45)

REFERENCES (TM)
TM 9-2320-260-10
TM 9-2320-260-20
TM 9-2320-260-34P-2

EQUIPMENT CONDITION
- Disconnect external power source (TM 9-2320-260-10).
- Battery ground cable disconnected (TM 9-2320-260-20).
- AC manual starter switches removed (para. 15-89).

CAUTION

Use care when replacing wiring harnesses. Excessive snagging or pulling may damage wiring harnesses.

NOTE

Tag wires, cables, and leads for installation.

a. Removal

1. Disconnect wiring harnesses (5) and (6) from connectors (8) and (4).
2. Remove eight screws (7) and cover (3) from junction box (1).
3. Desolder three wires (2) from connector (4).
4. Disconnect wiring harness (15) from connector (14).
5. Remove four screws (9), cover (10), and gasket (11) from outlet box (12). Discard gasket (11).
6. Desolder three wires (13) from connector (14).
7. Remove six screws (16) and cover (24) from load center (20).
8. Remove screw (17) and clamp (18) from mounting plate (19).
9. Remove six screws (23) and wires (26) from two 20-amp circuit breakers (22).

NOTE

- Safety wire will be used to install new wiring harness. Do not cut safety wire from spool until wiring harness has been pulled through and proper length has been obtained.
- Safety wire must be attached to wires with electrical tape.

10. Remove converter and auxiliary pump wiring harnesses (25) from van body (21).

15-80. CONVERTER AND AUXILIARY PUMP WIRING HARNESSES REPLACEMENT (Contd)

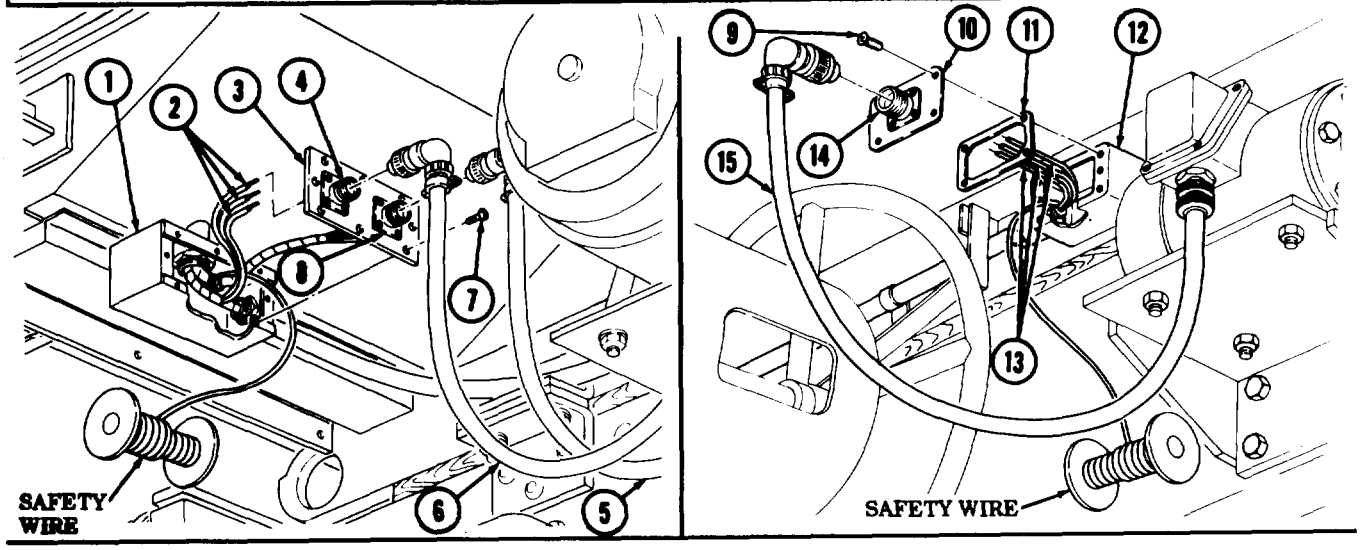

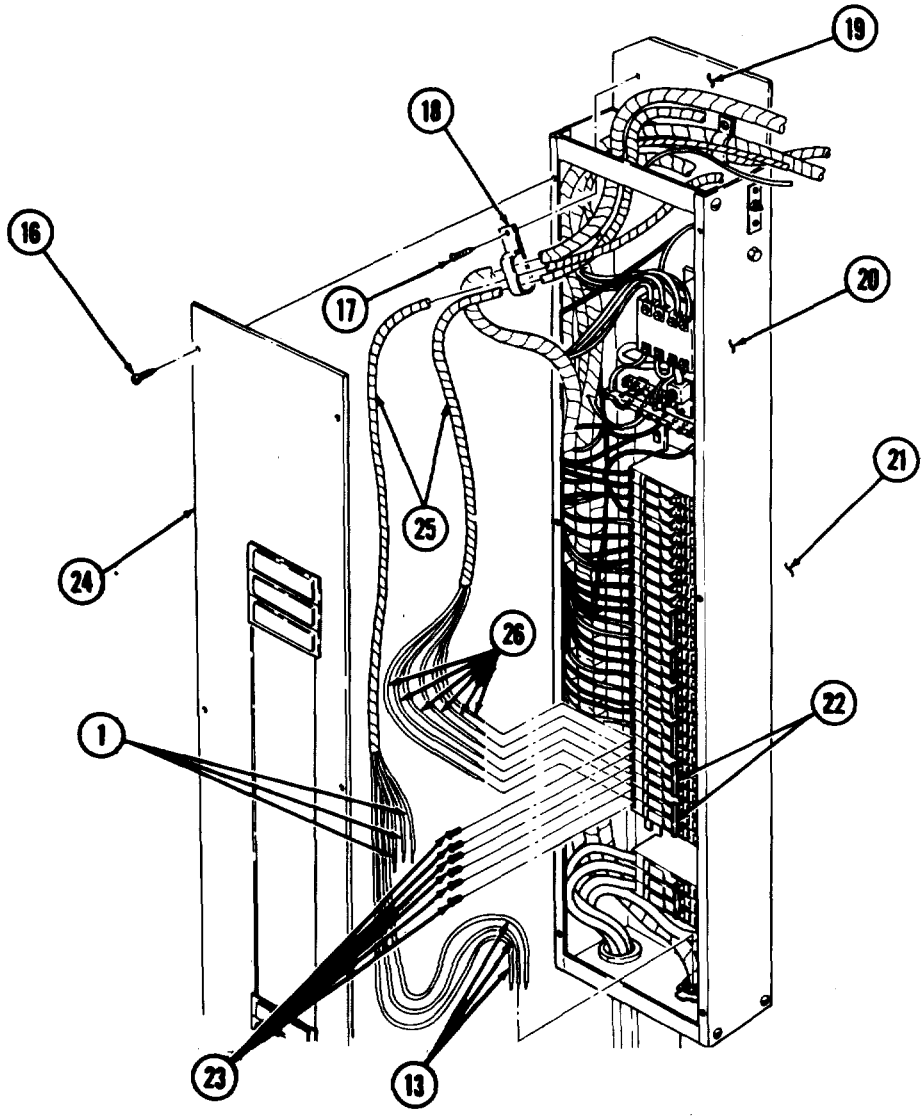

15-80. CONVERTER AND AUXILIARY PUMP WIRING HARNESSES REPLACEMENT (Contd)

1. Position converter and auxiliary pump wiring harnesses (11) in van body (7). Ensure converter and auxiliary pump wiring harnesses (11) are routed through clamp (4).
2. Install six wires (10) in two 20-amp circuit breakers (8) with six screws (9).
3. Install clamp (4) on mounting plate (5) with screw (3).
4. Install cover (2) on load center (6) with six screws (1).
5. Position new gasket (15) on outlet box (16).
6. Solder three wires (17) to connector (12).
7. Install gasket (15) and cover (14) on outlet box (16) with four screws (13),
8. Connect wiring harness (12) to connector (18).
9. Solder three wires (20) to connector (22).

NOTE

Apply sealing compound to cover.

10. Install cover (21) on junction box (19) with eight screws (25).
11. Connect wiring harnesses (23) and (24) to connectors (26) and (22).

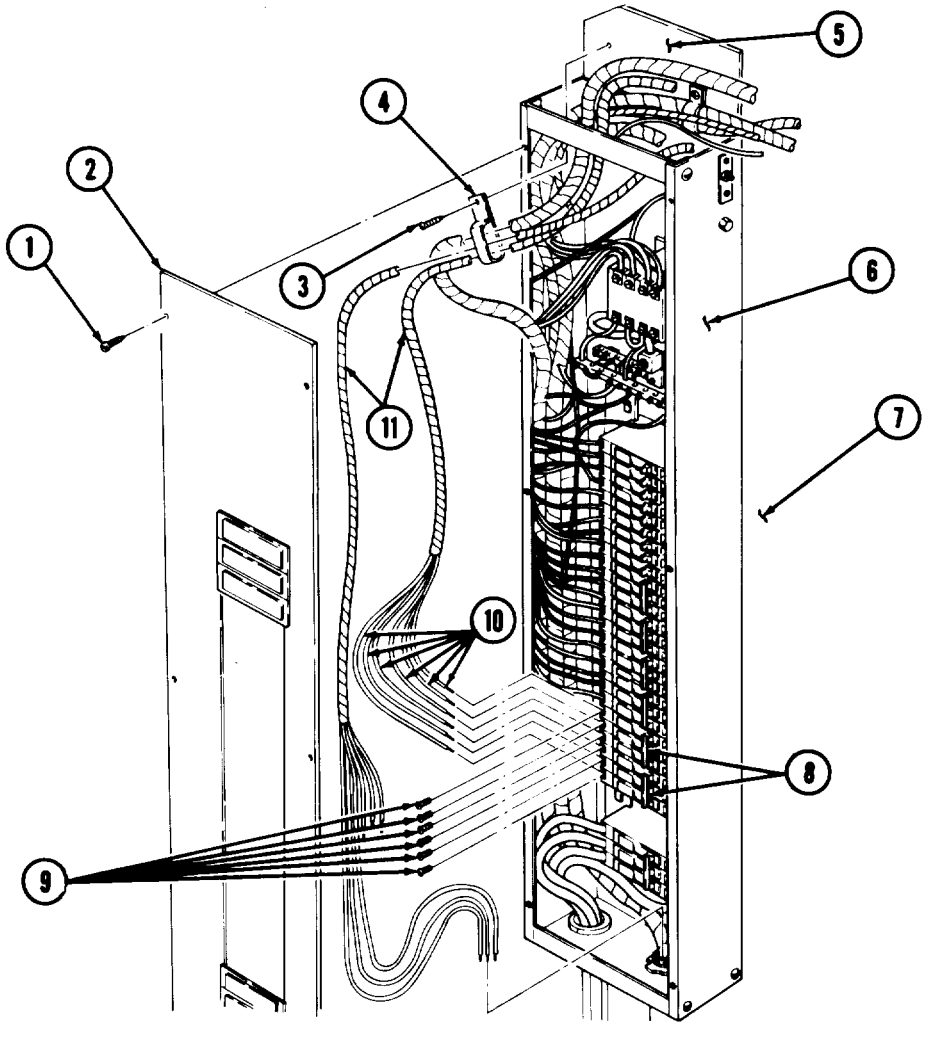

15-80. CONVERTER AND AUXILIARY PUMP WIRING HARNESSES REPLACEMENT (Contd)

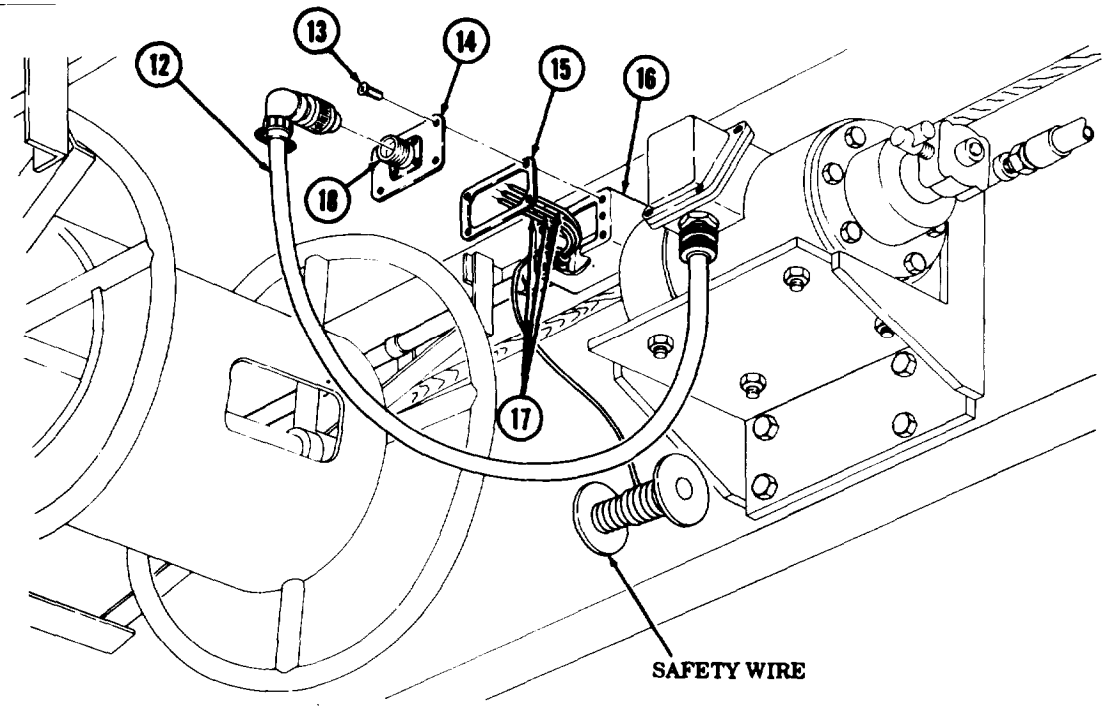

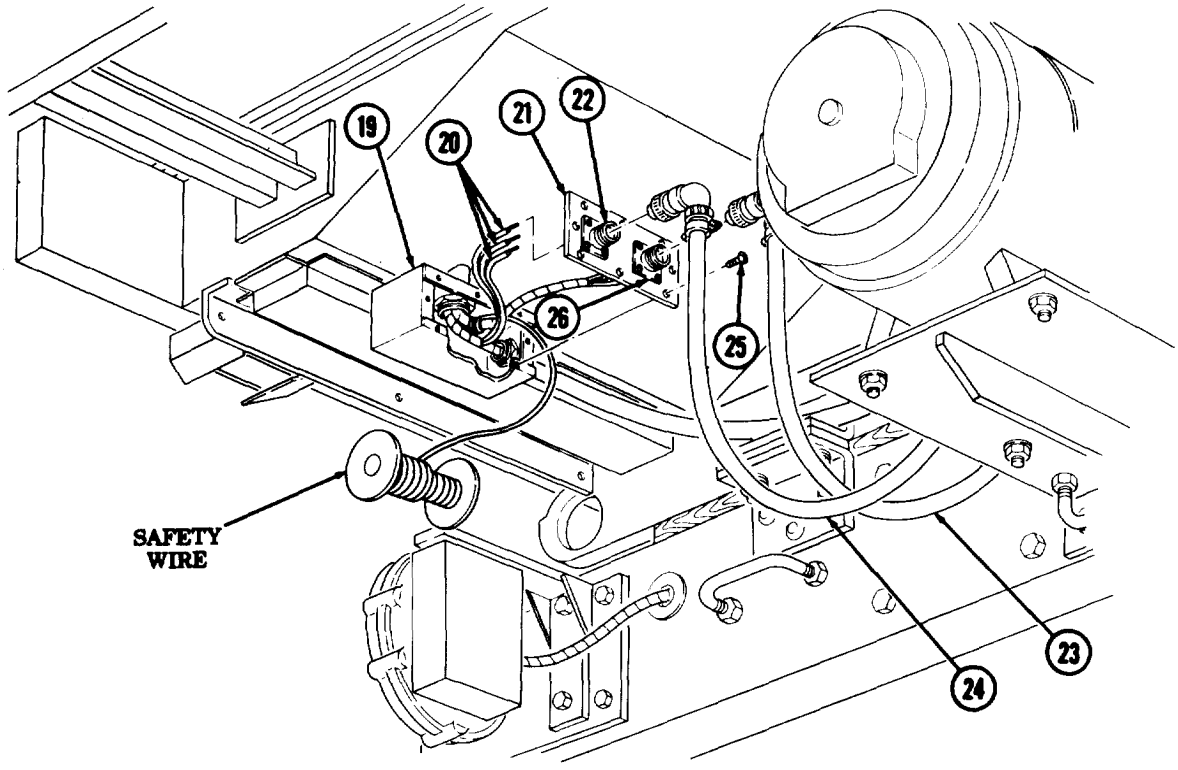

FOLLOW-ON TASK
- Install AC manual starter switches (para. 15-89).
- Connect battery ground cable (TM 9-2320-260-20).
- Connect external power source (TM 9-2320-260-10).

15-81. ENTRANCE RECEPTACLE REPLACEMENT

THIS TASK COVERS:

a. Removal **b. Installation**

INITIAL SETUP

APPLICABLE MODELS
M820, M820A1, M820A2

TEST EQUIPMENT
Multimeter (Appendix B, Item 115)

Tools
General mechanic's tool kit (Appendix B, Item 1)
Toolkit, electrical (Appendix B, Item 106)

MATERIALS/PARTS
Four locknuts (Appendix D, Item 190)
Safety wire (Appendix D, Item 372)
Electrical tape (Appendix C, Item 51)

REFERENCES (TM)
TM 9-2320-260-10
TM 9-2320-260-20
TM 9-2320-260-34P-2

EQUIPMENT CONDITION
- External power source disconnected (TM 9-2320-260-10).
- Battery ground cable disconnected (TM 9-2320-260-20).

CAUTION

Use care when replacing wiring harness. Excessive snagging or pulling may damage wiring harness.

a. Removal

NOTE

Tag wires, cables, and leads for installation.

1. Remove six screws (13) and cover (1) from load center (4).
2. Remove three screws (14) and wires (15) from 100-amp circuit breaker (17).
3. Remove setscrew (16) and wire (2) from neutral bar (3).
4. Remove three screws (9) from plate (10) and electrical box (11).
5. Remove four screws (6), locknuts (12), and receptacle (7) from van body (5). Discard locknuts (12).

NOTE

- Safety wire will be used to install new wiring harness. Do not cut safety wire from spool until wiring harness has been pulled through and proper length has been obtained.
- Safety wire must be attached to wires with electrical tape.

6. Remove entrance receptacle (8) from van body (5).

b. Installation

1. Position entrance receptacle (8) in van body (5).
2. Install receptacle (7) on van body (5) with four screws (6) and new locknuts (12).
3. Secure plate (10) on electrical box (11) with three screws (9).
4. Install wire (2) on neutral bar (3) with setscrew (16).
5. Install three wires (15) on 100-amp circuit breaker (17) with three screws (14).
6. Install cover (1) on load center (4) with six screws (13).

15-81. ENTRANCE RECEPTACLE REPLACEMENT (Contd)

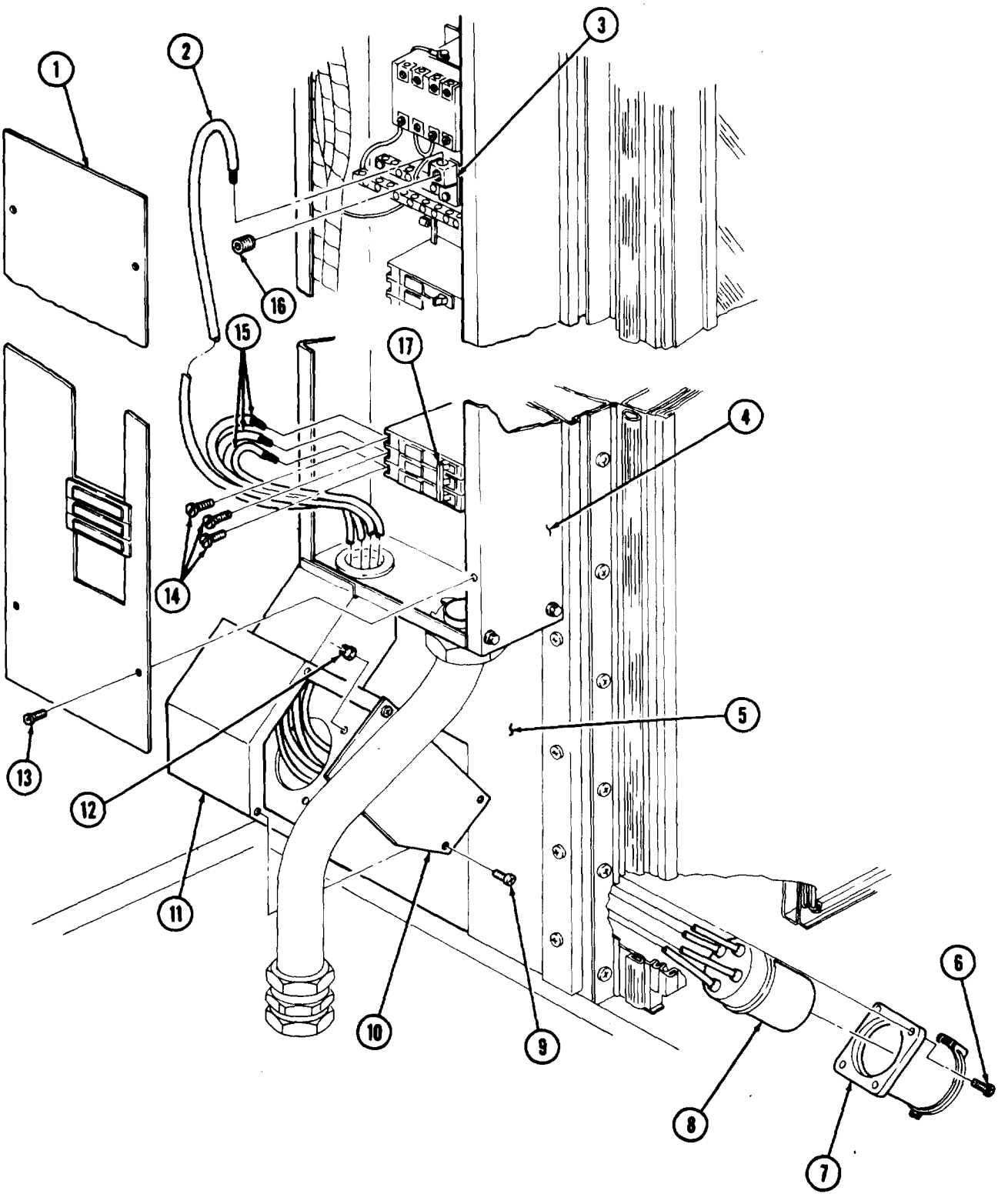

FOLLOW-ON TASKS: • Connect external power source (TM 9-2320-260-10).
• Connect battery ground cable (TM 9-2320-260-20).

15-82. LOAD CENTER MAINTENANCE

THIS TASK COVERS:

a. Removal
b. Disassembly
c. Assembly
d. Installation

INITIAL SETUP

APPLICABLE MODELS
M820, M820A1, M820A2

TEST EQUIPMENT
Multimeter (Appendix B, Item 115)

TOOLS
General mechanic's tool kit (Appendix B, Item 1)
Tool kit, electrical (Appendix B, Item 106)
Soldering gun (Appendix B, Item 117)

MATERIALS/PARTS
Two lockwashers (Appendix D, Item 248)
Gasket (Appendix D, Item 76)
Four lockwashers (Appendix D, Item 224)
Three lockwashers (Appendix D, Item 244)

MATERIALS/PARTS (Contd)
Safety wire (Appendix D, Item 372)
Electrical tape (Appendix C, Item 51)
Sealing compound (Appendix C, Item 43)
Solder (Appendix C, Item 47)

REFERENCES (TM)
TM 9-2320-260-10
TM 9-2320-260-20
TM 9-2320-260-34P-2

EQUIPMENT CONDITION
- Battery ground cable disconnected (TM 9-2320-260-20).
- External power source disconnected (TM 9-2320-260-10).

NOTE

Tag wires, cables, and leads for installation.

a. Removal

CAUTION

Use care when replacing load center. Excessive snagging and pulling may damage wiring harness.

1. Remove six screws (1) and cover (2) from load center (4).
2. Remove three setscrews (12) and wires (13) from relay (5).
3. Remove setscrew (10) and wire (11) from neutral bar (6).
4. Remove three screws (8) and five wires (9) from three 20-amp circuit breakers (7).
5. Remove main wiring harness (3) from load center (4).
6. Remove setscrew (20) and three wires (21) from relay (5).
7. Remove setscrew (18) and wire (19) from neutral bar (6).
8. Remove three screws (16) and five wires (17) from three 20-amp circuit breakers (15).
9. Remove main wiring harness (14) from load center (4).

NOTE

Perform steps 10 through 12 for M820 and M820A2 vehicles.

10. Remove setscrew (27) and wires (28) and (26) from relay (5).
11. Remove screw (24) and wire (25) from 20-amp circuit breaker (23).
12. Remove blackout bypass wiring harness (22) from load center (4).
13. Remove nut (30), lockwasher (29), wires (31), (32), and (35), screw (34), and lockwasher (33) from load center (4). Discard lockwashers (29) and (33).
14. Remove three screws (37) and wires (38) from 40-amp circuit breaker (36).
15. Remove air conditioner wiring harness (39) from load center (4).

15-82. LOAD CENTER MAINTENANCE (Contd)

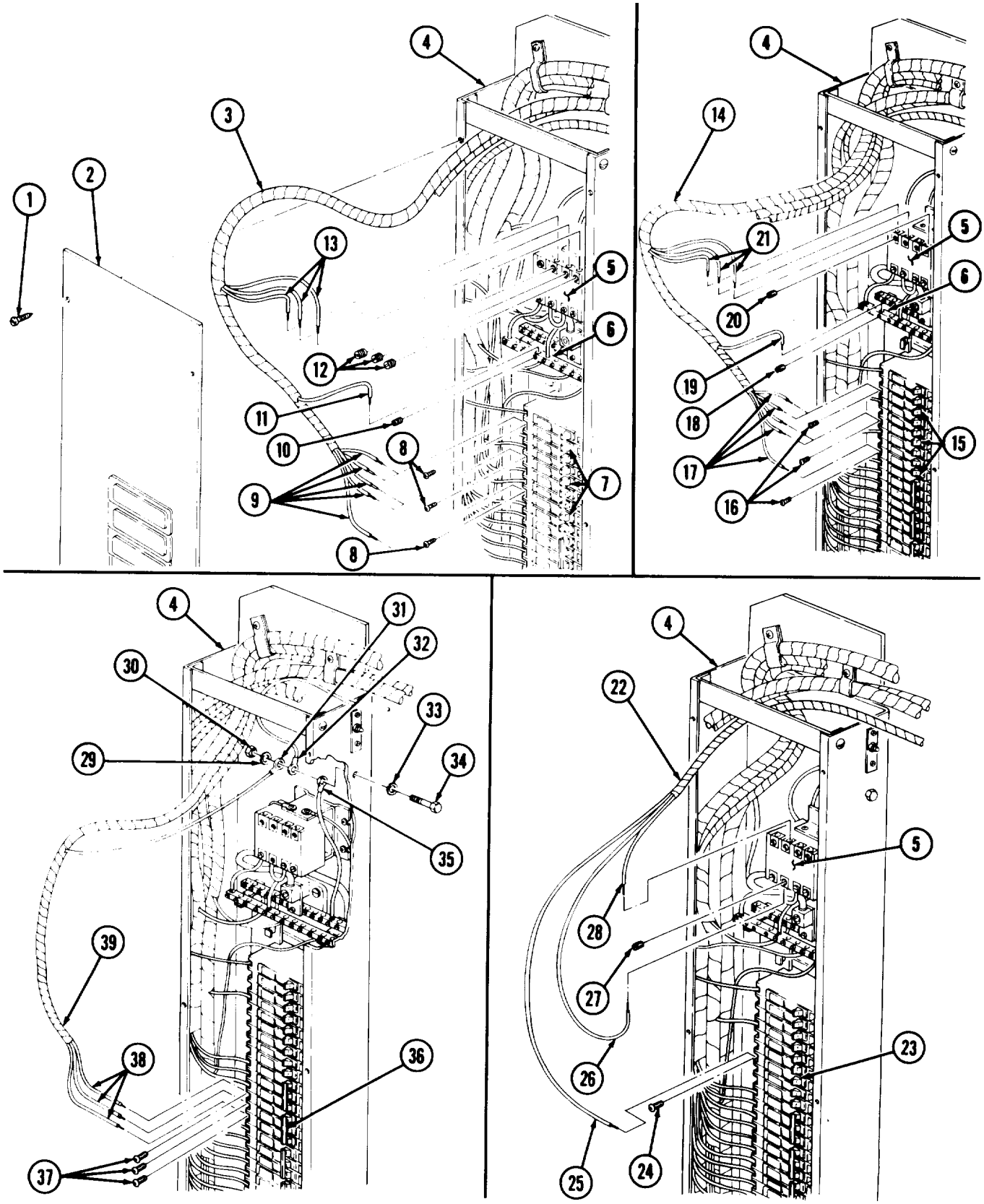

15-82. LOAD CENTER MAINTENANCE (Contd)

16. Remove setscrew (7) and wire (6) from neutral bar (2).
17. Remove three screws (4) and wires (5) from 30-amp circuit breaker (3).
18. Remove 10kW electric heater wiring harness (8) from load center (1).
19. Remove setscrew (13) and wire (14) from neutral bar (2).
20. Remove screw (11) and wire (12) from 20-amp circuit breaker (10).
21. Remove heater wiring harness (9) from load center (1).

NOTE

Perform steps 22 through 27 for M820 and M820A2 vehicles.

22. Disconnect auxiliary pump wiring harness (15) from connector (16).
23. Remove four screws (17), cover (18), and gasket (19) from outlet box (20). Discard gasket (19).
24. Desolder three wires (21) from connector (16).
25. Disconnect converter wiring harnesses (26) and (27) from connectors (29) and (25).
26. Remove eight screws (28) and cover (24) from junction box (22).
27. Desolder three wires (23) and four wires (30) from connectors (25) and (29).

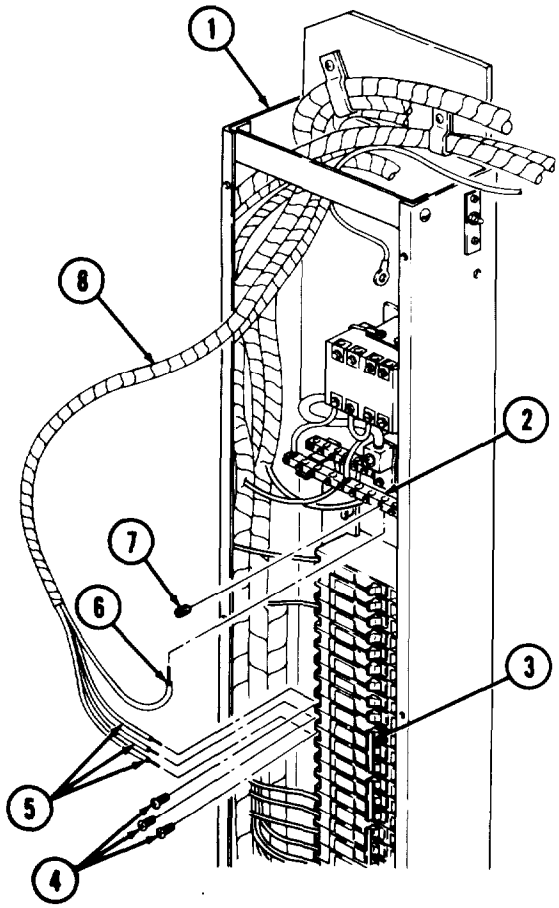

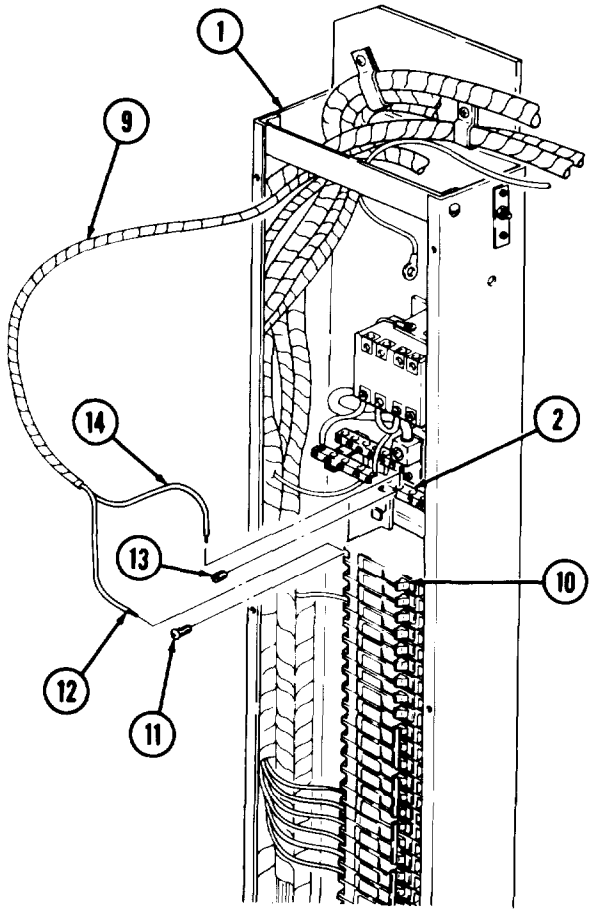

15-82. LOAD CENTER MAINTENANCE (Contd)

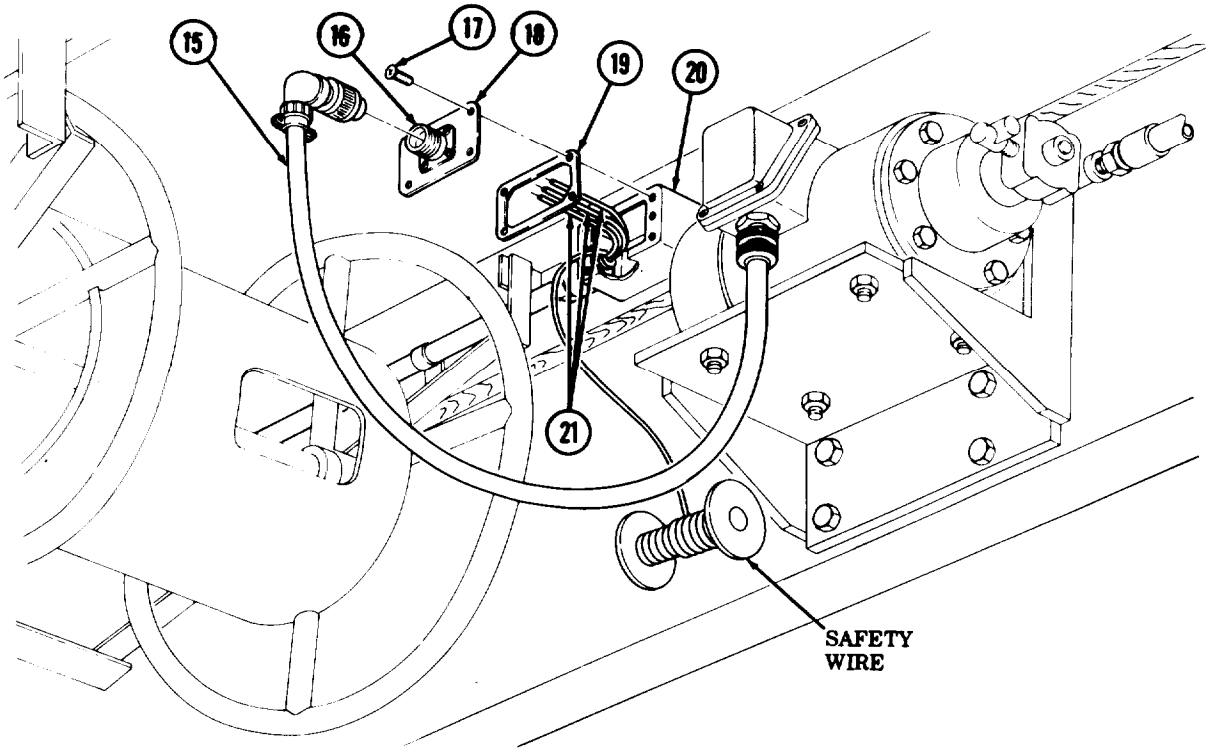

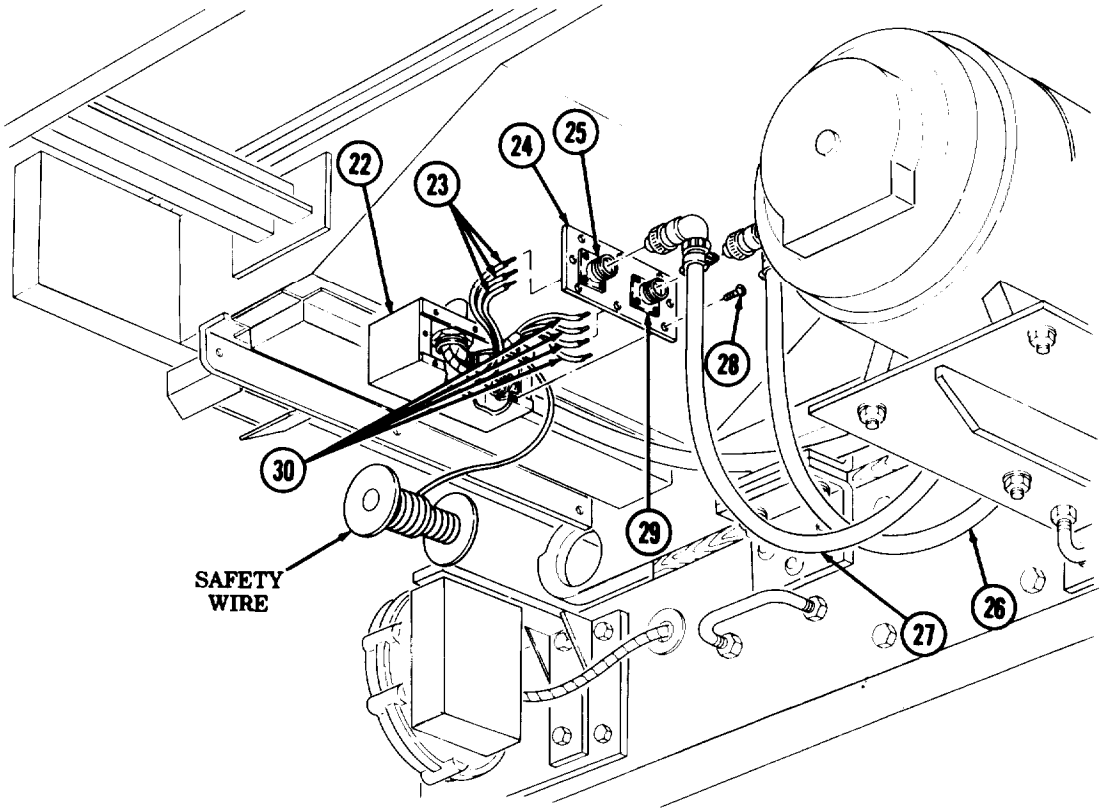

15-82. LOAD CENTER MAINTENANCE (Contd)

CAUTION

Safety wire will be used to route converter and auxiliary pump wiring harness and entrance receptacle wiring harness through van body. Connect safety wire to wiring harness with electrical tape.

NOTE

Perform steps 28 and 29 for M820 and M820A2 vehicles.

28. Remove six screws (3) and wires (4) from two 20-amp circuit breakers (2).
29. Remove converter and auxiliary pump wiring harnesses (5) from load center (1).
30. Remove setscrew (11) and wire (12) from neutral bar (7).
31. Remove three setscrews (9) and wires (10) from 100-amp circuit breaker (8).
32. Remove entrance receptacle wiring harness (6) from load center (1).

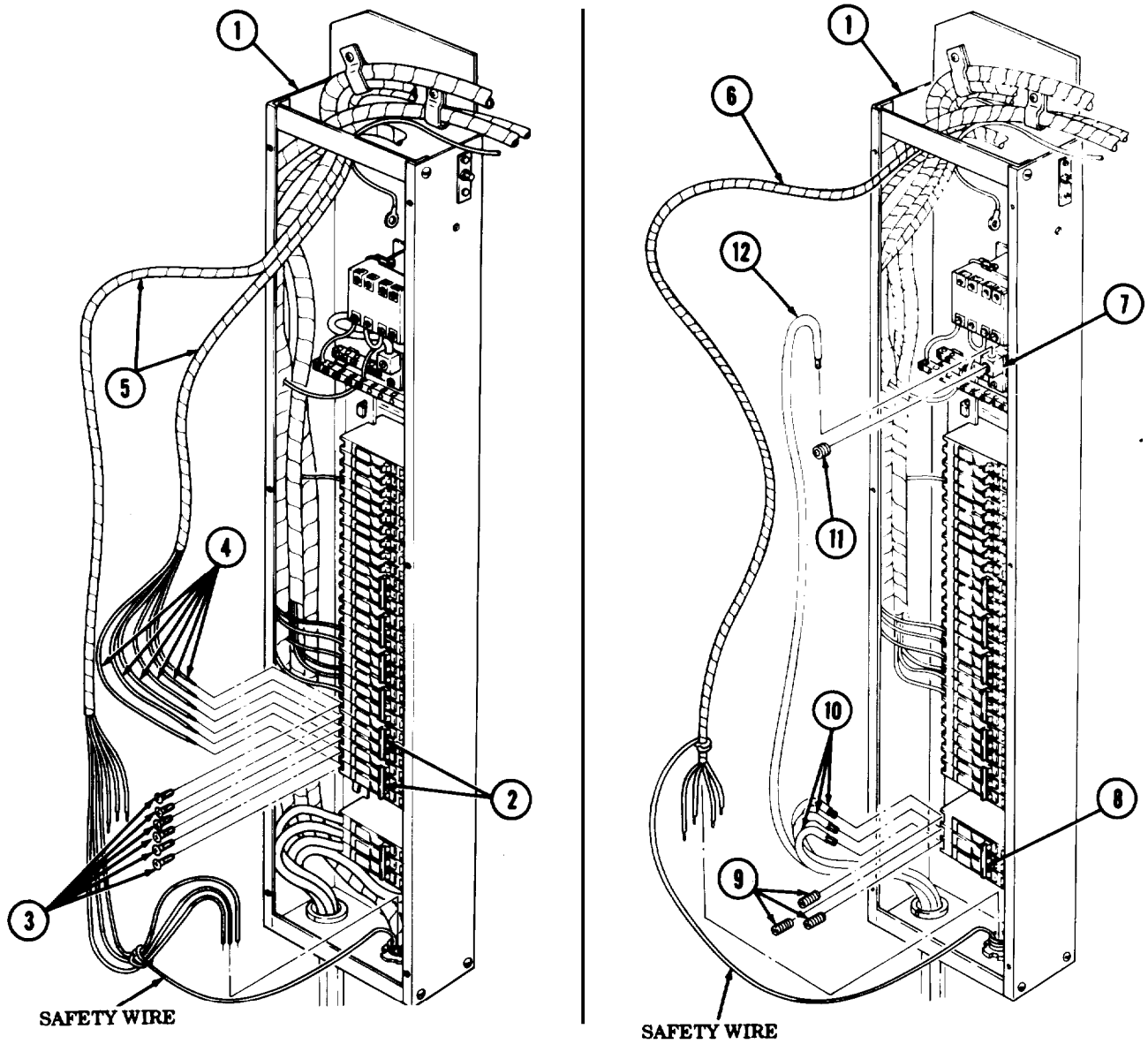

15-82. LOAD CENTER MAINTENANCE (Contd)

NOTE

Perform steps 33 through 39 for M820 and M820A2 vehicles.

33. Remove screw (22) and wire (21) from relay (20).
34. Remove two screws (14) and wires (15) from switch (17).
35. Remove setscrew (19) and wire (18) from neutral bar (7).
36. Remove right and left blackout harnesses (13) and (16) from load center (1).
37. Remove setscrew (27) and wire (26) from neutral bar (7).
38. Remove three screws (24) and wires (25) from 20-amp circuit breaker (23).
39. Remove 3-phase receptacle wiring harness (28) from load center (1).

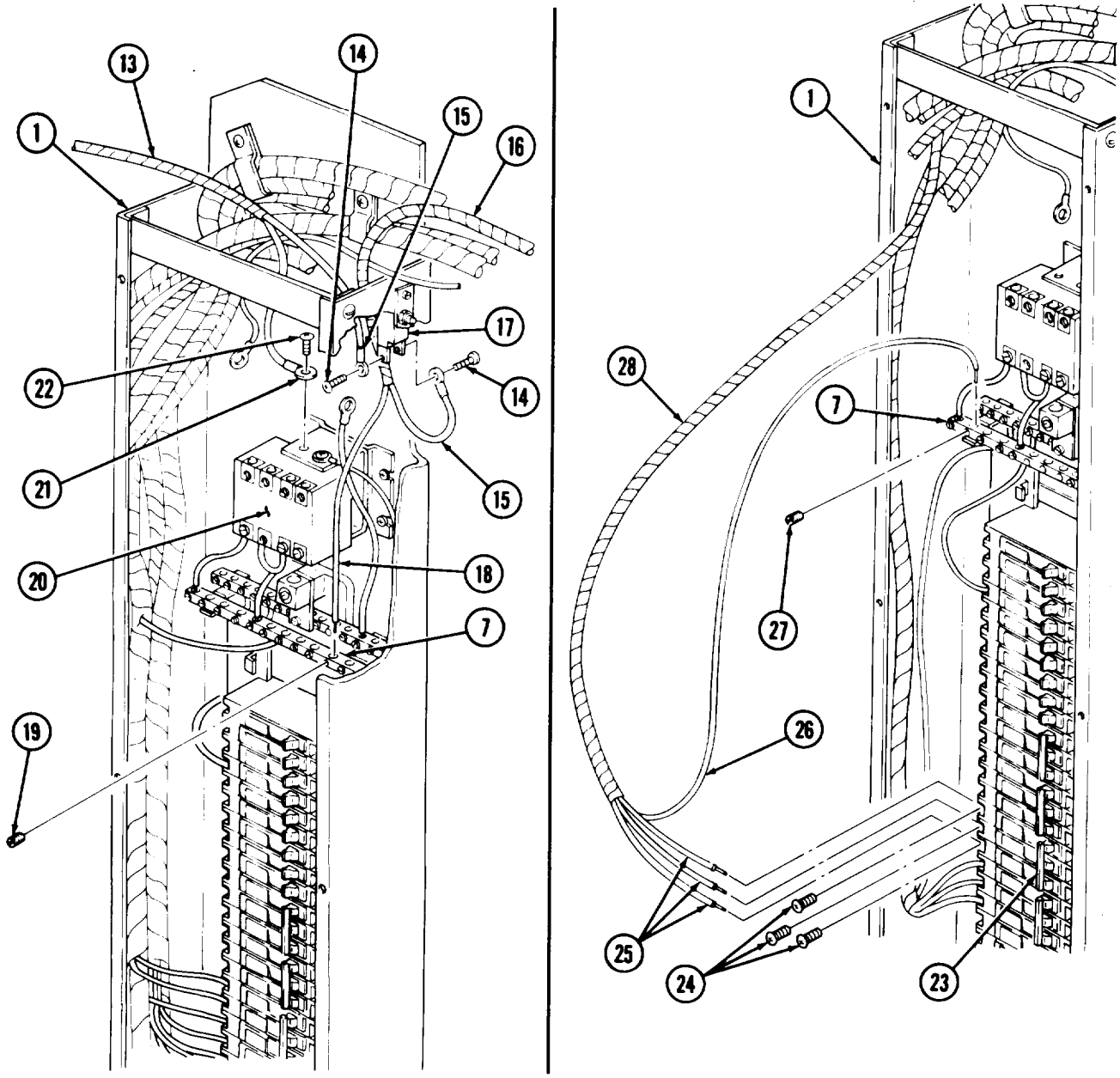

15-82. LOAD CENTER MAINTENANCE (Contd)

NOTE

Perform steps 40 through 42 for M820 and M820A2 vehicles.

40. Remove setscrew (6) and wire (7) from neutral bar (2).
41. Remove three screws (4) and wires (5) from 20-amp circuit breaker (3).
42. Remove 3-phase receptacle wiring harness (8) from load center (1).
43. Remove nut (13) from conduit (12).
44. Remove four screws (9), lockwashers (10), and load center (1) from van body (11).

b. Disassembly

1. Remove six plates (15) from cover (14).
2. Remove two screws (36), three tires (19), screw (39), and tire (38) from relay (37).
3. Remove three setscrews (21), two wires (19), and wire (16) from neutral bar (20).
4. Remove setscrew (34) and tire (38) from 20-amp circuit breaker (35).
5. Remove three screws (40), lockwasher (41), and relay (37) from load center (1). Discard lockwashers (41).
6. Remove six screws (25) and insulators (26) from load center (1).
7. Remove nine screws (33) and 20-amp circuit breakers (35) from load center (1).
8. Remove three screws (31) and 30-amp circuit breaker (32) from load center (1).
9. Remove three screws (29) and 40-amp circuit breaker (30) from load center (1).
10. Remove twelve screws (28) and four 20-amp circuit breakers (27) from load center (1).
11. Remove three screws (23) and 100-amp circuit breaker (24) from load center (1).
12. Remove grommet (22) from load center (1).
13. Remove two screws (18) and blackout door switch (17) from load center (1).

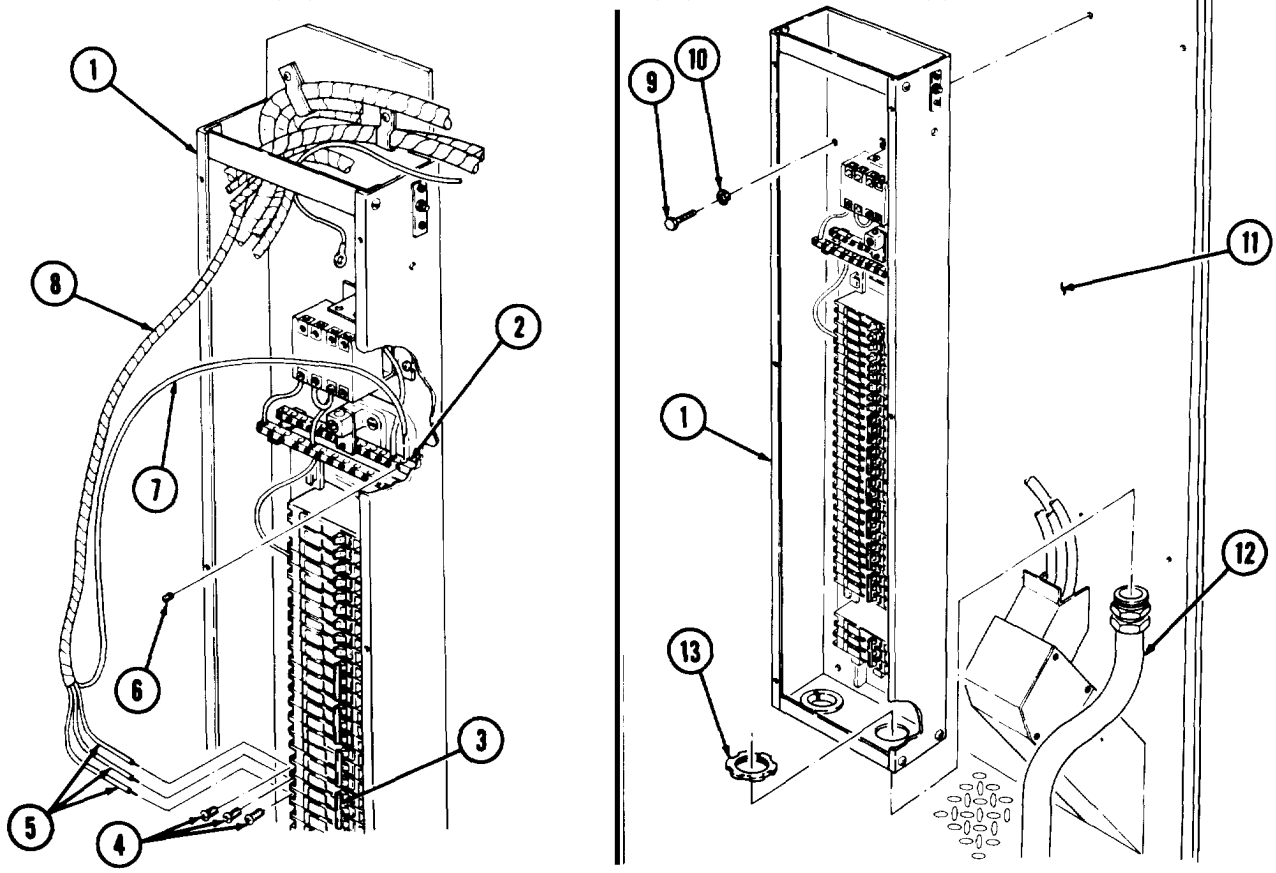

15-82. LOAD CENTER MAINTENANCE (Contd)

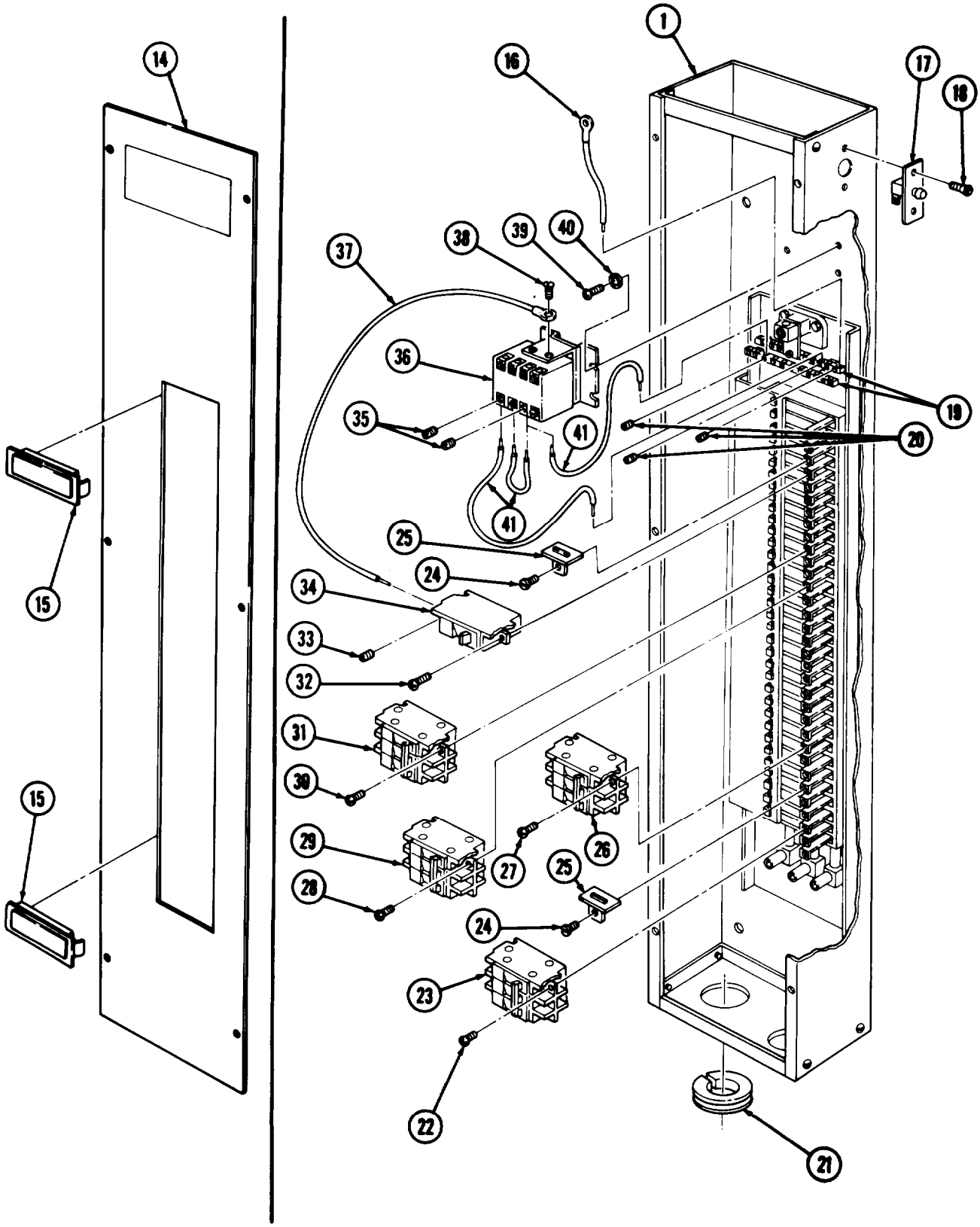

15-82. LOAD CENTER MAINTENANCE (Contd)

c. Assembly

1. Install blackout door switch (3) on load center (2) with two screws (4).
2. Install grommet (8) in load center (2).
3. Install 100-amp circuit breaker (10) in load center (2) with three screws (11).
4. Install four 20-amp circuit breakers (14) in load center (2) with twelve screws (13).
5. Install 40-amp circuit breaker (16) in load center (2) with three screws (15).
6. Install 30-amp circuit breaker (18) in load center (2) with three screws (17).
7. Install nine 20-amp circuit breakers (21) in load center (2) with nine screws (19).
8. Install six insulators (9) in load center (2) with six screws (12).
9. Install relay (23) in load center (2) with three new lockwashers (27) and screws (26).
10. Install wire (24) in 20-amp circuit breaker (21) with setscrew (20).
11. Install two wires (7) and wire (1) in neutral bar (5) with three setscrews (6).
12. Install wire (24) in relay (23) with screw (25).
13. Install three wires (7) in relay (23) with two setscrews (22).
14. Install six plates (29) on cover (28).

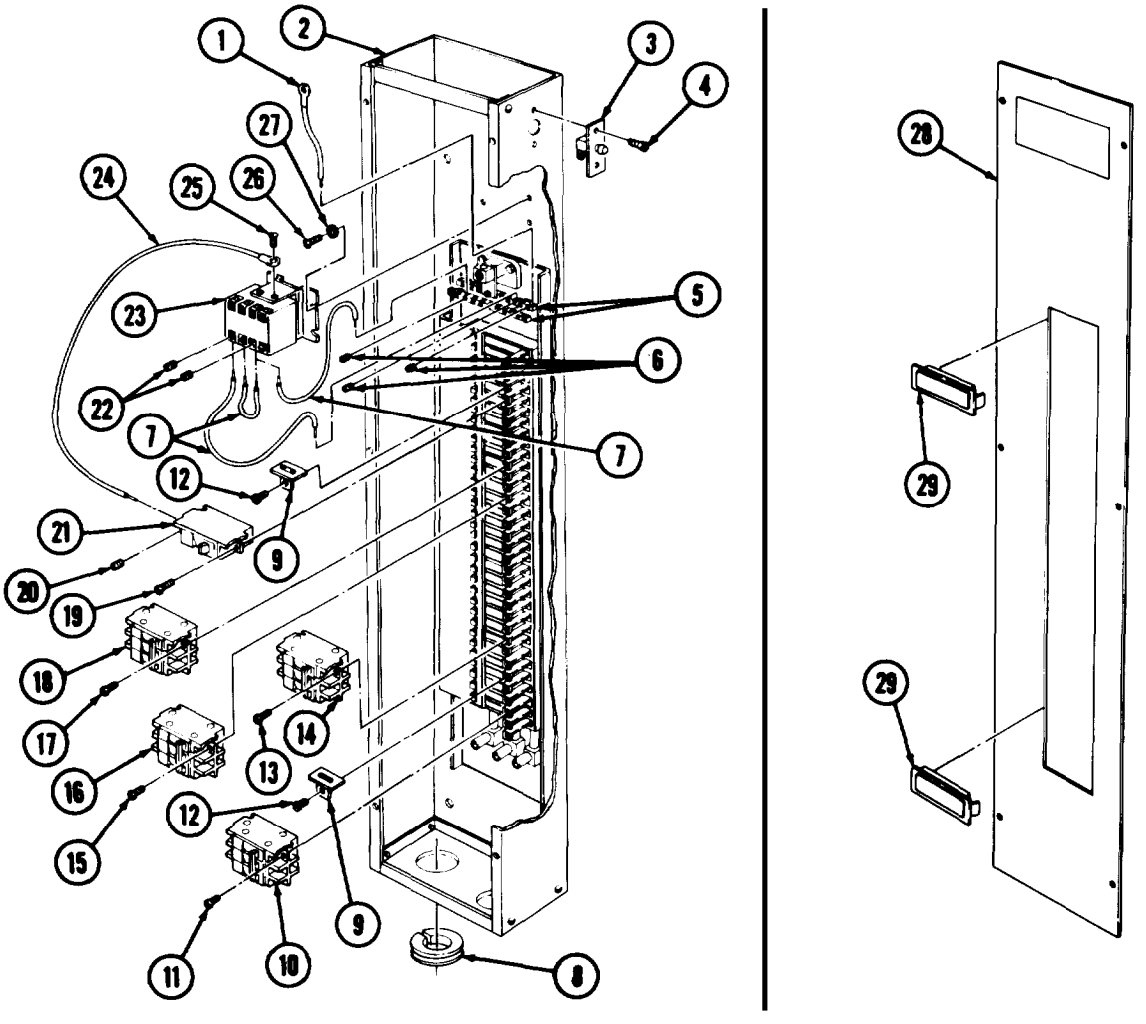

15-82. LOAD CENTER MAINTENANCE (Contd)

d. Installation

1. Install load center (2) on van body (32) with four new lockwashers (31) and screws (30).
2. Install nut (34) on conduit (33).

NOTE

Perform steps 3 through 5 for M820 and M820A2 vehicles.

3. Position 3-phase receptacle wiring harness (35) in load center (2).
4. Install three wires (39) in 20-amp circuit breaker (37) with three screws (38).
5. Install wire (41) on neutral bar (36) with setscrew (40).

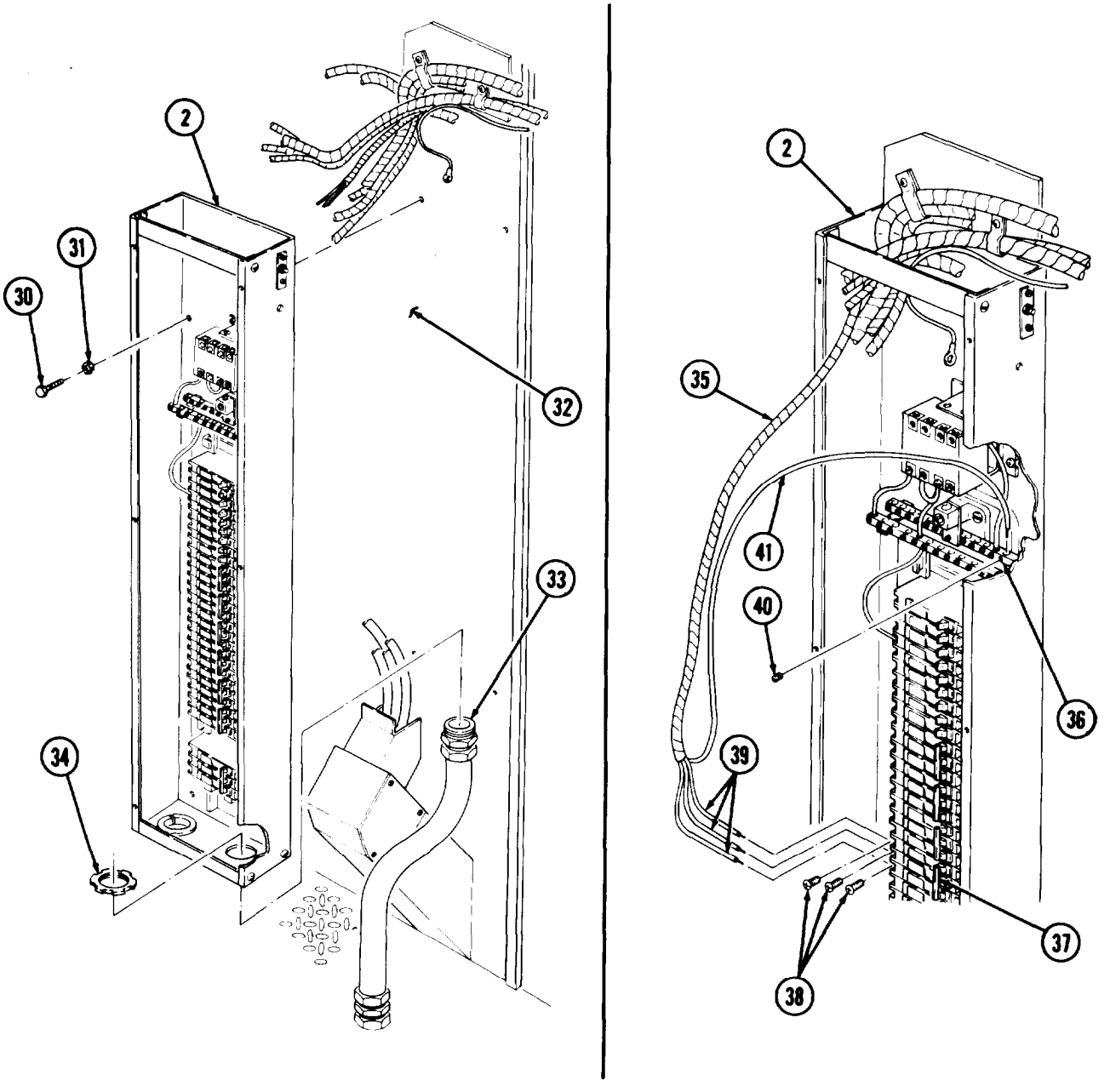

15-82. LOAD CENTER MAINTENANCE (Contd)

NOTE

Perform steps 6 through 10 for M820 and M820A2 vehicles.

6. Position 3-phase receptacle wiring harness (8) in load center (1).
7. Install three wires (5) on 20-amp circuit breaker (3) with three screws (4).
8. Install wire (6) in neutral bar (2) with setscrew (7).
9. Position right and left blackout harnesses (9) and (11) in load center (1).
10. Install wire (15) in neutral bar (2) with setscrew (16).
11. Install wires (13) and (14) on switch (12) with two screws (10).
12. Install wire (18) on relay (17) with screw (19).

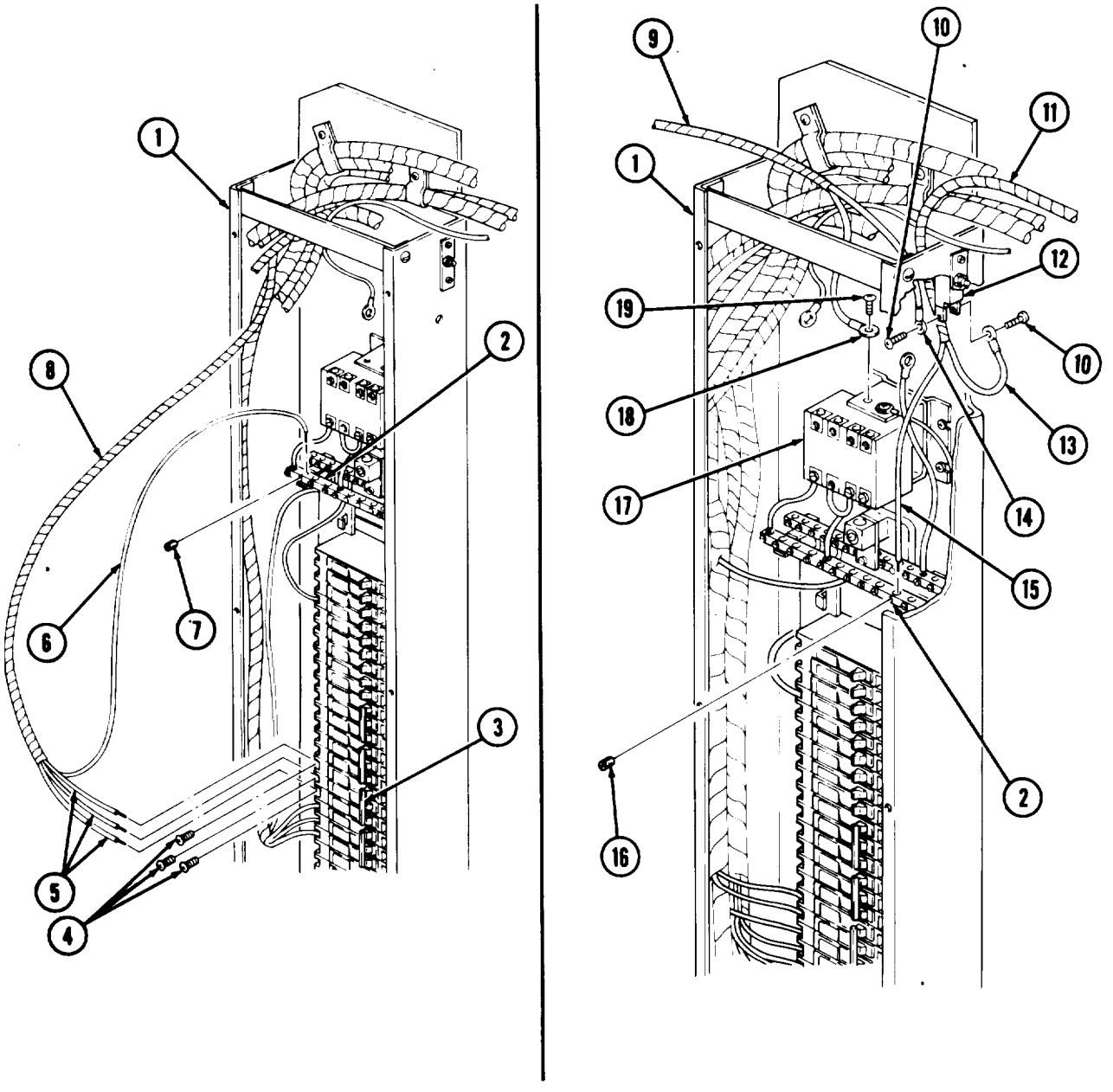

15-82. LOAD CENTER MAINTENANCE (Contd)

NOTE

Perform steps 13 through 18 for M820 and M820A2 vehicles.

13. Position entrance receptacle wiring harness (20) in load center (1).
14. Install three wires (23) on 100-amp circuit breaker (21) with three setscrews (22).
15. Install wire (25) in neutral bar (2) with setscrews (24).
16. Position converter and auxiliary pump wiring harness (26) in load center (1).
17. Route converter and auxiliary pump wiring harness (26) through conduit (28).
18. Install six wires (30) in two 20-amp circuit breakers (27) with six screws (29).

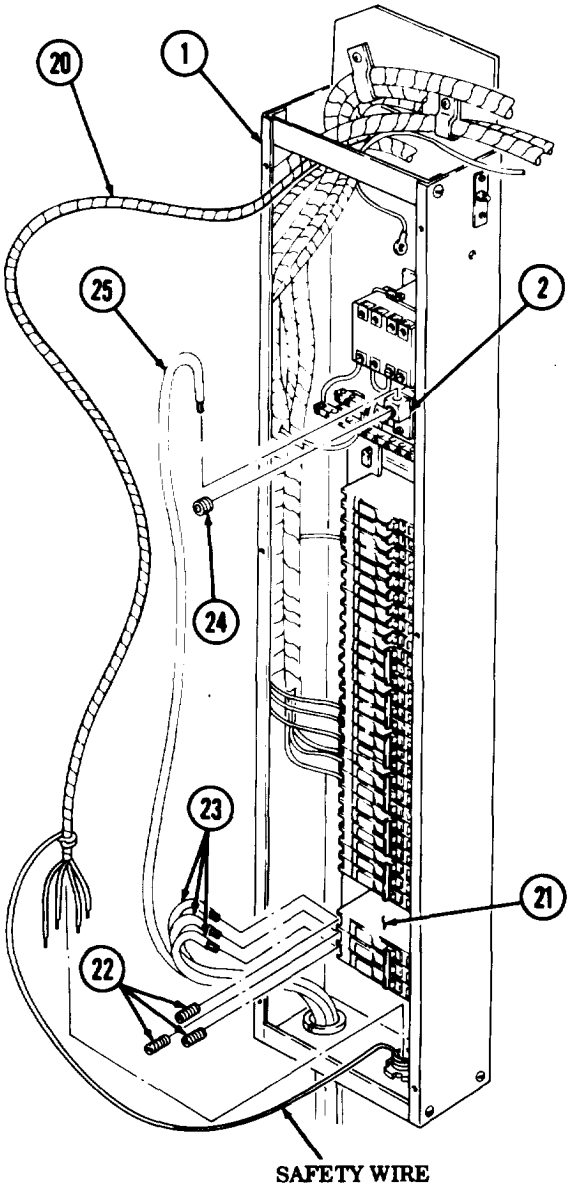

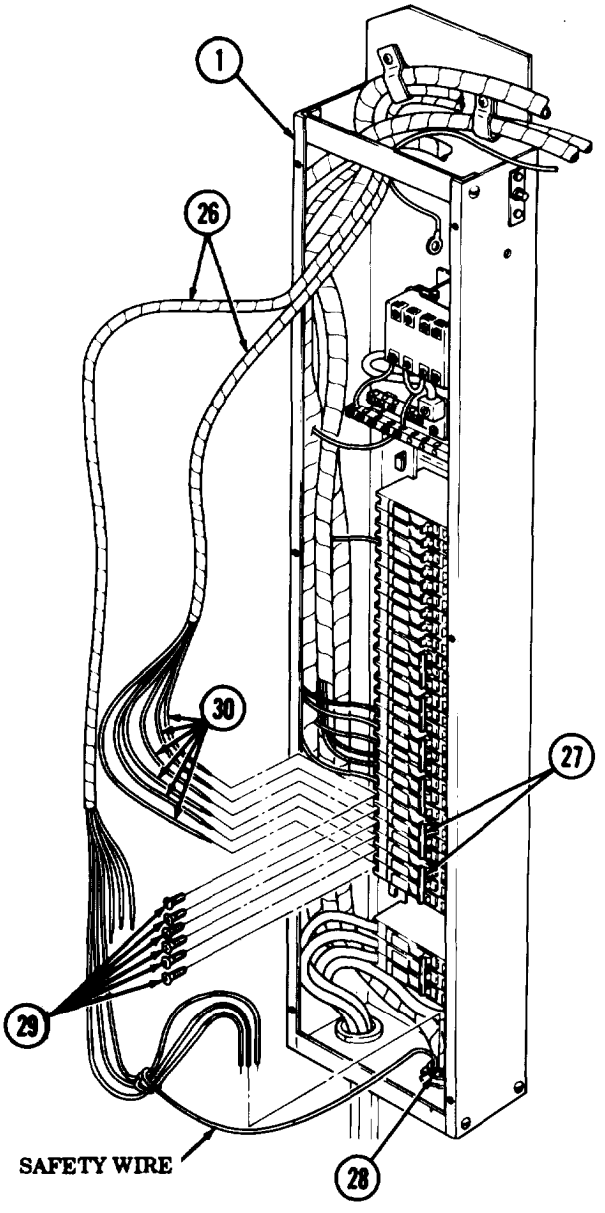

15-82. LOAD CENTER MAINTENANCE (Contd)

19. Solder three wires (2) and four wires (9) to connectors (4) and (8).

NOTE

Apply sealing compound to cover.

20. Install cover (3) on junction box (1) with eight screws (7).
21. Connect converter wiring harnesses (5) and (6) to connectors (8) and (4).
22. Position new gasket (14) on outlet box (15) and solder three wires (16) to connector (11).
23. Install gasket (14) and cover (13) on outlet box (15) with four screws (12).
24. Connect auxiliary pump wiring harness (10) to connector (11).
25. Position heater wiring harness (24) in load center (17).
26. Install wire (23) in neutral bar (18) with setscrew (22).
27. Install wire (21) in 20-amp circuit breaker (19) with screw (20).
28. Position 10kW electric heater wiring harness (30) in load center (17).
29. Install wire (28) in neutral bar (18) with setscrew (29).
30. Install three wires (27) in 30-amp circuit breaker (25) with three screws (26).

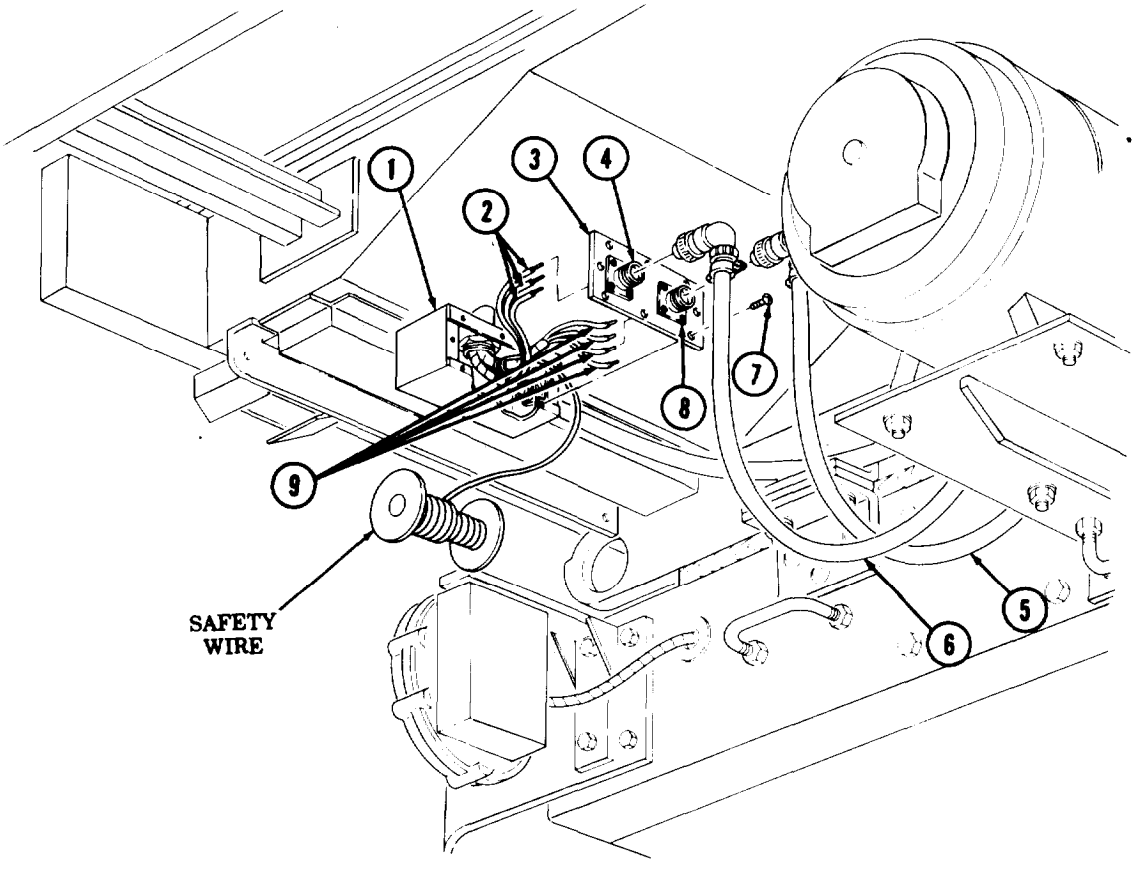

15-82. LOAD CENTER MAINTENANCE (Contd)

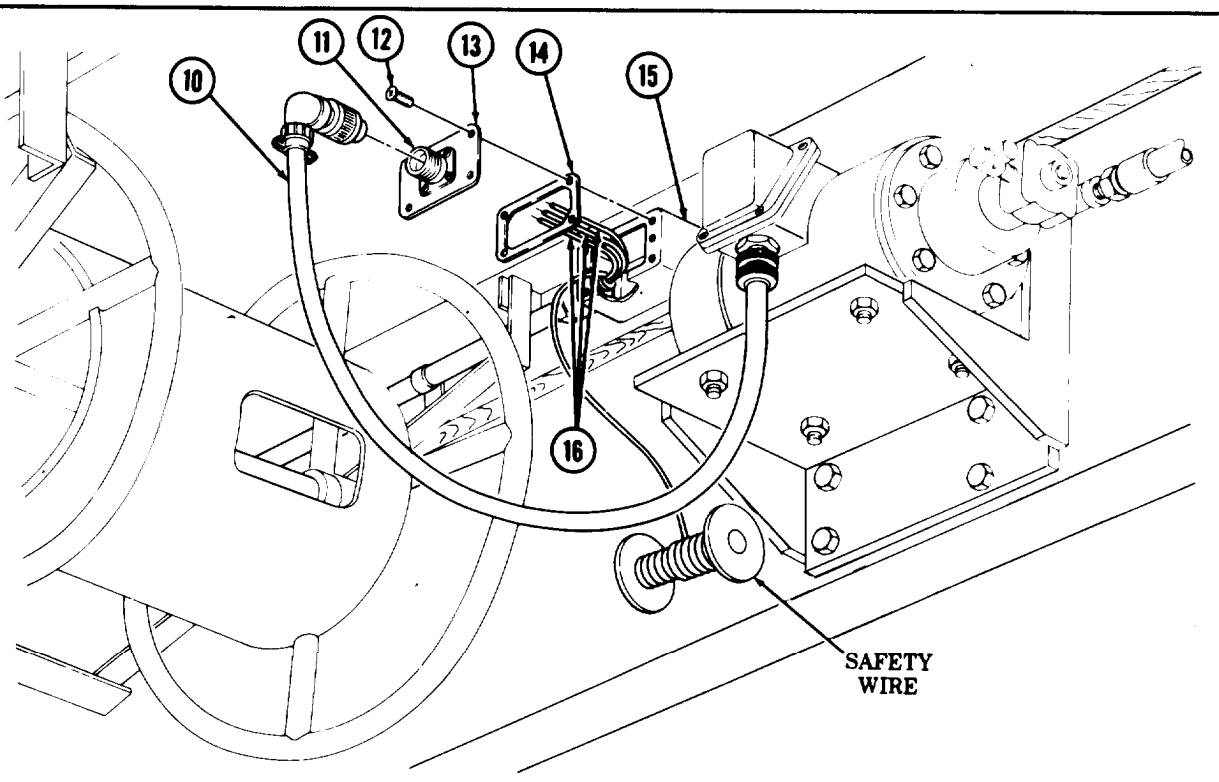

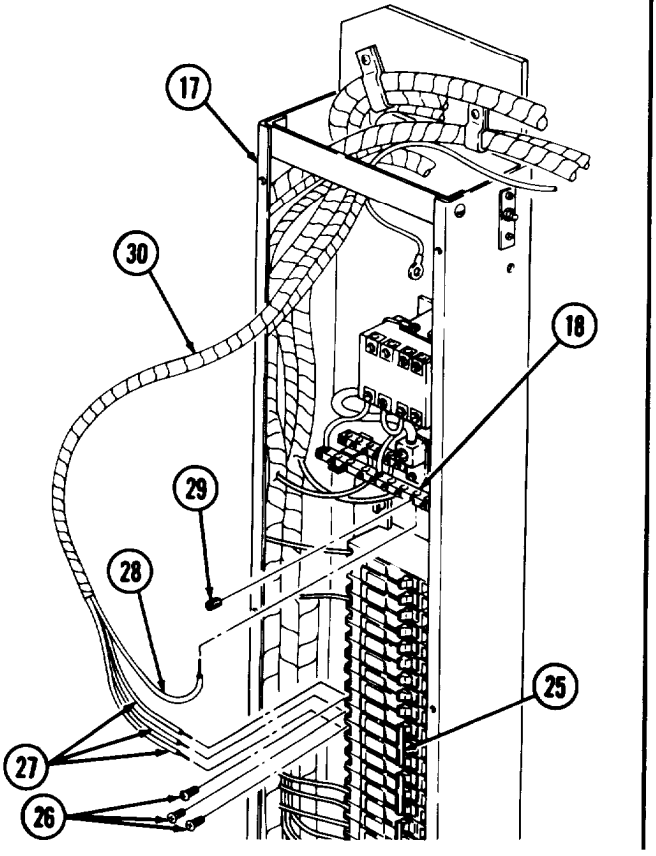

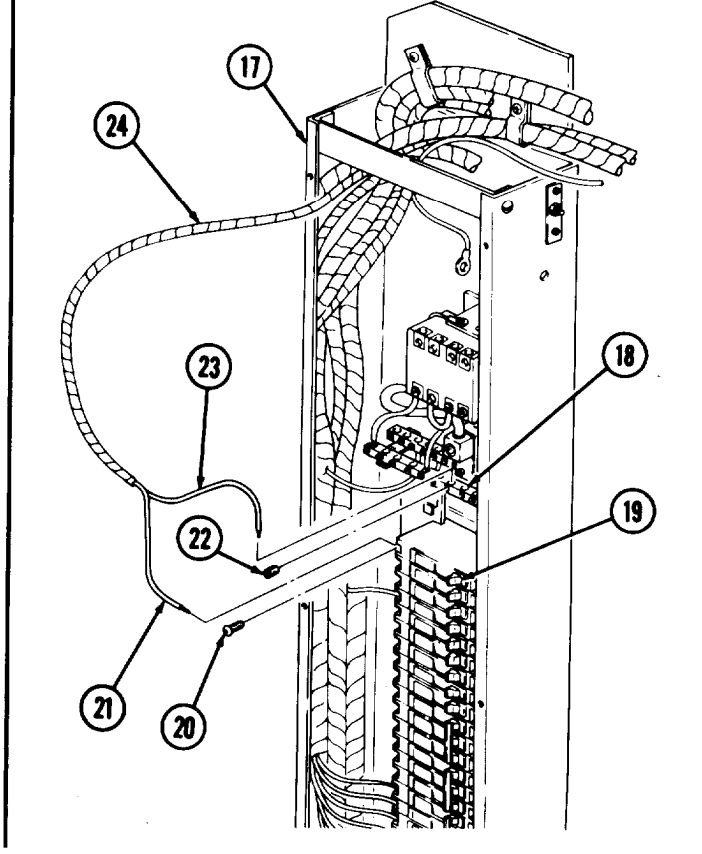

15-82. LOAD CENTER MAINTENANCE (Contd)

31. Position air conditioner wiring harness (11) in load center (7).
32. Install three wires (10) in 20-amp circuit breaker (8) with three setscrews (9).
33. Install three wires (12), (3), and (6) with new lockwasher (4), screw (5), new lockwasher (2), and nut (1).

NOTE

Perform steps 34 through 37 for M820 and M820A2 vehicles.

34. Position blackout bypass wiring harness (13) in load center (7).
35. Install wire (18) in relay (14) with setscrew (19).
36. Position wire (20) in relay (14).
37. Install wire (17) in 20-amp circuit breaker (15) with screw (16).
38. Position main wiring harness (22) in load center (7).
39. Install five wires (26) in three 20-amp circuit breaker (24) with three screws (25).
40. Install wire (28) in neutral bar (23) with setscrew (27).
41. Install wire (30) in relay (14) with setscrew (28).
42. Position two wires (21) in relay (14).
43. Position main wiring harness (33) in load center (7).
44. Install five wires (36) in three circuit breakers (34) with three screws (35).
45. Install wire (38) in neutral bar (23) with setscrew (37).
46. Install three wires (40) in relay (14) with three setscrews (39).
47. Install cover (32) on load center (7) with six screws (31).

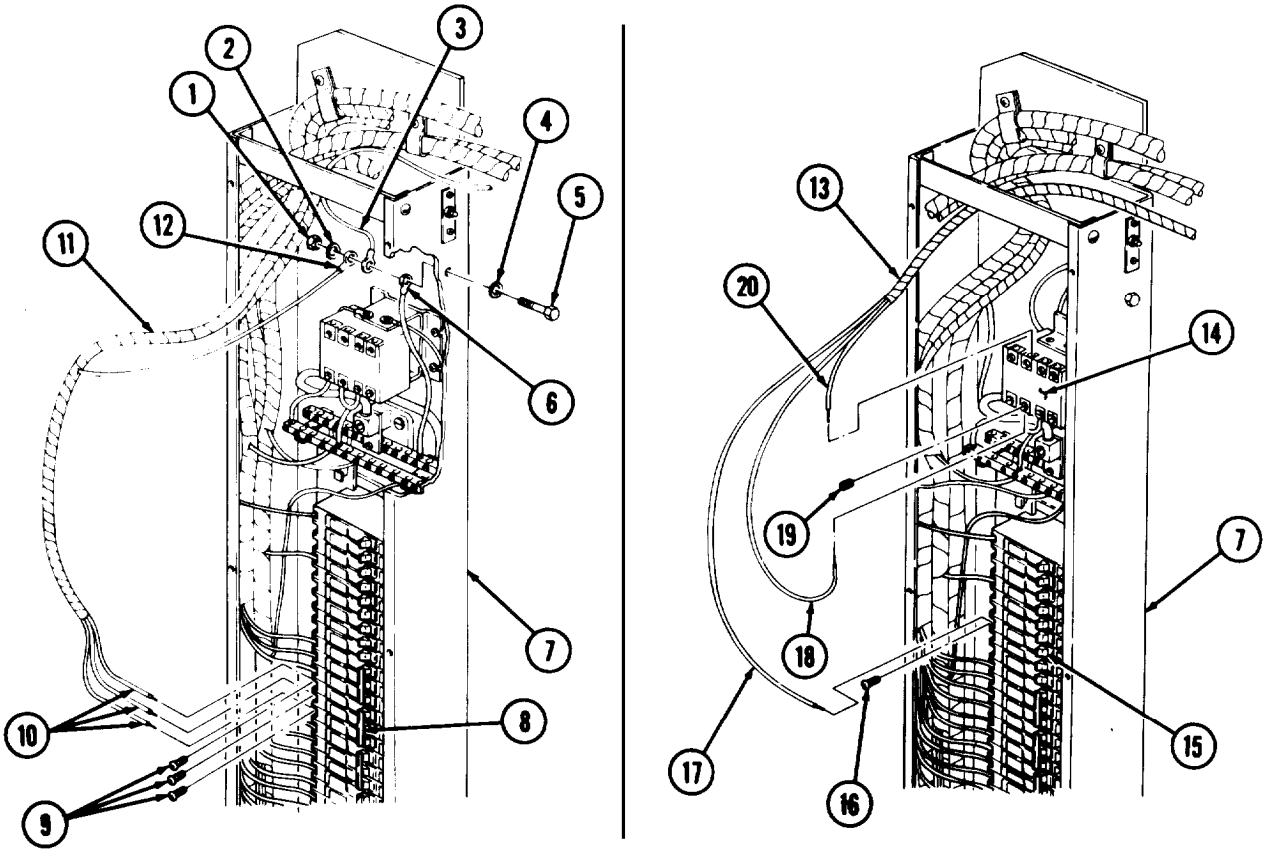

15-82. LOAD CENTER MAINTENANCE (Contd)

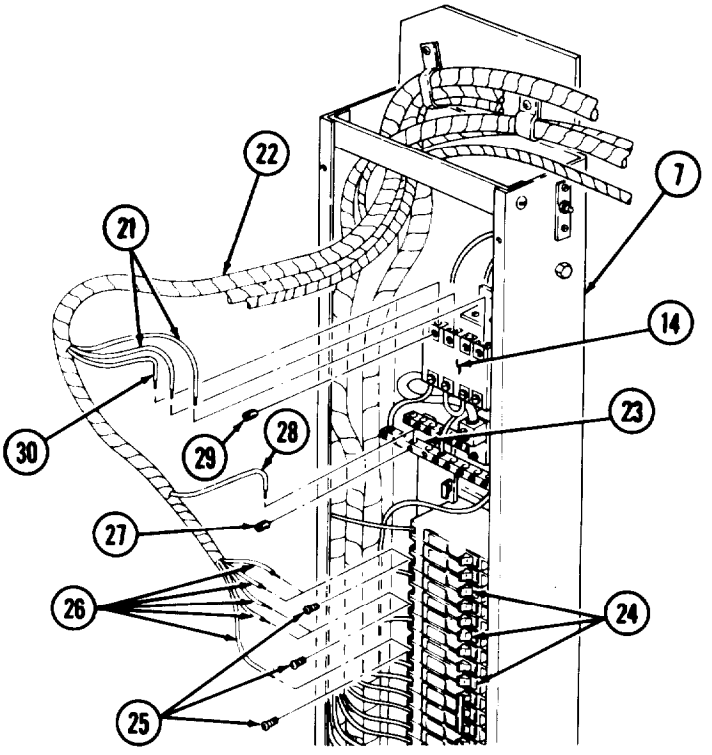

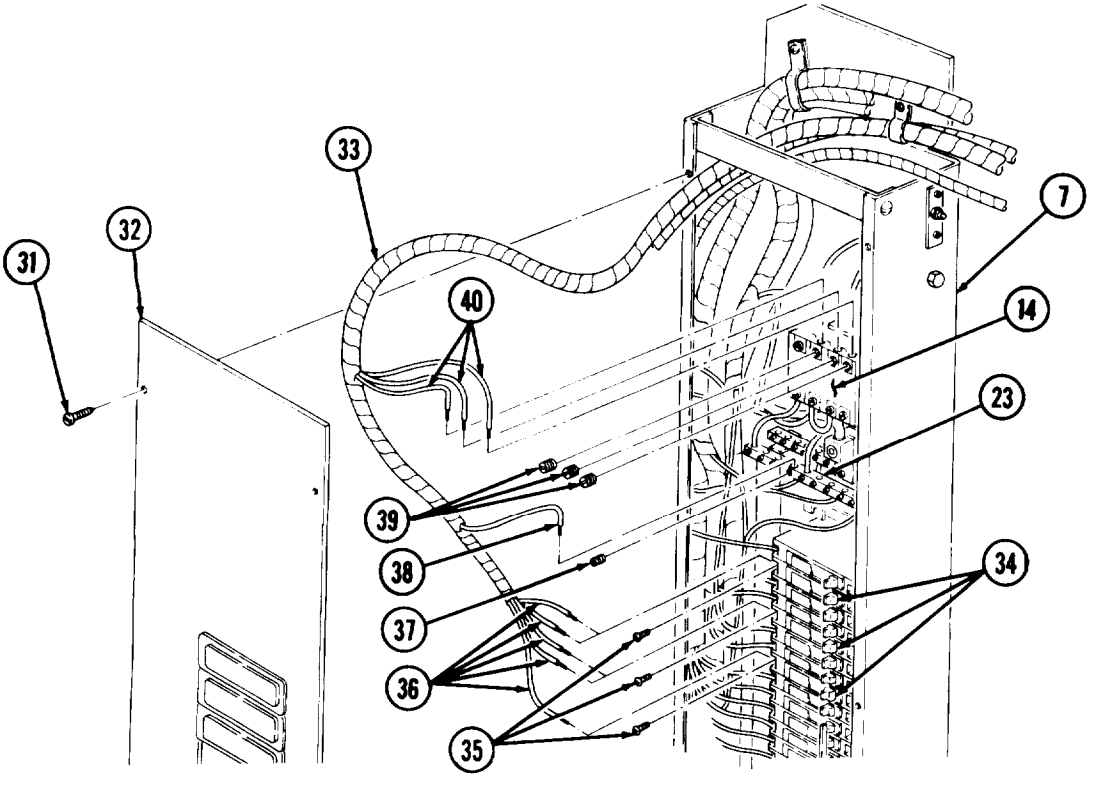

FOLLOW-ON TASKS: • Connect battery ground cable (TM 9-2320-260-20).
• Connect external power source (TM 9-2320-260-10).

15-83. LOAD CENTER CONDUIT REPLACEMENT

THIS TASK COVERS:

a. Removal **b. Installation**

INITIAL SETUP

APPLICABLE MODELS
M820, M820A2

TEST EQUIPMENT
Multimeter (Appendix B, Item 115)

TOOLS
General mechanic's tool kit (Appendix B, Item 1)
Tool kit, electrical (Appendix B, Item 106)
Soldering gun (Appendix B, Item 117)

MATERIALS/PARTS
Gasket (Appendix D, Item 76)
Safety wire (Appendix D, Item 372)

MATERIALS/PARTS (Contd)
Electrical tape (Appendix C, Item 51)
Solder (Appendix C, Item 47)
Sealing compound (Appendix C, Item 43)

REFERENCES (TM)
TM 9-2320-260-10
TM 9-2320-260-20
TM 9-2320-260-34P-2

EQUIPMENT CONDITION
- External power source disconnected (TM 9-2320-260-10).
- Battery ground cable disconnected (TM 9-2320-260-20).

a. Removal

NOTE

Tag wires, cables, and leads for installation.

1. Disconnect wiring harness (7) from connector (1).
2. Remove four screws (2), cover (3), and gasket (4) from outlet box (5). Discard gasket (4).
3. Desolder three wires (6) from connector (1).
4. Disconnect wiring harnesses (12) and (13) from connectors (15) and (11).
5. Remove eight screws (14) and cover (10) from junction box (8).
6. Desolder four wires (16) and three wires (9) from connectors (15) and (11).
7. Remove six screws (17) and cover (29) from load center (22).

CAUTION

Use care when replacing wiring harness. Excessive snagging or pulling may damage wiring harness.

NOTE

- Safety wire will be used to install new wiring harness. Do not cut safety wire from spool until wiring harness has been pulled through and proper length has been obtained.
- Safety wire must be attached to wires with electrical tape.

8. Remove auxiliary pump wiring harness (20) and converter wiring harness (21) from conduit (25).
9. Remove coupling (24), nipple (19), and nut (18) from load center (22) and conduit (25).
10. Remove nut (26), nipple (27), nut (28), and conduit (25) from conduit (23).

15-83. LOAD CENTER CONDUIT REPLACEMENT (Contd)

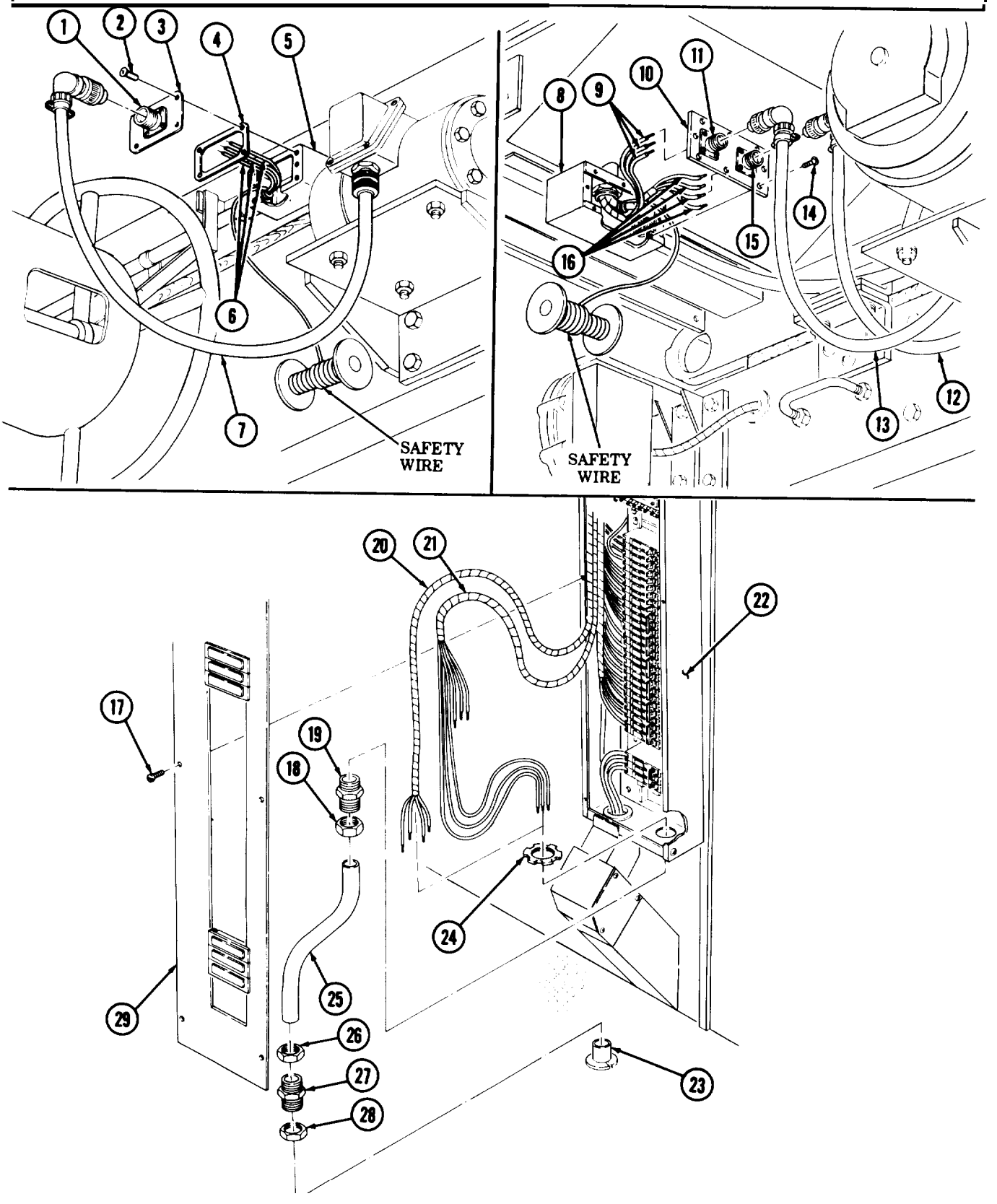

15-83. LOAD CENTER CONDUIT REPLACEMENT (Contd)

b. Installation

1. Install conduit (10) on conduit (8) with nut (13), nipple (12), and nut (11).
2. Install conduit (10) on load center (6) with nut (2), nipple (3), and coupling (9).
3. Position auxiliary pump wiring harness (4) and converter wiring harness (5) in van body (7). Ensure auxiliary pump wiring harness (4) and converter wiring harness (5) are routed through conduit (10).
4. Install cover (14) on load center (6) with six screws (1).
5. Solder four wires (23) and three wires (16) to connectors (22) and (18).

NOTE

Apply sealing compound to cover.

6. Install cover (17) on junction box (15) with eight screws (21).
7. Connect wiring harnesses (19) and (20) to connectors (22) and (18).
8. Solder three wires (30) to connector (25).
9. Install new gasket (28) and cover (27) on outlet box (29) with four screws (26).
10. Connect wiring harness (24) to connector (25).

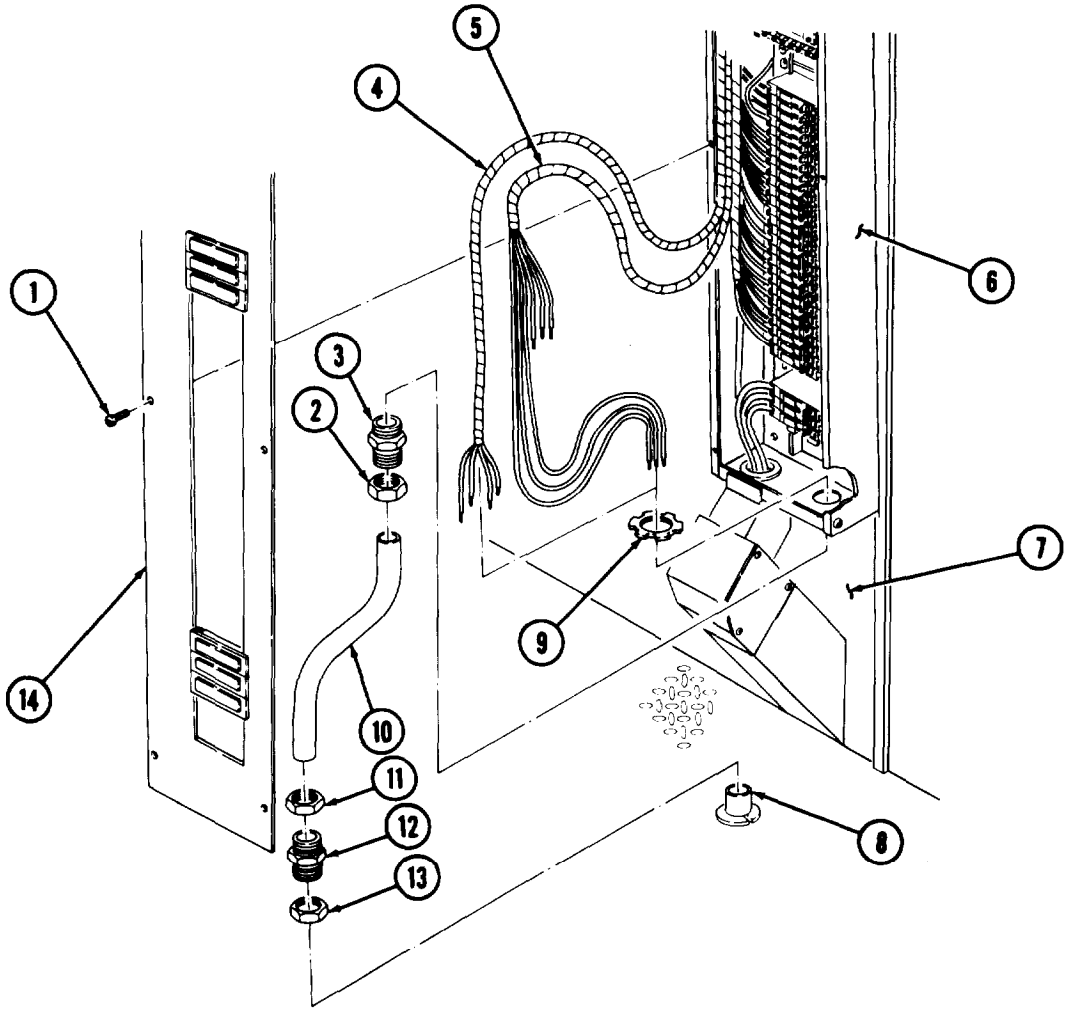

15-83. LOAD CENTER CONDUIT REPLACEMENT (Contd)

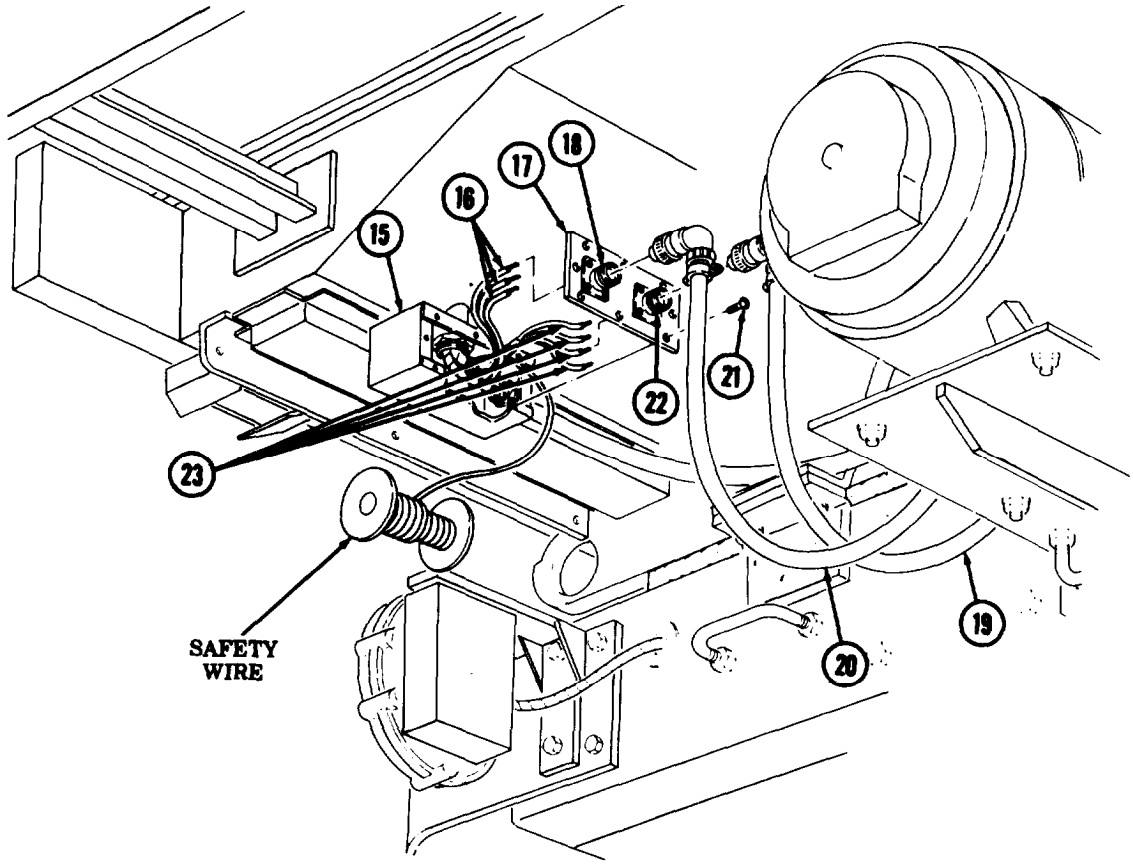

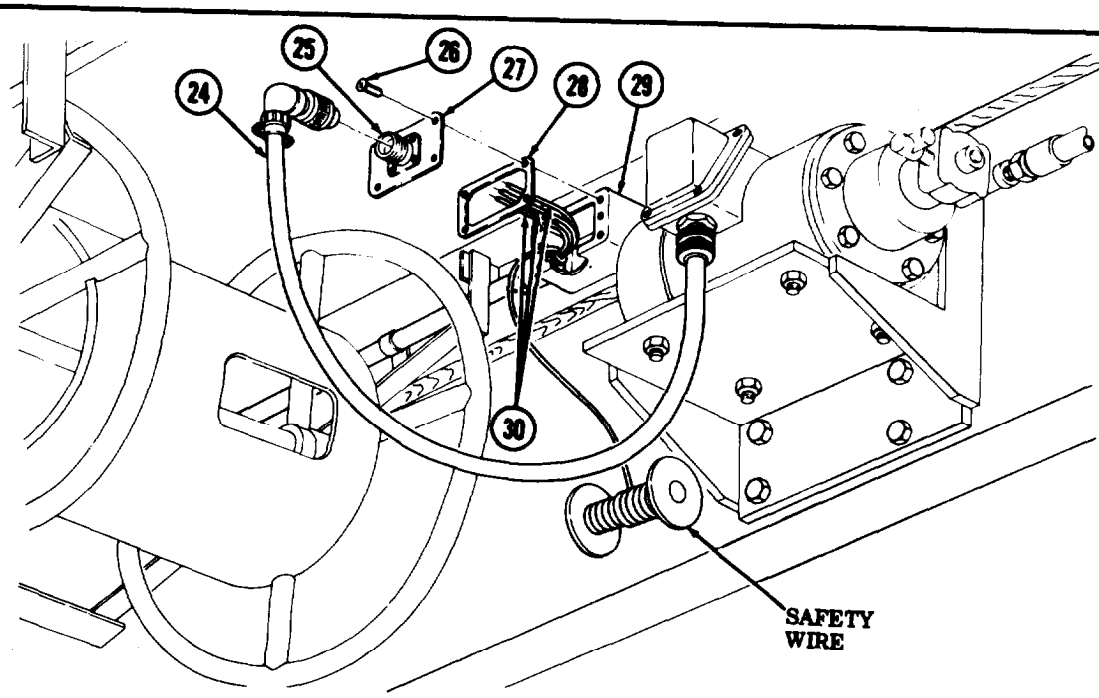

FOLLOW-ON TASKS: • Connect battery ground cable (TM 9-2320-260-20).
• Connect external power source (TM 9-2320-260-10),

15-84. CONTROL CENTER BOX MAINTENANCE

THIS TASK COVERS:

a. Removal
b. Disassembly
c. Assembly
d. Installation

INITIAL SETUP

APPLICABLE MODELS
M820, M820A2

TEST EQUIPMENT
Multimeter (Appendix B, Item 115)

TOOLS
General mechanic's tool kit (Appendix B, Item 1)
Tool kit, electrical (Appendix B, Item 106)

MATERIALS/PARTS
Four lockwashers (Appendix D, Item 224)

REFERENCES (TM)
TM 9-2320-260-10
TM 9-2320-260-20
TM 9-2320-260-34P-2

EQUIPMENT CONDITION
- External power source disconnected (TM 9-2320-260-10).
- Battery ground cable disconnected (TM 9-2320-260-20).
- Heater thermostat and 10 kW heater thermostat removed (TM 9-2320-260-20).
- AC manual starter switches removed (para. 15-89).

a. Removal

NOTE

Tag wires, cables, and leads for installation.

1. Remove eight screws (4) and covers (5) and (7) from control center box (10).
2. Remove three screws (3) and wires (2) from terminal board (1).
3. Remove three screws (6) and wires (8) from circuit breaker (9).

CAUTION

Use care when removing wiring harness. Excessive snagging or pulling may damage wiring harness.

4. Pull wiring harnesses (14) and (15) through control center box (10).
5. Remove four screws (12), lockwashers (11), and control center box (10) from van body (13). Discard lockwashers (11).

b. Disassembly

1. Remove three screws (16) and wires (18) from terminal board (1).
2. Loosen three screws (17) and remove three wires (18) from circuit breaker (9).
3. Remove four screws (23) and terminal board (1) from control center box (10).
4. Remove circuit breaker (9) from circuit breaker mounting base (21).
5. Remove two screws (22) and circuit breaker mounting base (21) from control center box (10).
6. Remove two nuts (20) and nipples (19) from control center box (10).

15-84. CONTROL CENTER BOX MAINTENANCE (Contd)

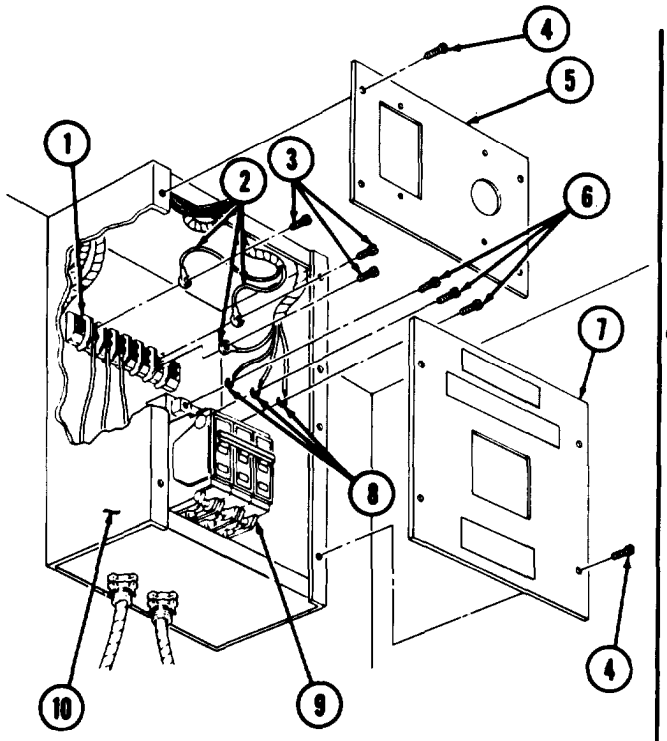

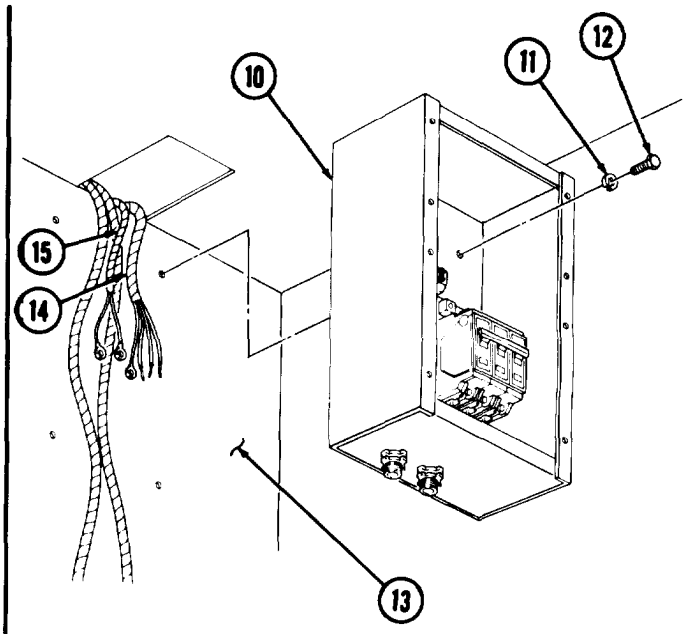

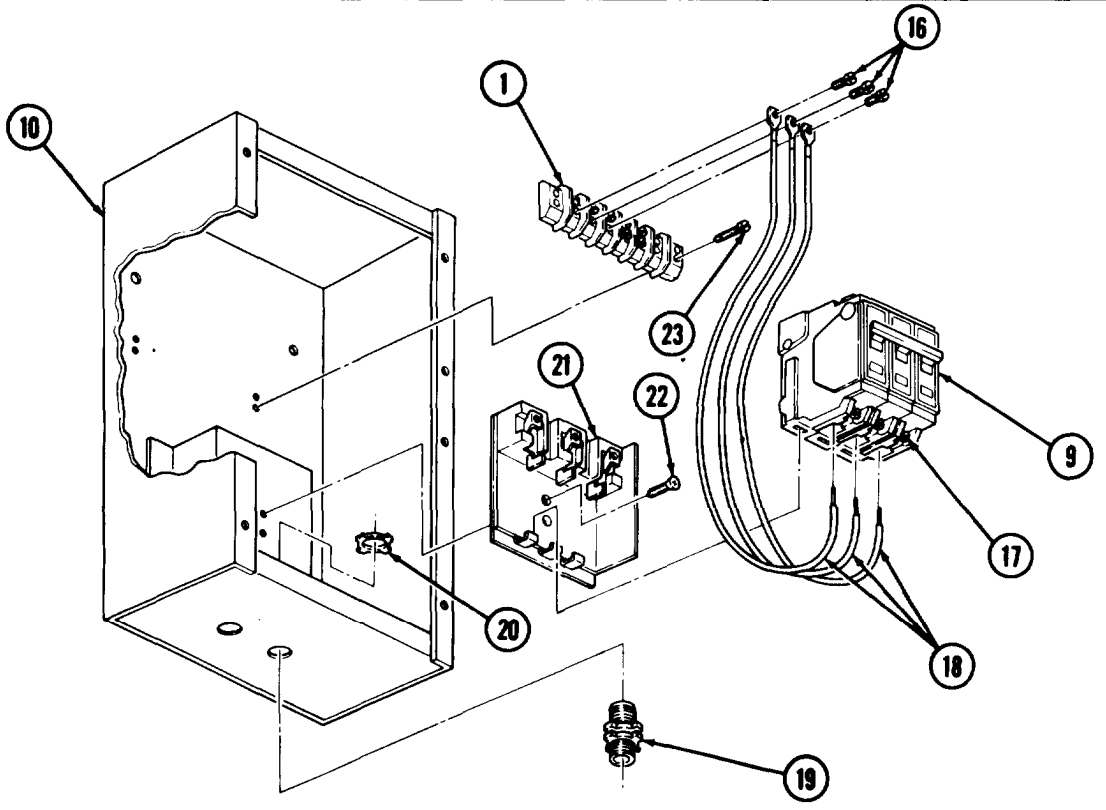

15-84. CONTROL CENTER BOX MAINTENANCE (Contd)

c. Assembly

1. Install two nipples (7) on control center box (1) with two nuts (8).
2. Install circuit breaker mounting base (9) in control center box (1) with two screws (10).
3. Install circuit breaker (4) on circuit breaker mounting base (9).
4. Install terminal board (2) in control center box (1) with four screws (11).
5. Install three wires (6) on circuit breaker (4) by tightening three screws (5).
6. Install three wires (6) on terminal board (2) with three screws (3).

d. Installation

1. Install control center box (1) on van body (14) with four new lockwashers (13) and screws (12).
2. Route wiring harnesses (16) and (15) through two nipples (7) in control center box (1).
3. Install three wires (23) on circuit breaker (4) with three screws (21).
4. Install three wires (17) on terminal board (2) with three screws (18).
5. Install covers (22) and (20) on control center box (1) with eight screws (19).

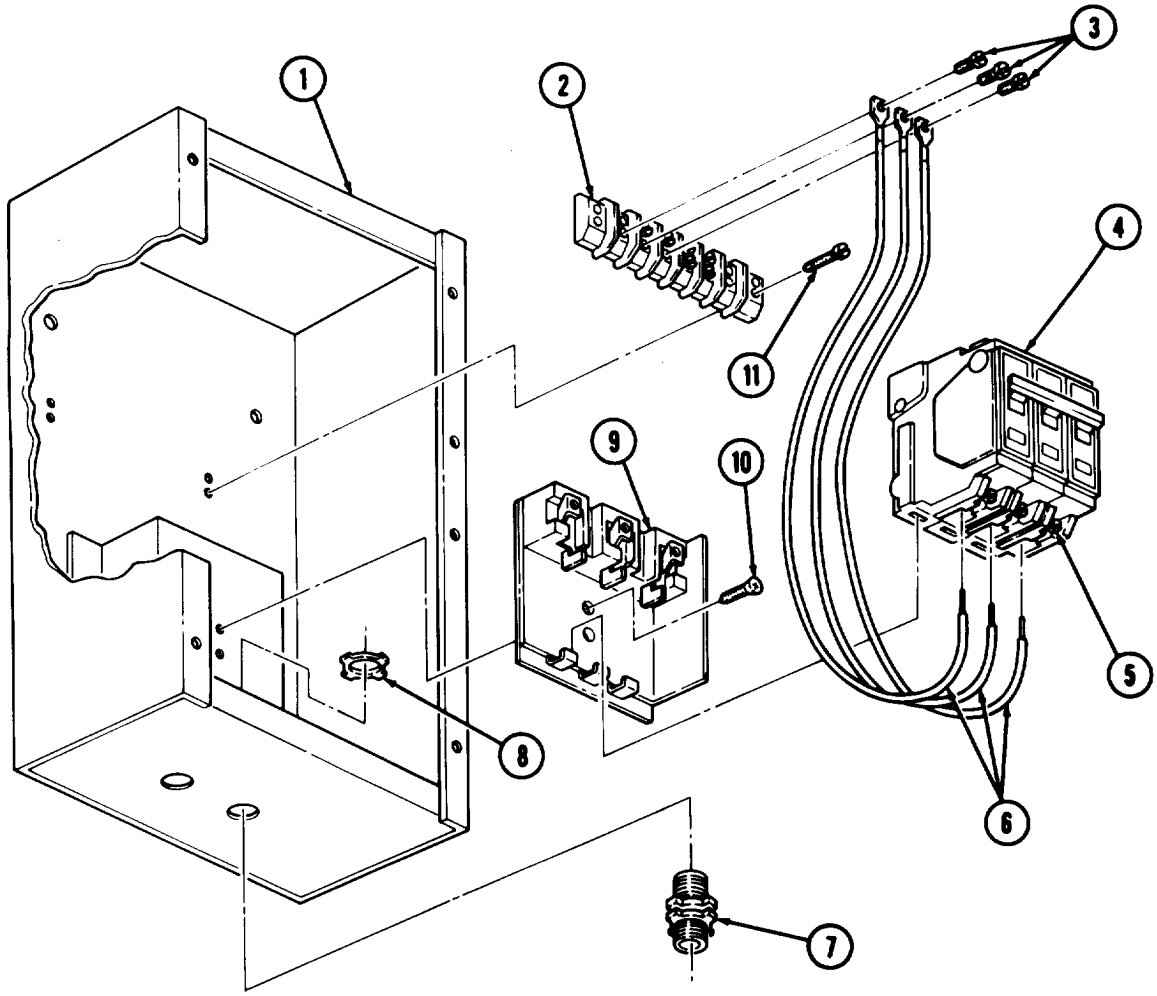

15-84. CONTROL CENTER BOX MAINTENANCE (Contd)

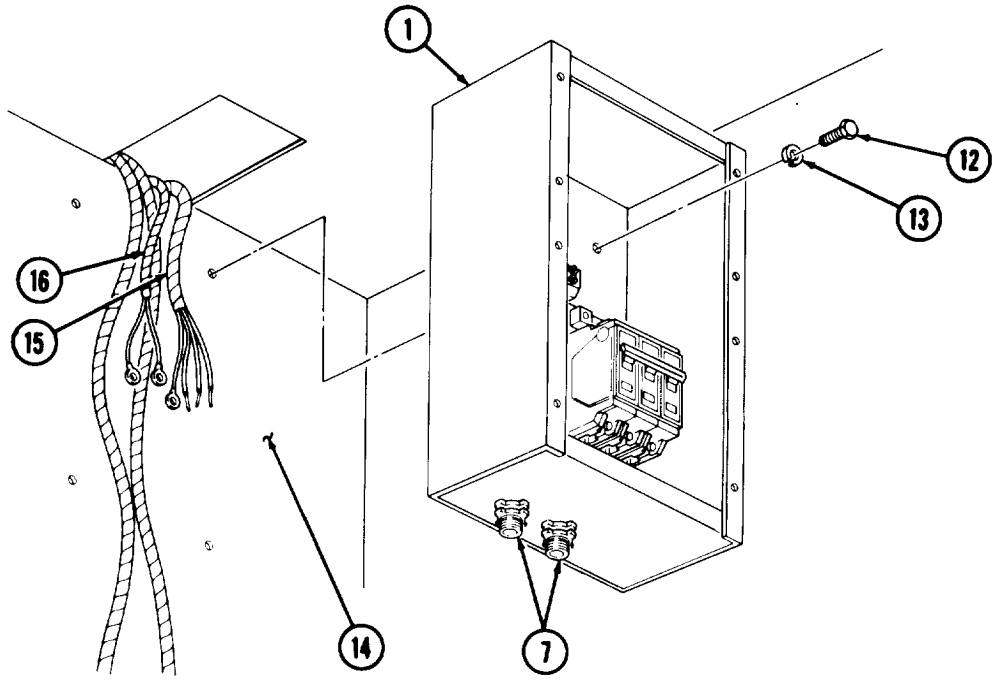

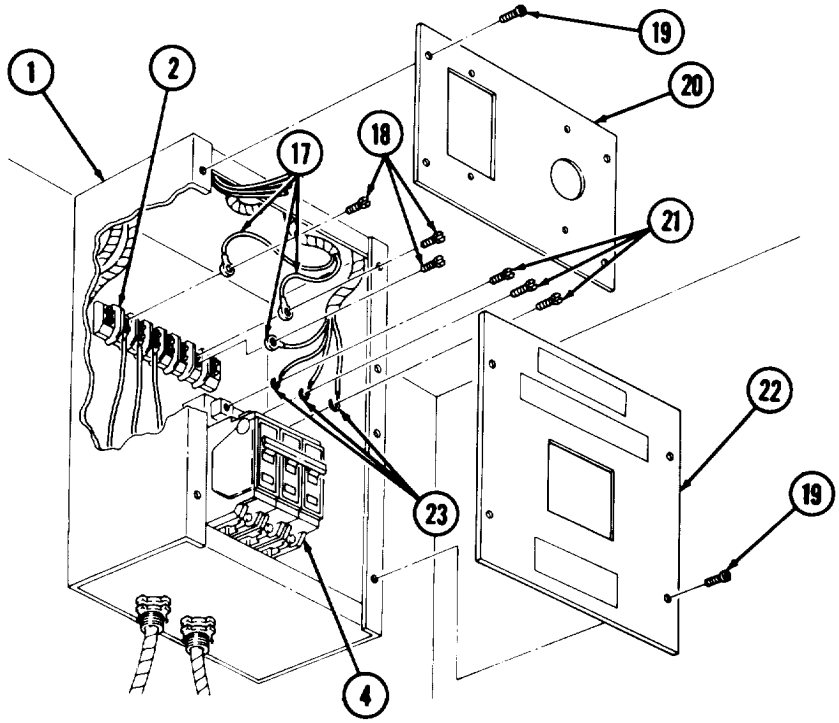

FOLLOW-ON TASKS:
- Install AC manual starter switches (para. 15-89).
- Install heater thermostat and 10 kW heater thermostat (TM 9-2320-260-20).
- Connect battery ground cable (TM 9-2320-260-20).
- Connect external power source (TM 9-2320-260-10).

15-85. 400 Hz CONVERTER AND SUPPORT BRACKET REPLACEMENT

THIS TASK COVERS:

a. Removal **b. Installation**

INITIAL SETUP

APPLICABLE MODELS
M820, M820A2

TEST EQUIPMENT
Multimeter (Appendix **B, Item 115)**

TOOLS
General mechanic's tool kit
(Appendix B, Item 1)
Tool kit, electrical (Appendix B, Item 106)

MATERIALS/PARTS
Four locknuts (Appendix D, Item 170)
Two locknuts (Appendix D, Item 189)
Four locknuts (Appendix D, Item 171)

REFERENCES (TM)
TM 9-2320-260-10
TM 9-2320-260-20
TM 9-2320-260-34P-2

EQUIPMENT CONDITION
- External power source disconnected (TM 9-2320-260-10).
- Battery ground cable disconnected (TM 9-2320-260-20).

a. Removal

NOTE
Tag wires, cables, and leads for installation.

1. Remove four screws (1), cover (2), and gasket (3) from converter (4).
2. Remove seven nuts (9) and wires (10) from converter (4).
3. Remove two lockwashers (8) and wiring harnesses (6) and (7) from converter (4).
4. Remove four locknuts (18), washers (19), screws (11), and converter (4) from support bracket (5). Discard locknuts (18).
5. Remove two locknuts (12), U-bolt (16), and two nuts (17) from support bracket (5). Discard locknuts (12).
6. Remove four locknuts (14), screws (15), and support bracket (5) from van body (13). Discard locknuts (14).

b. Installation

1. Install support bracket (5) on van body (13) with four screws (15) and new locknuts (14).
2. Install two nuts (17) and U-bolt (16) on support bracket (5) with two new locknuts (12).
3. Install converter (4) on support bracket (5) with four screws (11), washers (19), and new locknuts (18).
4. Route wiring harnesses (7) and (6) through converter (4) and install two lockwashers (8) over wiring harnesses (7) and (6).
5. Install seven wires (10) on converter (4) with seven nuts (9).
6. Install gasket (3) and cover (2) on converter (4) with four screws (1).

15-85. 400 Hz CONVERTER AND SUPPORT BRACKET REPLACEMENT (Contd)

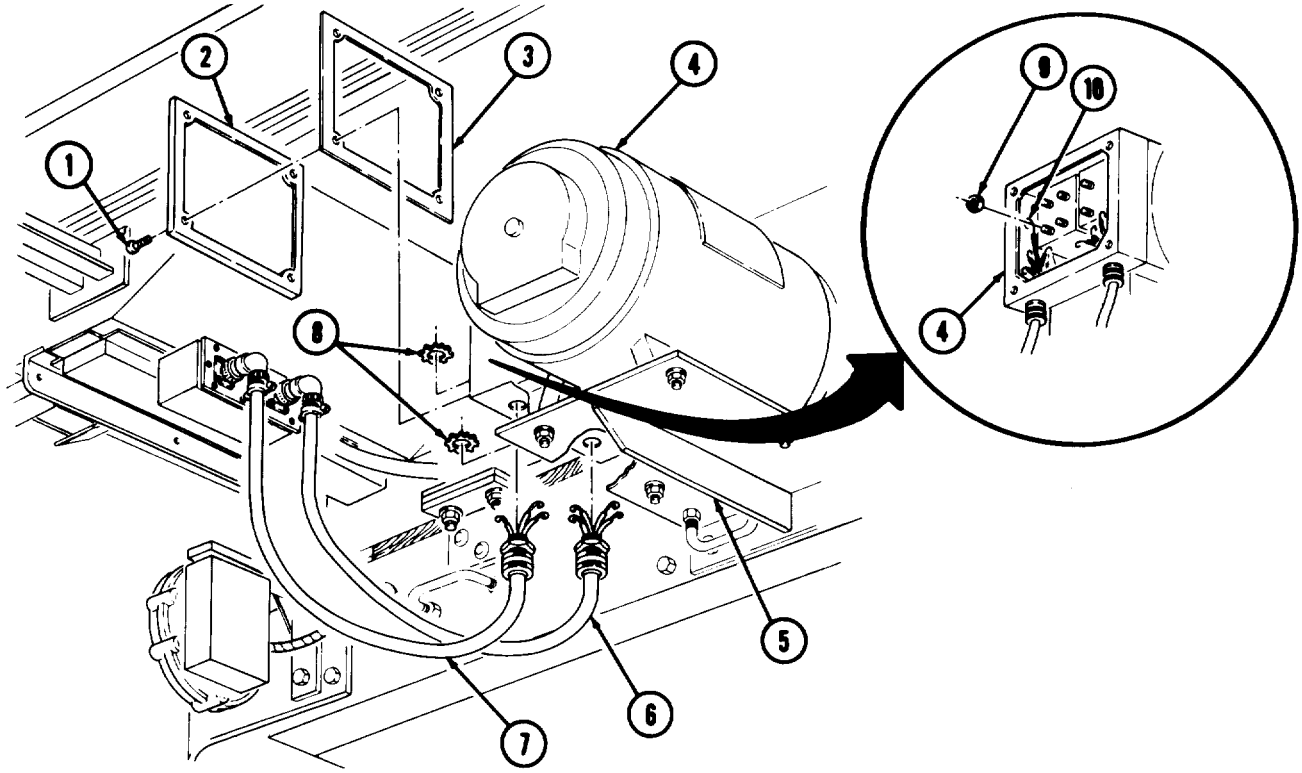

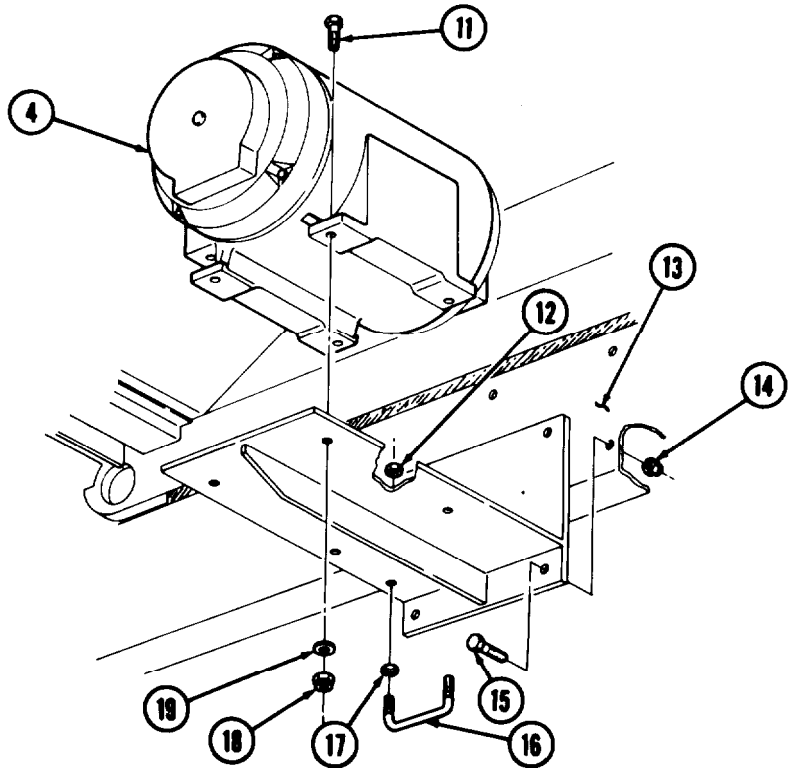

FOLLOW-ON TASKS:
- Connect battery ground cable (TM 9-2320-260-20).
- Connect external power source (TM 9-2320-260-10).

15-86. CONVERTER JUNCTION BOX REPLACEMENT

THIS TASK COVERS:

a. Removal b. Installation

INITIAL SETUP

APPLICABLE MODELS
M820, M820A2

TEST EQUIPMENT
Multimeter (Appendix B, Item 115)

TOOLS
General mechanic's tool kit (Appendix B, Item 1)
Tool kit, electrical (Appendix B, Item 106)
Soldering gun (Appendix B, Item 117)

MATERIALS/PARTS
Eight locknuts (Appendix D, Item 182)
Gasket (Appendix D, Item 76)
Safety wire (Appendix D, Item 372)

MATERIALS/PARTS (Contd)
Electrical tape (Appendix C, Item 51)
Solder (Appendix C, Item 47)
Sealing compound (Appendix C, Item 43)

REFERENCES (TM)
TM 9-2320-260-10
TM 9-2320-260-20
TM 9-2320-260-34P-2

EQUIPMENT CONDITION
- External power source disconnected (TM 9-2320-260-10).
- Battery ground cable disconnected (TM 9-2320-260-20).

a. Removal

NOTE

Tag wires, cables, and leads for installation.

1. Disconnect auxiliary pump wiring harness (1) from connector (2).
2. Remove four screws (3), cover (4), and gasket (5) from outlet box (7). Discard gasket (5).
3. Desolder three wires (6) from connector (1).
4. Disconnect wiring harnesses (15) and (16) from connectors (14) and (12).
5. Remove eight screws (17) and cover (11) from junction box (8).
6. Desolder three wires (9) and four wires (18) from connectors (12) and (14).
7. Remove eight locknuts (10), screws (13), and connectors (12) and (14) from cover (11). Discard locknuts (10).
8. Remove nut (27), nut (24), adapter (25), and coupling (26) from junction box (8).

NOTE

- Safety wire will be used to install new wiring harness. Do not cut safety wire from spool until wiring harness has been pulled through and proper length has been obtained.
- Safety wire must be attached to wires with electrical tape.

9. Pull wire (22) out of conduit (23).
10. Remove junction box (8) from conduits (20) and (23) and wires (19), (21), and (22).

15-86. CONVERTER JUNCTION BOX REPLACEMENT (Contd)

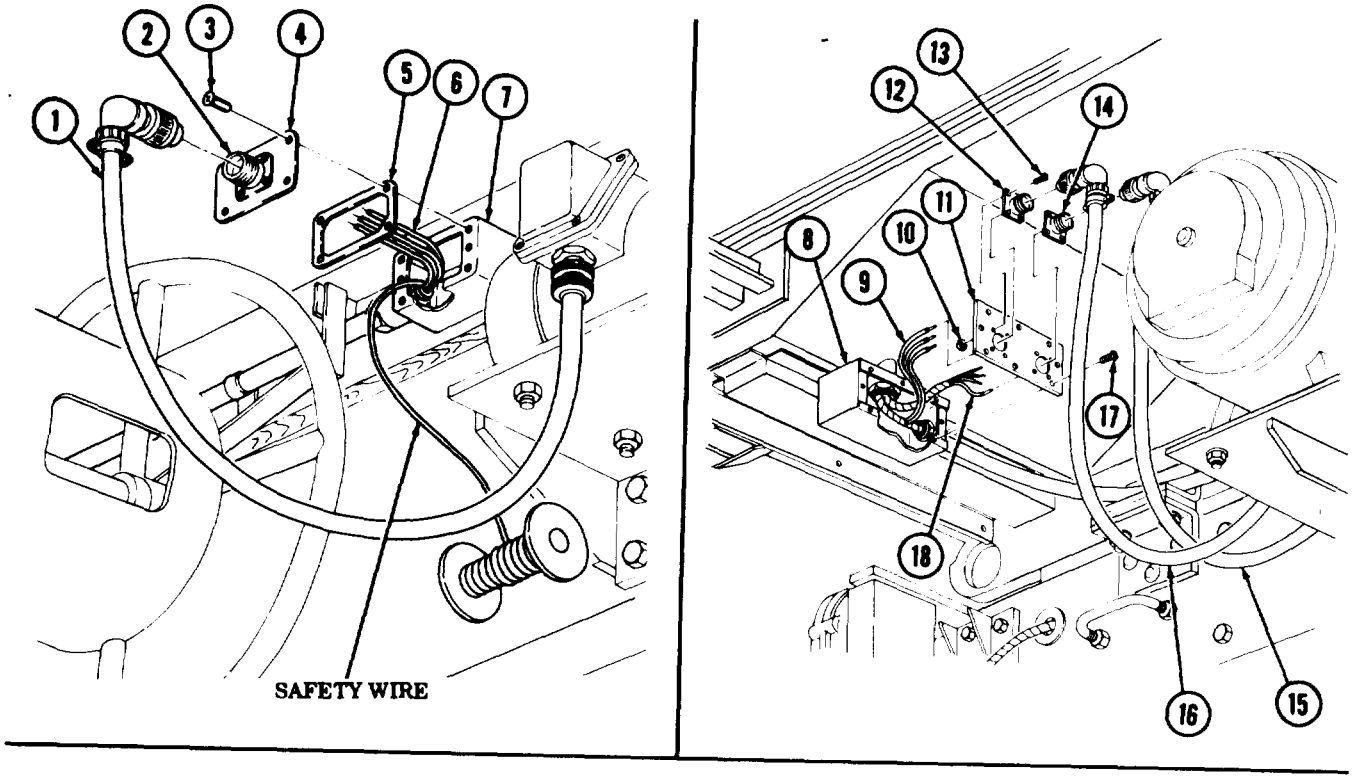

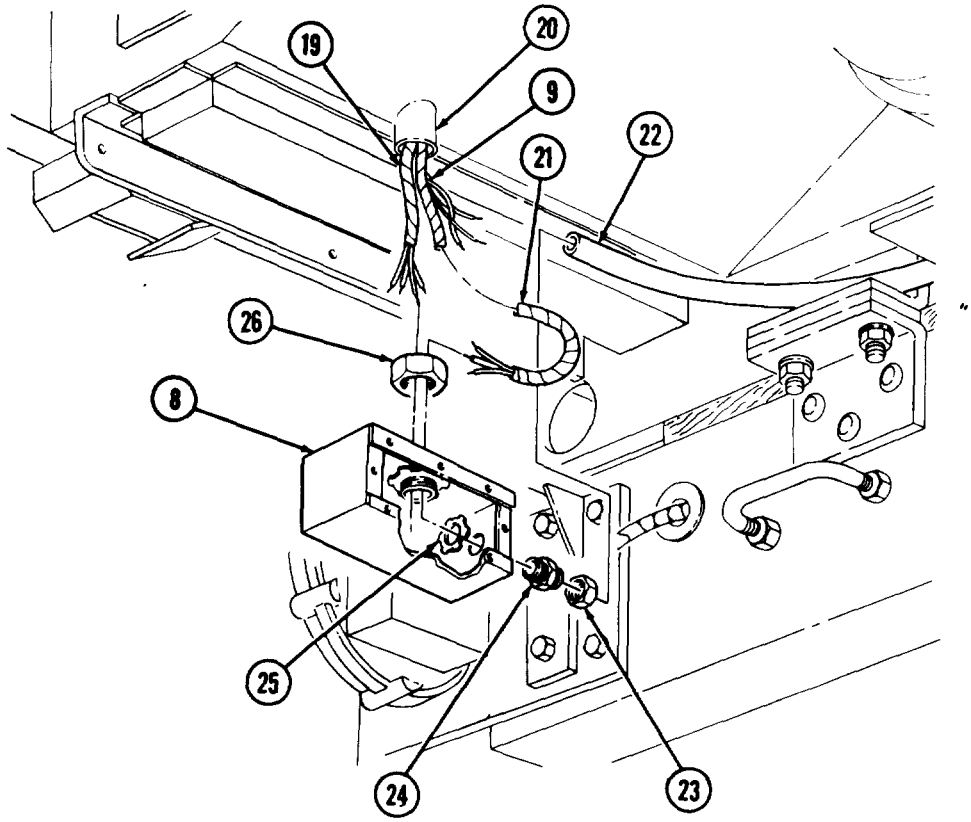

15-86. CONVERTER JUNCTION BOX REPLACEMENT (Contd)

b. Installation

1. Place nut (11) on conduit (2) and route harnesses (1) and (4), and wires (3) through holes in junction box (10).
2. Route harness (4) through conduit (5).
3. Position junction box (10) on conduits (2) and (5). Install adapter (8) on junction box (10) and conduit (5) with nut (7) and coupling (9).
4. Install nut (11) on junction box (10).
5. Install connectors (12) and (14) on cover (20) with eight screws (13) and new locknuts (19).
6. Solder four wires (18) and three wires (3) on connectors (14) and (12).

NOTE

Apply sealing compound to cover.

7. Install cover (20) on junction box (10) with eight screws (15).
8. Connect wiring harnesses (17) and (16) to connectors (12) and (14).
9. Position new gasket (24) and cover (23) on outlet box (25) and solder three wires (26) to connector (27). Remove safety wire from wires (26).
10. Install new gasket (24) and cover (23) on outlet box (25) with four screws (22).
11. Connect auxiliary pump wiring harness (21) to connector (27).

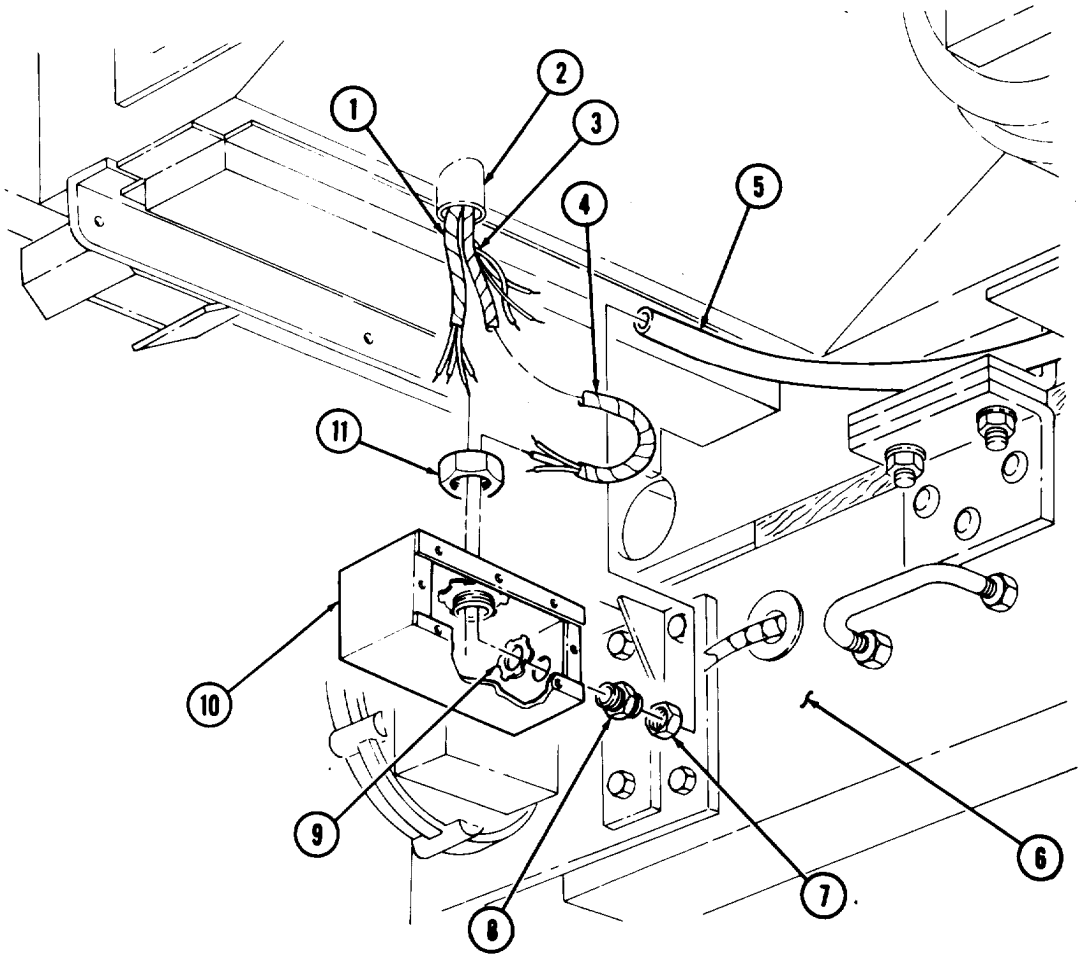

15-86. CONVERTER JUNCTION BOX REPLACEMENT (Contd)

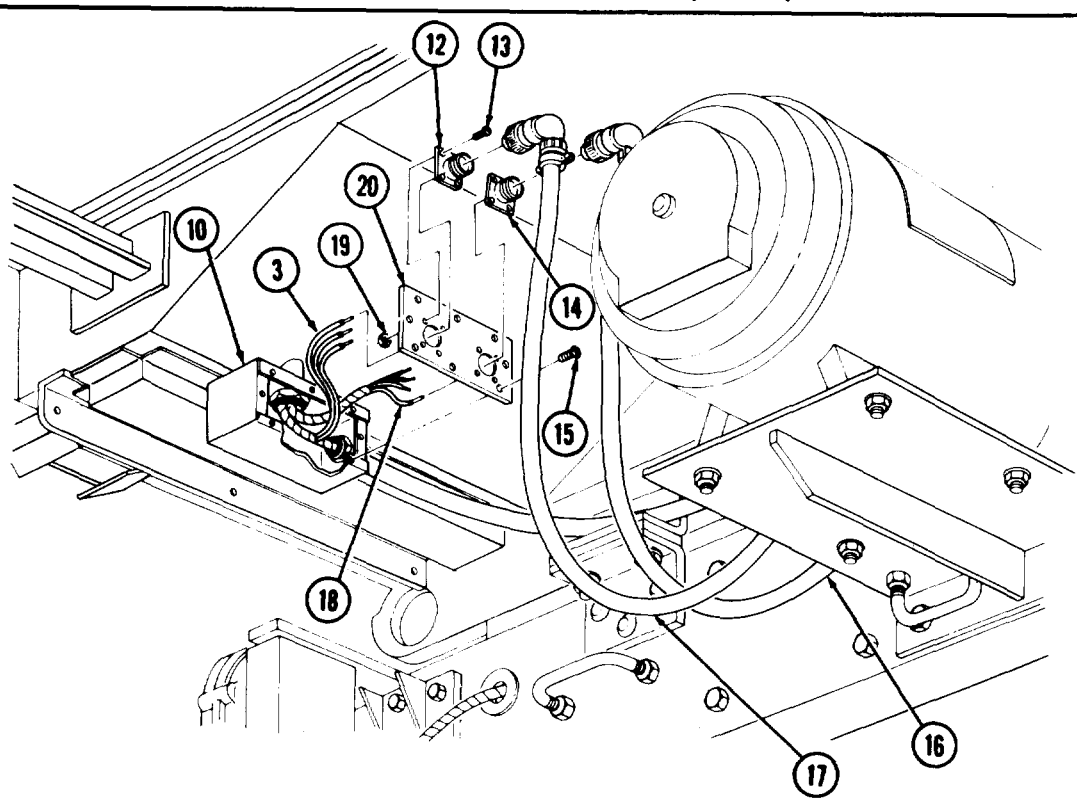

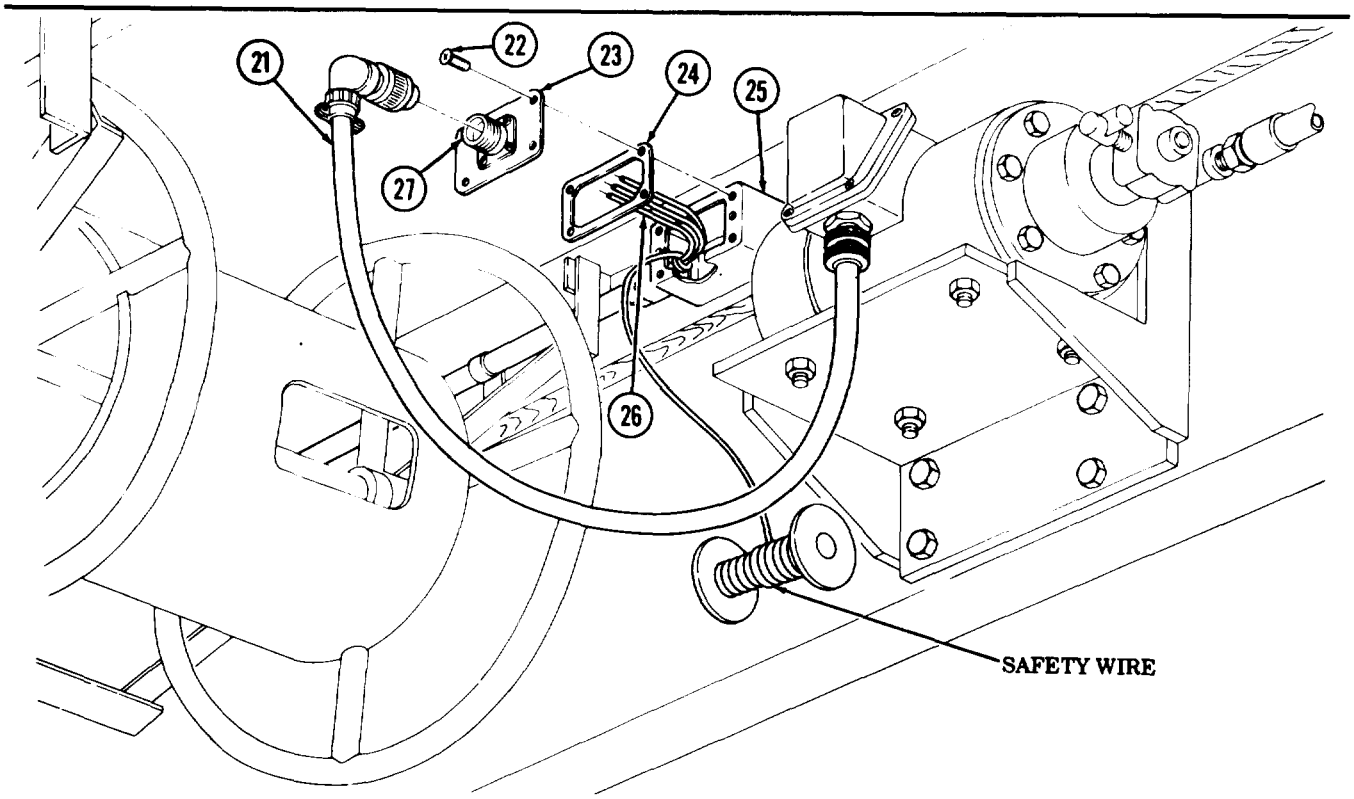

FOLLOW-ON TASKS: • Connect battery ground cable (TM 9-2320-260-20).
• Connect external power source (TM 9-2320-260-10).

15-87. 400 Hz CONVERTER HARNESS CONDUIT REPLACEMENT

THIS TASK COVERS:

a. Removal **b. Installation**

INITIAL SETUP

APPLICABLE MODELS
M820, M820A2

TEST EQUIPMENT
Multimeter (Appendix B, Item 115)

TOOLS
General mechanic's tool kit (Appendix B, Item 1)
Tool kit, electrical (Appendix B, Item 106)

REFERENCES (TM)
TM 9-2320-260-10
TM 9-2320-260-20
TM 9-2320-260-34P-2

EQUIPMENT CONDITION
- External power source disconnected (TM 9-2320-260-10).
- Battery ground cable disconnected (TM 9-2320-260-20).
- Outlet box removed (para. 15-88).
- Converter junction box removed (para. 15-86).

a. Removal

1. Remove six screws (2) and clamps (3) from conduits (7) and (4).
2. Remove nuts (8) and (5) from coupling (l).
3. Remove coupling (1) from conduits (7) and (4).
4. Remove conduits (7) and (4) from van body (6).

b. Installation

1. Position nuts (8) and (5) on conduits (7) and (4).
2. Install coupling (1) on conduits (7) and (4).
3. Install conduits (7) and (4) on van body (6) with six clamps (3) and screws (2).
4. Tighten nuts (8) and (5) on coupling (1).

15-87. 400 Hz CONVERTER HARNESS CONDUIT REPLACEMENT (Contd)

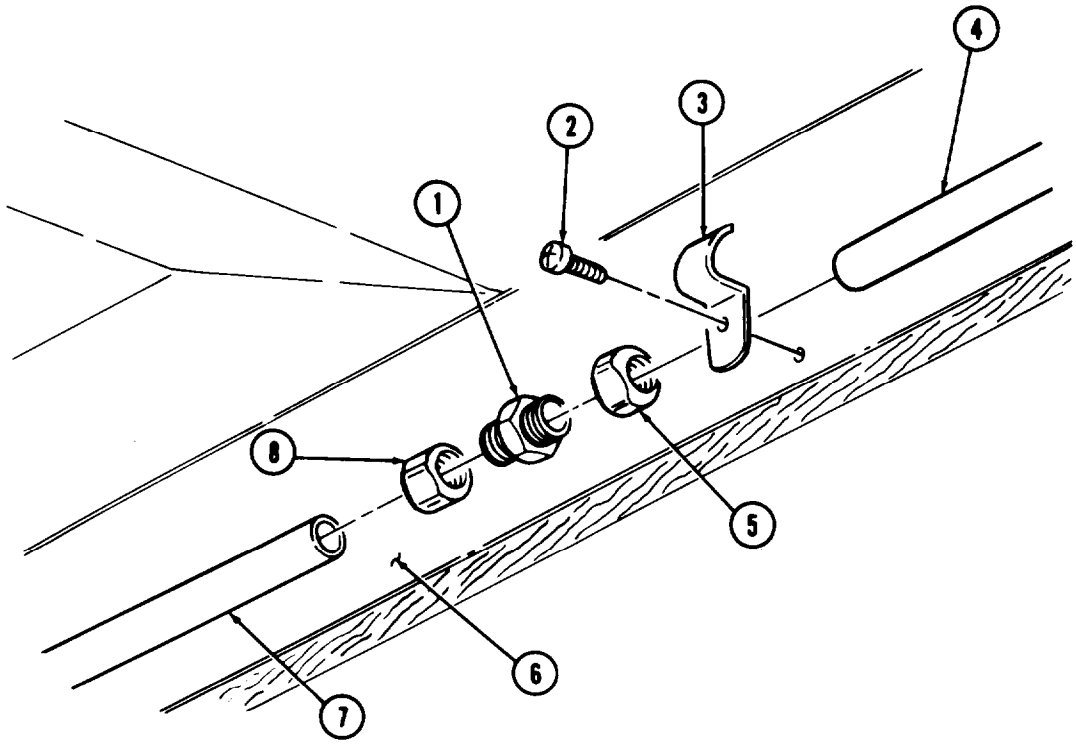

FOLLOW-ON TASKS:
- Install converter junction box (para. 15-86).
- Install outlet box (para. 15-88).
- Connect battery ground cable (TM 9-2320-260-20).
- Connect external power source (TM 9-2320-260-10).

15-88. OUTLET BOX REPLACEMENT

THIS TASK COVERS:

a. Removal **b. Installation**

INITIAL SETUP

APPLICABLE MODELS
M820, M820A2

TEST EQUIPMENT
Multimeter (Appendix B, Item 115)

TOOLS
General mechanic's tool kit (Appendix B, Item 1)
Tool kit, electrical (Appendix B, Item 106)
Soldering gun (Appendix B, Item 117)

MATERIALS/PARTS
Gasket (Appendix D, Item 76)
Four locknuts (Appendix D, Item 182)
Solder (Appendix C, Item 47)

REFERENCES (TM)
TM 9-2320-260-10
TM 9-2320-260-20
TM 9-2320-260-34P-2

EQUIPMENT CONDITION
- External power source disconnected (TM 9-2320-260-10).
- Battery ground cable disconnected (TM 9-2320-260-20).

a. Removal

NOTE

Tag wires, cables, and leads for installation.

1. Disconnect auxiliary pump wiring harness (1) from connector (2).
2. Remove four screws (3), cover (4), and gasket (5) from outlet box (6). Discard gasket (5).
3. Desolder three wires (8) from connector (2).
4. Remove four locknuts (12), screws (13), and connector (2) from cover (4). Discard locknuts (12).
5. Remove nut (11) from conduit (9) and outlet box (6).
6. Remove two screws (10) and outlet box (6) from van body (7).

b. Installation

1. Slide outlet box (6) onto end of conduit (9), secure outlet box (6) to conduit (9) with nut (11), and route wires (8) through hole in outlet box (6).
2. Install connector (2) on cover (4) with four screws (13) and new locknuts (12).
3. Position new gasket (5) and cover (4) on outlet box (6) and solder three wires (8) on connector (2).
4. Install new gasket (5) and cover (4) on outlet box (6) with four screws (3).
5. Install auxiliary pump wiring harness (1) on connector (2).

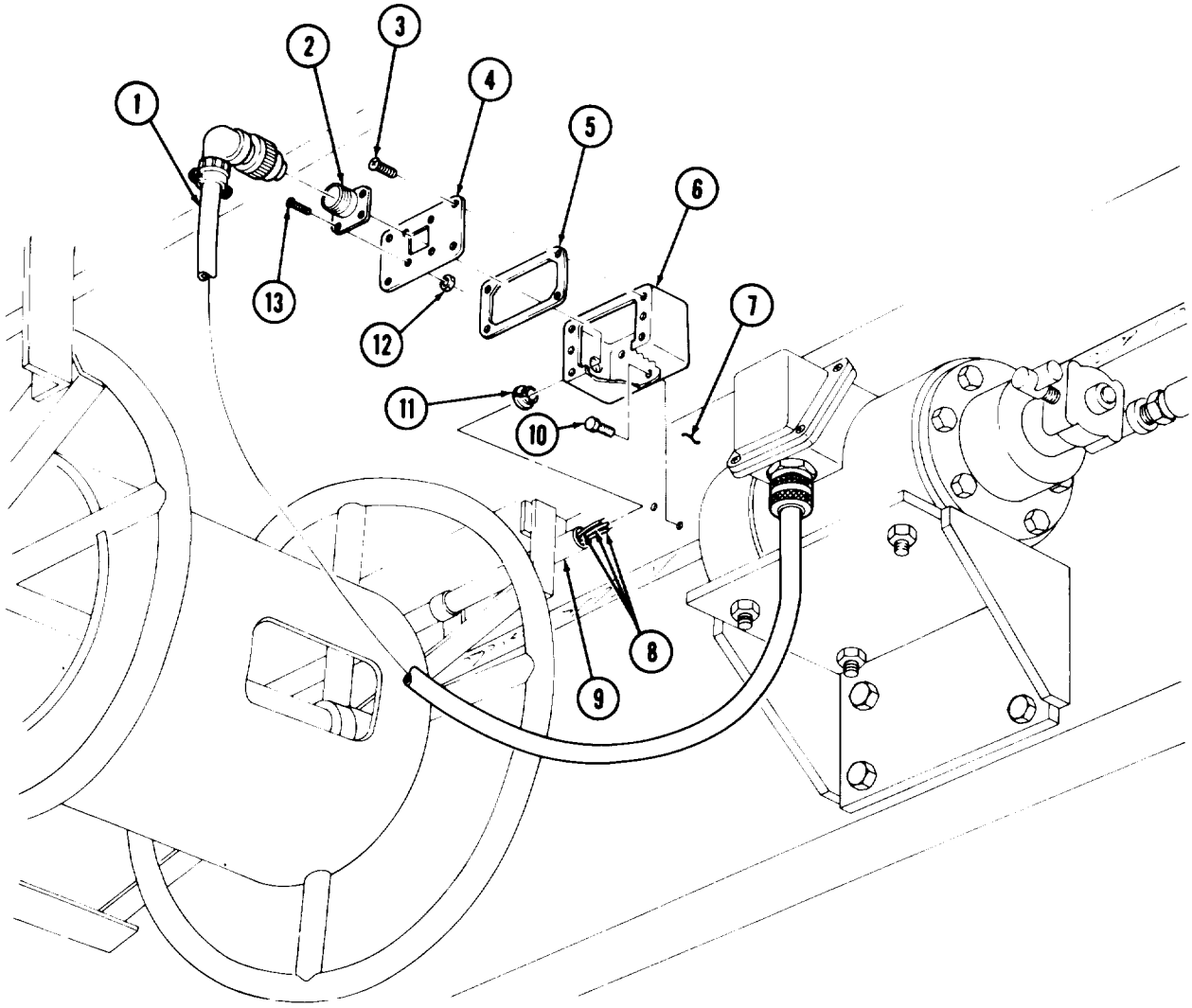

FOLLOW-ON TASKS: • Connect battery ground cable (TM 9-2320-260-20).
• Connect external power source (TM 9-2320-260-10).

15-89. AC MANUAL STARTER SWITCHES REPLACEMENT

THIS TASK COVERS:

a. Removal **b. Installation**

INITIAL SETUP

APPLICABLE MODELS
M820, M820A2

TEST EQUIPMENT
Multimeter (Appendix B, Item 115)

TOOLS
General mechanic's tool kit (Appendix B, Item 1)
Toolkit, electrical (Appendix B, Item 106)

MATERIALS/PARTS
Twelve insulated wire splices (Appendix C, Item 49)

REFERENCES (TM)
TM 9-2320-260-10
TM 9-2320-260-20
TM 9-2320-260-34P-2

EQUIPMENT CONDITION
- External power source disconnected (TM 9-2320-260-10).
- Battery ground cable disconnected (TM 9-2320-260-20).

a. Removal

NOTE

Tag wires, cables, and leads for installation.

1. Remove covers (5) and (6) from AC manual starter switches (9) and (8).
2. Disconnect six wires (2) and wires (1) from six insulated wire splices (4). Discard insulated wire splices (4).
3. Disconnect six wires (3) and wires (7) from six insulated wire splices (4). Discard insulated wire splices (4).
4. Remove two nuts (17) from two nipples (16).

CAUTION

Use care when removing AC manual starter switches. Excessive snagging or pulling on wiring harnesses may result in damage to wiring harnesses.

5. Remove four screws (18) and AC manual starter switch (8) from van body (19).
6. Remove two nuts (15) and nipples (16) from AC manual starter switch (9).
7. Remove two nuts (14) from two nipples (12).
8. Remove four screws (13) and AC manual starter switch (9) from van body (19).

b. Installation

1. Position AC manual starter switch (9) on two nipples (12) and install on van body (19) with four screws (13). Ensure wiring harnesses (10) and (11) are routed through AC manual starter switch (9).
2. Install two nuts (14) on two nipples (12).
3. Install two nipples (16) on AC manual starter switch (9) with two nuts (15).
4. Position AC manual starter switch (8) on two nipples (16) and install on van body (19) with four screws (18). Ensure wiring harnesses (10) and (11) are routed through two nipples (16).
5. Install two nuts (17) on two nipples (16).
6. Connect six wires (2) and wires (1) to six new insulated wire splices (4).
7. Connect six wires (3) and wires (7) to six new insulated wire splices (4).
8. Install covers (5) and (6) on AC manual starter switches (9) and (8).

15-89. AC MANUAL STARTER SWITCHES REPLACEMENT (Contd)

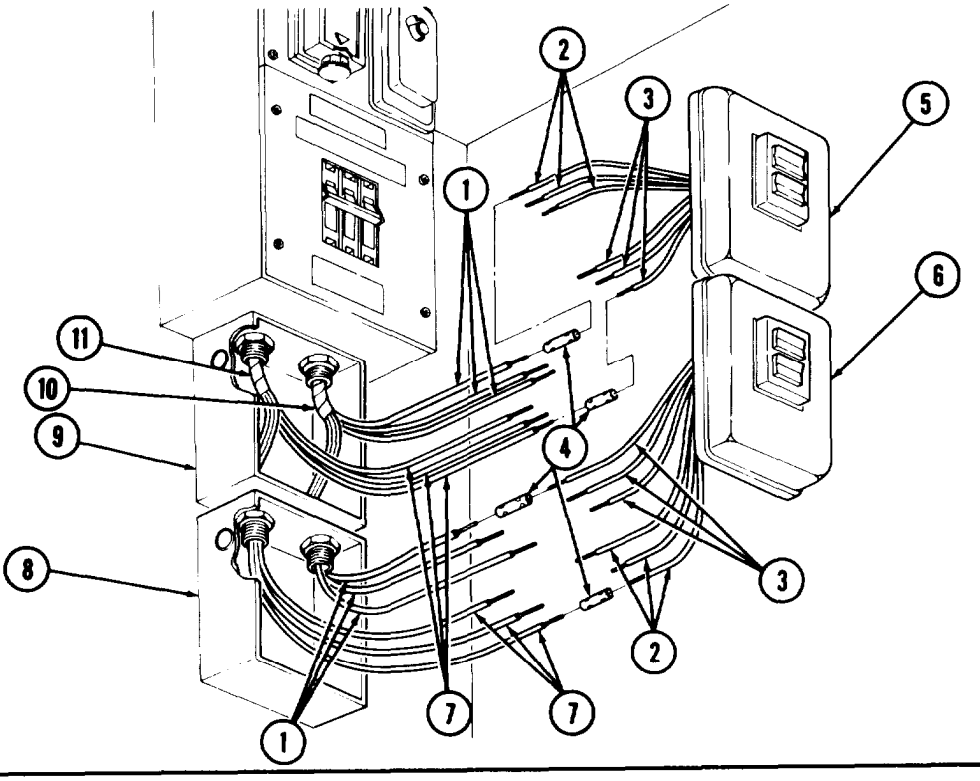

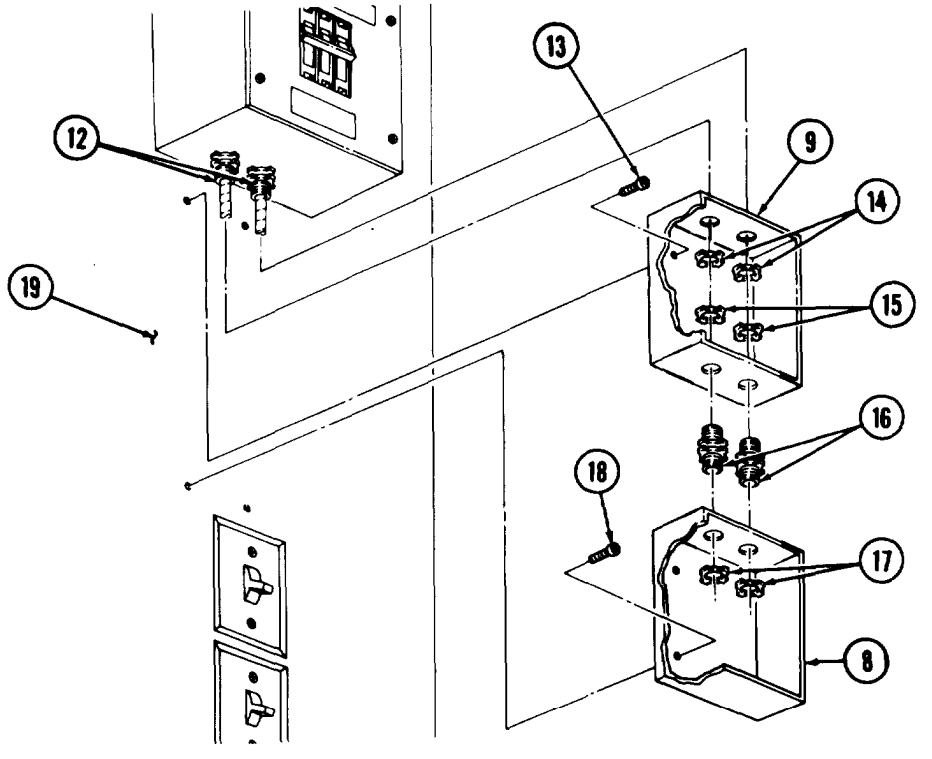

FOLLOW-ON TASKS: • Connect battery ground cable (TM 9-2320-260-20).
• Connect external power source (TM 9-2320-260-10).

15-90. ELECTRICAL BOX REPLACEMENT

THIS TASK COVERS:

a. Removal **b. Installation**

INITIAL SETUP

APPLICABLE MODELS
M820, M820A1, M820A2

TOOLS
General mechanic's tool kit
(Appendix B, Item 1)

REFERENCES (TM)
TM 9-2320-260-10
TM 9-2320-260-20
TM 9-2320-260-34P-2

EQUIPMENT CONDITION
- Battery ground cable disconnected (TM 9-2320-260-20).
- Entrance receptacle removed (para. 15-81).

a. Removal

1. Remove six screws (1) and bracket (2) from electrical box (7) and load center (3).
2. Remove electrical box (7) from end panel (4).
3. Remove grommet (8) from electrical box (7).
4. Remove screw (5) and plate (6) from electrical box (7).

b. Installation

1. Install plate (6) on electrical box (7) with screw (5).
2. Install grommet (8) on electrical box (7).
3. Position electrical box (7) on end panel (4) and install bracket (2) on electrical box (7) and load center (3) with six screws (1).

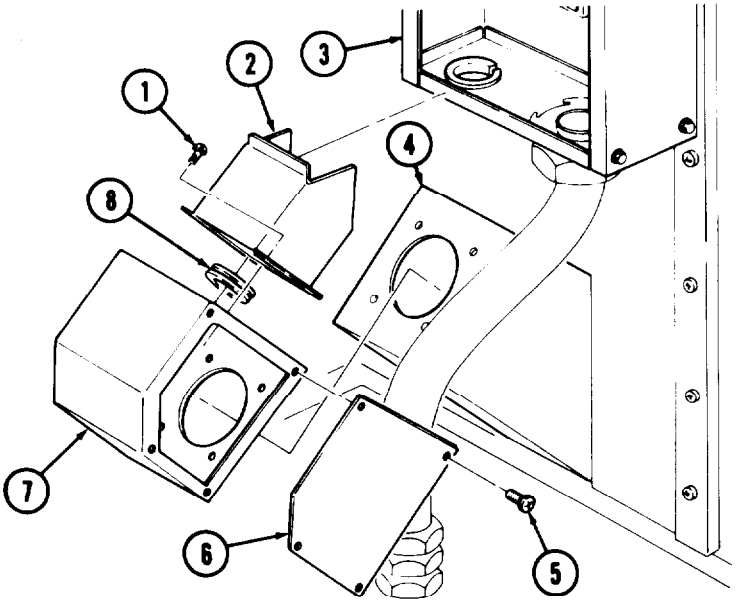

FOLLOW-ON TASKS:
- Install entrance receptacle (para. 15-81).
- Connect battery ground cable (TM 9-2320-260-20).

15-91. BLACKOUT AND EMERGENCY LIGHT FIXTURES RELACEMENT

THIS TASK COVERS:

a. Removal **b. Installation**

INITIAL SETUP

APPLICABLE MODELS
M820, M820A2

TEST EQUIPMENT
Multimeter (Appendix B, Item 115)

TOOLS
General mechanic's tool kit (Appendix B, Item 1)
Tool kit, electrical (Appendix B, Item 106)

REFERENCES (TM)
TM 9-2320-260-10
TM 9-2320-260-20
TM 9-2320-260-34P-2

EQUIPMENT CONDITION
- External power source disconnected (TM 9-2320-260-10).
- Battery ground cable disconnected (TM 9-2320-260-20).
- Emergency and blackout lamps removed (TM 9-2320-260-20).

a. Removal

NOTE
Tag wires; cables, and leads for installation.

1. Remove four screws (7) and housing (6) from van ceiling (3).
2. Remove four screws (1), two jumper cables (5), and wiring harness leads (2) and (4) from housing (6).

b. Installation

1. Install two jumper cables (5) and wiring harness leads (2) and (4) on housing (6) with four screws (1).
2. Install housing (6) on van ceiling (3) with four screws (7).

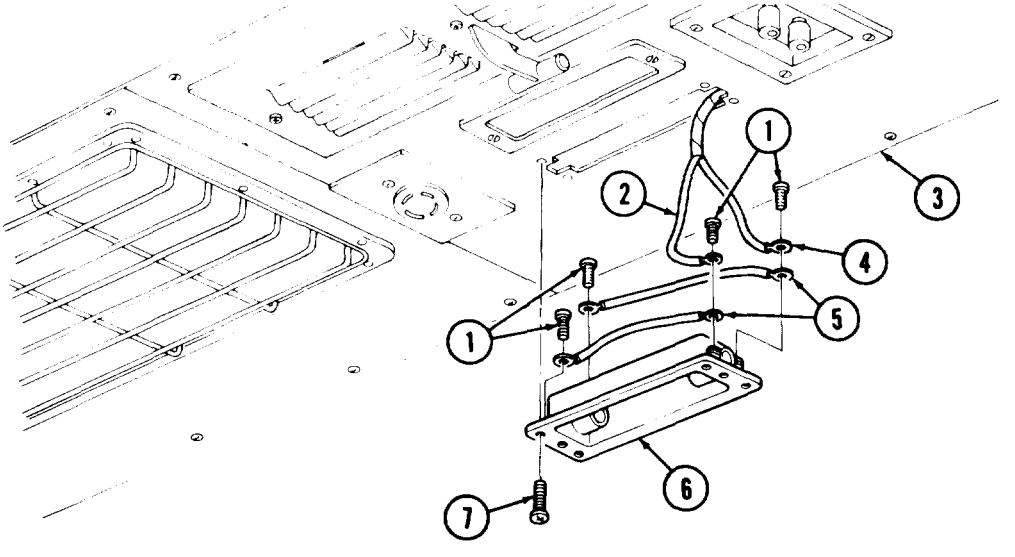

FOLLOW-ON TASKS:
- Install emergency and blackout lamps (TM 9-2320-260-20).
- Connect battery ground cable (TM 9-2320-260-20).
- Connect external power source (TM 9-2320-260-10).

15-92. FLUORESCENT LIGHT FIXTURES MAINTENANCE

THIS TASK COVERS:

a. Removal
b. Disassembly
c. Assembly
d. Installation

INITIAL SETUP

APPLICABLE MODELS
M820, M820A2

TEST EQUIPMENT
Multimeter (Appendix B, Item 115)

TOOLS
General mechanic's tool kit (Appendix B, Item 1)
Tool kit, electrical (Appendix B, Item 106)

MATERIALS/PARTS
Lockwasher (Appendix D, Item 251)
Two insulated wire splices (Appendix C, Item 49)

PREFERENCES (TM)
TM 9-2320-260-10
TM 9-2320-260-20
TM 9-2320-260-34P-2

EQUIPMENT CONDITION
- External power source disconnected (TM 9-2320-260-10).
- Battery ground cable disconnected (TM 9-2320-260-20).
- Fluorescent light removed (TM 9-2320-260-20).

a. Removal

CAUTION

Use care when maintaining fluorescent light fixtures. Excessive snagging or pulling on wiring harnesses may damage wiring harness.

NOTE

Tag wires, cables, and leads for installation.

1. Remove twenty screws (7) and light fixture (8) from van ceiling (9).
2. Remove screw (10), nut (6), lockwasher (5), and ground wire (4) from light fixture (8). Discard lockwasher (5).
3. Disconnect two wires (3) and wires (1) from two insulated wire splices (2). Discard insulated wire splices (2).

b. Disassembly

1. Remove four screws (19), fixture (18), and two wires (3) from light fixture (8).
2. Remove six screws (17), nuts (14), and sockets (15) from fixture (18).

NOTE

Tag wires, cables, and leads for installation.

3. Remove twelve screws (13) and wires (12) from six sockets (15).
4. Remove six starters (16) from six sockets (15).
5. Remove grommet (11) from light fixture (8).

15-92. FLUORESCENT LIGHT FIXTURES MAINTENANCE (Contd)

c. Assembly

1. Install grommet (11) in light fixture (8).
2. Install six starters (16) in six sockets (15).
3. Install six sockets (15) in fixture (18) with six screws (17) and nuts (14).
4. Install twelve wires (12) in six sockets (15) with twelve screws (13).
5. Route two wires (3) through grommet (11) in light fixture (8) and install fixture (18) on light fixture (8) with four screws (19).

d. Installation

1. Connect two wires (3) to two wires (1) with two new insulated wire splices (2).
2. Install ground wire (4) on light fixture (8) with screw (10), new lockwasher (5), and nut (6).
3. Install light fixture (8) in van ceiling (9) with twenty screws (7).

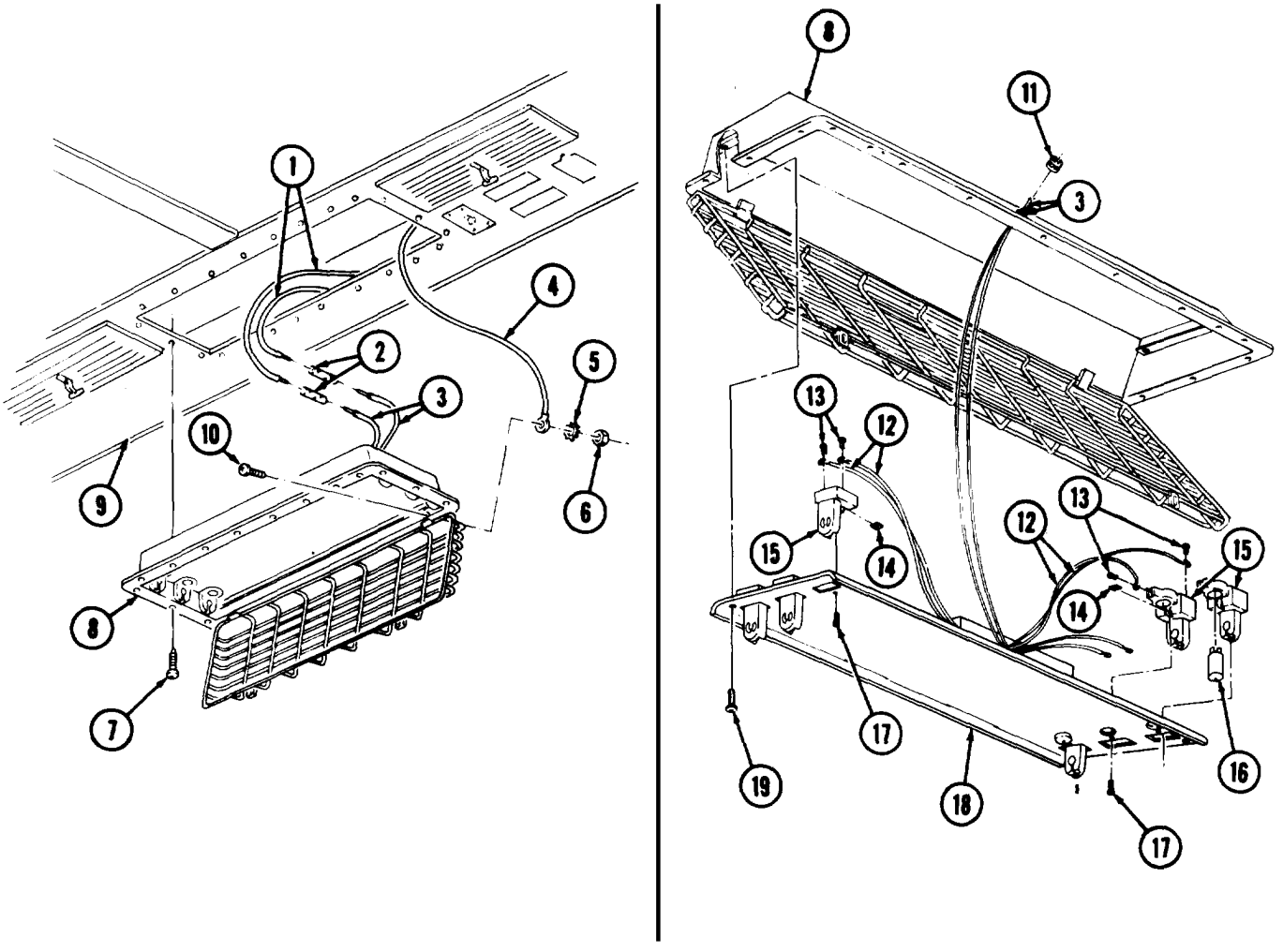

FOLLOW-ON TASKS:
- Install fluorescent light (TM 9-2320-260-20).
- Connect battery ground cable (TM 9-2320-260-20).
- Connect external power source (TM 9-2320-260-10).

15-93. CEILING LIGHT FIXTURES REPLACEMENT (M820A1)

THIS TASK COVERS:

a. Removal

b. Installation

INITIAL SETUP

APPLICABLE MODELS
M820A1

TOOLS
General mechanic's tool kit (Appendix B, Item 1)

MATERIALS/PARTS
Two insulated wire splices (Appendix C, Item 49)

REFERENCES (TM)
TM 9-2320-260-10
TM 9-2320-260-20
TM 9-2320-260-34P-2

EQUIPMENT CONDITION
- External power source disconnected (TM 9-2320-260-10).
- Battery ground cable disconnected (TM 9-2320-260-20).
- Ceiling light removed (TM 9-2320-260-20).

NOTE

All ceiling light fixtures are replaced the same. This procedure covers one ceiling light fixture.

a. Removal

1. Remove four screws (3) and center light fixture (2) from ceiling (1).

NOTE

Tag wires, cables, and leads for installation.

2. Disconnect two wires (4) and wires (6) from two insulated wire splices (5). Discard insulated wire splices (5).

b. Installation

1. Connect two wires (4) to two wires (6) with two new insulated wires splices (5).
2. Install center ceiling light fixture (2) in ceiling (1) with four screws (3).

15-93. CEILING LIGHT FIXTURES REPLACEMENT (M820A1) (Contd)

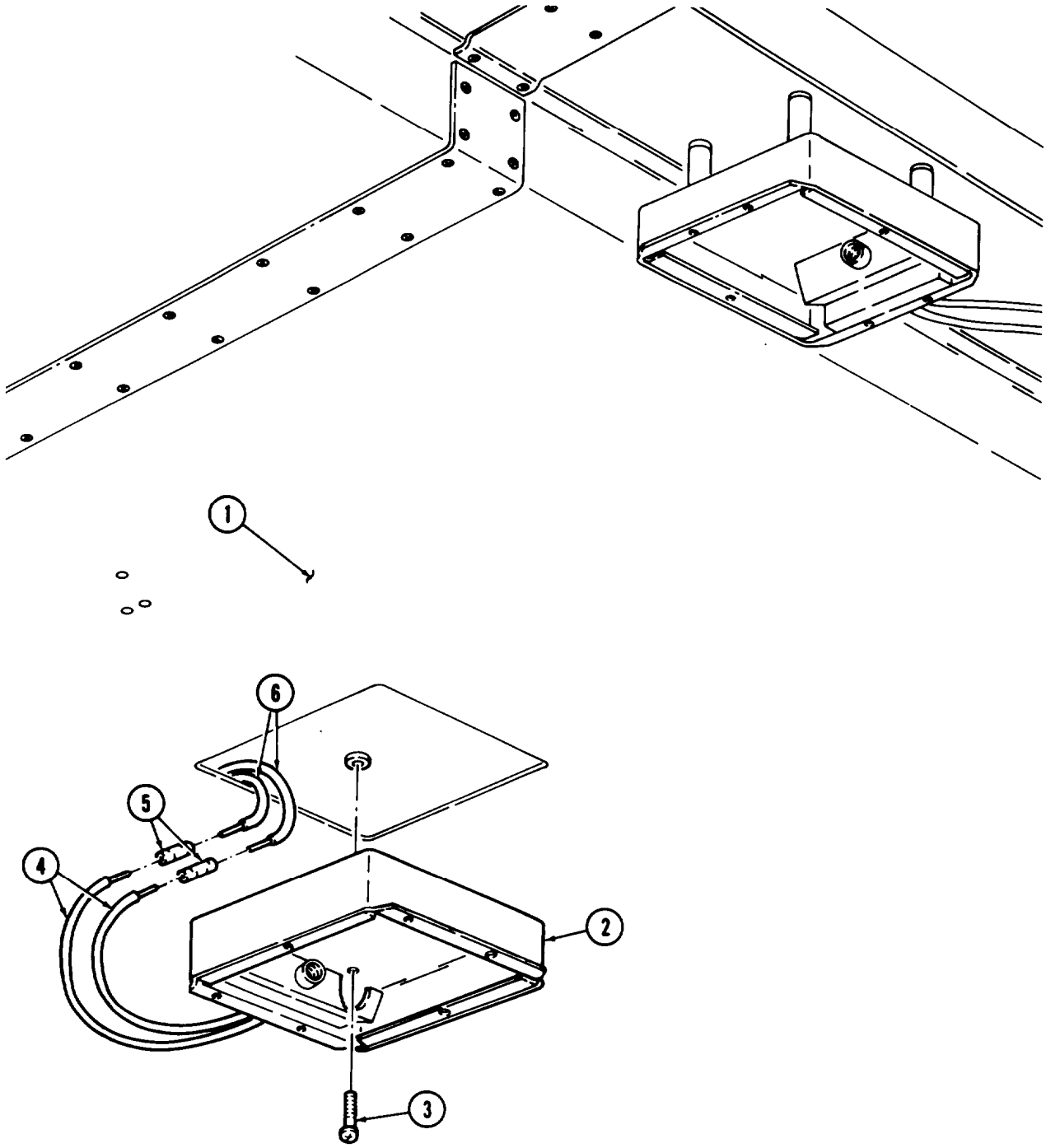

FOLLOW-ON TASKS:
- Install ceiling light (TM 9-2320-260-20).
- Connect battery ground cable (TM 9-2320-260-20).
- Connect external power source (TM 9-2320-260-10).

CHAPTER 16

WINCH AND POWER TAKEOFF MAINTENANCE

Section I. Front Winch Maintenance (page 16-1)
Section IL Rear Winch Maintenance (page 16-44)
Section III. Crane and Hoist Maintenance (page 16-76)
Section IV. Transmission Power Takeoff Maintenance (page 16-226)
Section V. Transfer Power Takeoff Maintenance (page 16-246)
Section VI. Power Divider and Drive Assembly Maintenance (page 16-266)

Section 1. FRONT WINCH MAINTENANCE

16-1. FRONT WINCH MAINTENANCE INDEX

PARA. NO.	TITLE	PAGE NO.
16-2.	Front Winch Repair	16-1
16-3.	Front Winch Level Wind Maintenance	16-18
16-4.	Front Winch Cable Tensioner Maintenance	16-28
16-5.	Front Winch Roller Maintenance	16-34
16-6.	Front Winch Drag Brake Replacement	16-41

16-2. FRONT WINCH REPAIR

THIS TASK COVERS:

a. Winch Disassembly
b. End Frame Disassembly
c. Gearcase Disassembly
d. Cleaning, Inspection, and Repair
e. Gearcase Assembly
f. End Frame Assembly
g. Winch Assembly

16-2. FRONT WINCH REPAIR (Contd)

INITIAL SETUP

APPLICABLE MODELS
All

TOOLS
General mechanic's tool kit (Appendix B, Item 1)
Mechancal puller kit (Appendix B, Item 14)
Spring tester (Appendix B, Item 10)
Torque wrench, 1/2-in. dr. (Appendix B, Item 3)
Outside micrometer (Appendix B, Item 8)
Inside micrometer (Appendix B, Item 9)
Dial indicator (Appendix B, Item 11)
Arbor press (Appendix B, Item 7)
Soft-head hammer (Appendix B, Item 47)

MATERIALS/PARTS
Nine lockwashers (Appendix D, Item 223)
Two seals (Appendix D, Item 427)
Seal (Appendix D, Item 429)
Seal (Appendix D, Item 423)
Seal (Appendix D, Item 425)
Two gaskets (Appendix D, Item 137)
Gasket (Appendix D, Item 96)
Gasket (Appendix D, Item 97)
TWO woodruff keys (Appendix D, Item 545)
Two woodruff keys (Appendix D, Item 556)
Two woodruff keys (Appendix D, Item 555)

MATERIALS/PARTS (Contd)
Woodruff key (Appendix D, Item 554)
Six screw-assembled lockwashers (Appendix D, Item 383)
Expansion plug (Appendix D, Item 330)
Plug (Appendix D, Item 327)
Four lockwashers (Appendix D, Item 219)
Six lockwashers (Appendix D, Item 218)
Gear oil (Appendix C, Item 22)
Sealing compound (Appendix C, Item 45)
GAA grease (Appendix C, Item 14)

REFERENCES (TM)
LO 9-2320-260-12
TM 9-214
TM 9-2320-260-20
TM 9-2320-260-34P-2

EQUIPMENT CONDITION
- Winch gear oil drained (LO 9-2320-260-12).
- Winch removed (TM 9-2320-260-20).
- Winch level wind removed (if equipped) (para. 16-3).
- Winch roller removed (para. 16-5).

GENERAL SAFETY INSTRUCTIONS
Stabilize winch while sitting vertical.

a Winch Disassembly

NOTE

Perform steps 1 and 2 if front winch is not equipped with level wind mechanism.

1. Remove four screws (2), lockwashers (3), and top channel (1) from gearcase (4) and end frame (8). Discard lockwashers (3).
2. Remove four screws (6), lockwashers (5), and side channel (7) from gearcase (4) and end frame (8). Discard lockwashers (5).
3. Remove nut (10) from tie rod (9).

NOTE

Assistant will help with step 4.

4. Turn gearcase (4) to the ground so drum (14) is vertical.

WARNING

Stabilize winch while sitting vertical. Failure to do so may result in injury to personnel.

5. Remove end frame (8) from drum shaft (15).
6. Remove setscrew (11), drag brake (13), and spring (12) from end frame (8).
7. Remove clutch (16), thrust ring (17), and sleeve (18) from end frame (8).

16-2. FRONT WINCH REPAIR (Contd)

NOTE

Mark position of adjusting nuts on tie rod for installation.

8. Remove tie rod (9) from gearcase (4).
9. Remove two woodruff keys (20) from drum shaft (15). Discard woodruff keys (20).
10. Remove thrust washer (19), drum (14), and seal (21) from shaft (15). Discard seal (21).

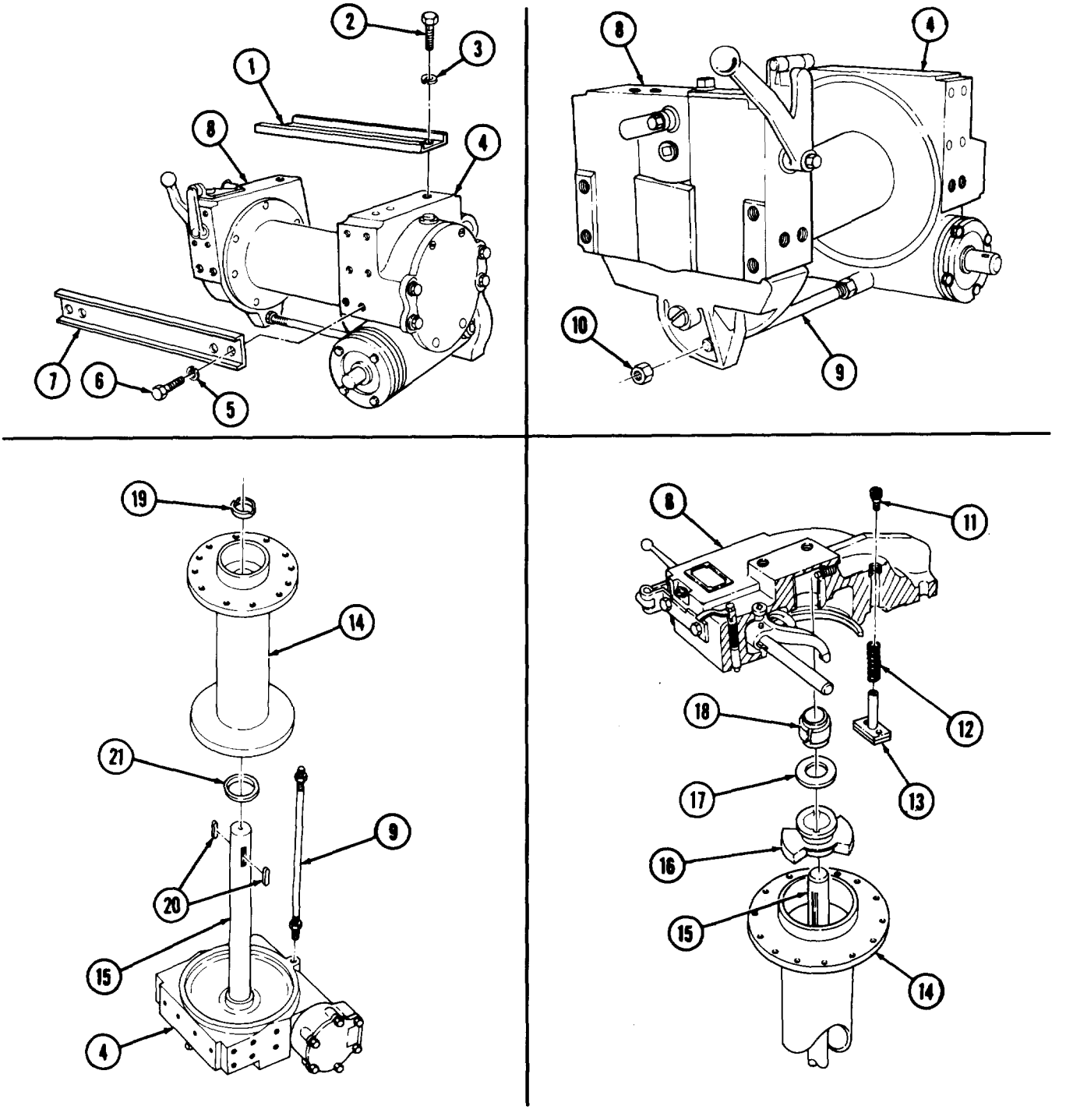

16-2. FRONT WINCH REPAIR (Contd)

b. End Frame Disassembly

1. Remove jamnut (26), nut (25), latch (24), bolt (23), spacer (22), spring (21), and shoulder pin (20) from end frame (2).
2. Remove pipe plug (7) from end frame (2).
3. Remove two screws (4), lockwashers (5), washers (6), and lock (3) from end frame (2). Discard lockwashers (5).
4. Remove seal (10) from end frame (2). Discard seal (10).
5. Remove pipe plug (19) from end frame (2).
6. Remove setscrew (18) from shift fork (8).
7. Remove setscrew (15), bail (12), and spring (13) from shifter handle (14).
8. Remove shifter handle (14) and woodruff key (11) from shifter shaft (16). Discard woodruff key (11).
9. Remove expansion plug (1) from end frame (2). Discard expansion plug (1).
10. Using brass drift, drive shifter shaft (16) from shift fork (8) until woodruff key (9) clears shift fork (8).
11. Remove woodruff key (9) from shifter shaft (16). Discard woodruff key (9).
12. Using brass drift, remove shifter shaft (16) from end frame (2).
13. Remove seal (17) from end frame (2). Discard seal (17).

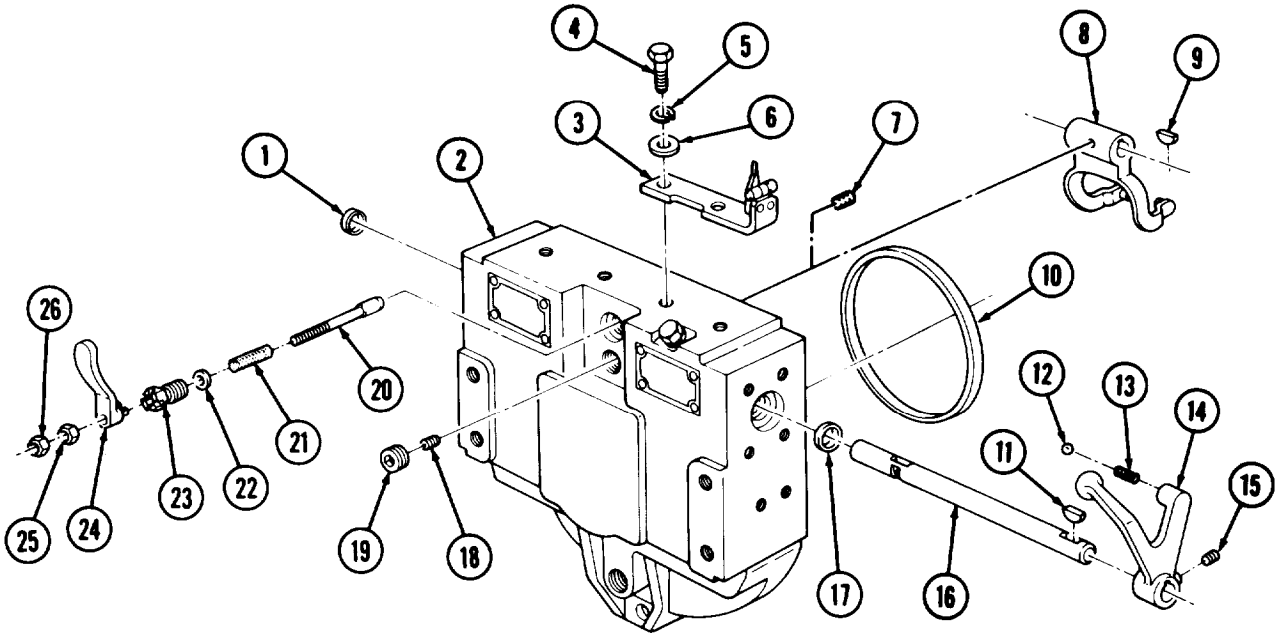

16-2. FRONT WINCH REPAIR (Contd)

c. Gearcase Disassembly

1. Remove four screws (29), cover (30), and gasket (28) from gearcase (27). Discard gasket (28).
2. Remove four screws (32), lockwashers (33), cover (34), and gasket(s) (35) from gearcase (27). Discard lockwashers (33) and gasket(s) (35).
3. Remove seal (31) from cover (34), Discard seal (31).
4. Remove six screw-assembled lockwashers (48), cover (49), and gasket (50) from brake housing (43). Discard screw-assembled lockwashers (48) and gasket (50).
5. Remove screw (44), washer (45), spring (46), and brake band (47) from brake housing (43) and brakedrum (39).
6. Remove screw (42), lockwasher (41), and washer (40) from brakedrum (39). Discard lockwasher (41).
7. Using puller, remove brakedrum (39) from brake housing (43).
8. Remove woodruff key (53) from worm shaft (54). Discard woodruff key (53).
9. Remove four screws (38), lockwashers (37), brake housing (43), and gasket (36) from gearcase (27). Discard lockwashers (37) and gasket (36).
10. Remove plug (51) and seal (52) from brake housing (43). Discard plug (51) and seal (52).
11. Remove breather (55) from gearcase (27).

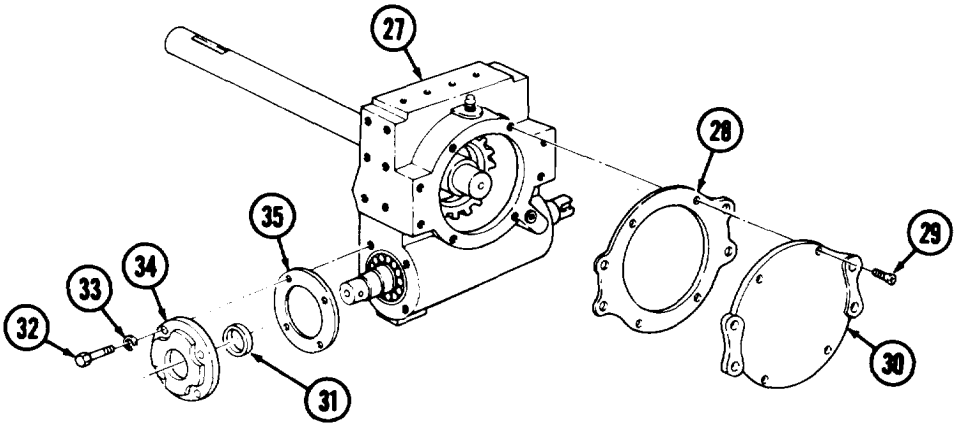

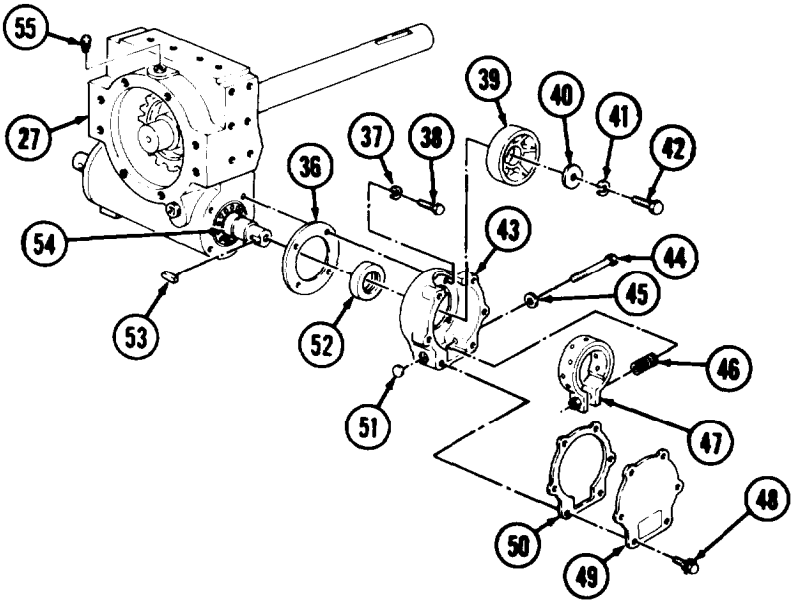

16-2. FRONT WINCH REPAIR (Contd)

12. Remove drum shaft (3) and worm gear (2) from gearcase (1).

CAUTION

Worm gear is a composite gear. Ensure hub is supported when pressing out shaft. Failure to do so may cause damage to gear.

13. Using arbor press, remove drum shaft (3) from worm gear (2).
14. Remove two woodruff keys (4) from drum shaft (3), Discard woodruff keys (4).
15. Using soft-head hammer, tap end of wormshaft (7) enough forbearing (5) to clear gearcase (1).
16. Using puller, remove bearing (5) from wormshaft (7).
17. Remove wormshaft (7) from gearcase (1).
18. Using puller, remove bearing (6) from wormshaft (7).

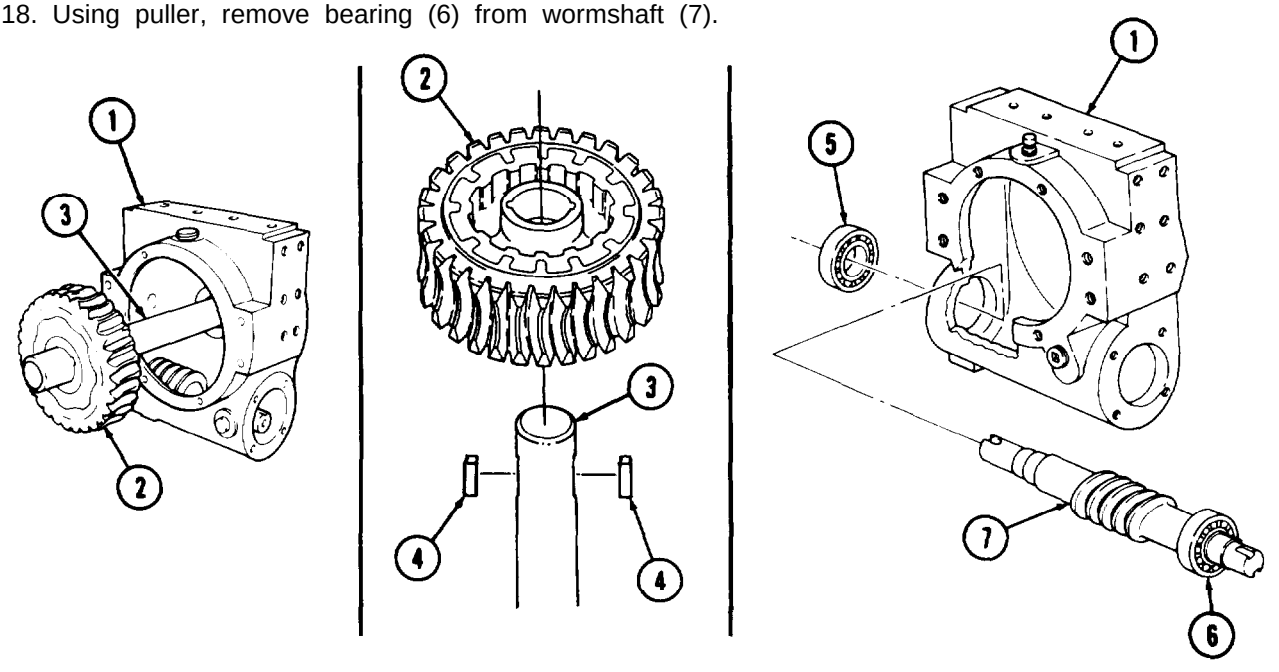

d. Cleaning Inspection, and Repair

1. For general cleaning instructions, refer to para. 2-8.
2. For general inspection instructions, refer to para. 2-9.
3. For general repair instructions, refer to para. 2-10.
4. Inspect clutch (8) and drag brake (15) for cracks, breaks, chips, and burrs. Replace clutch (8) or drag brake (15) if cracked, broken, chipped, or burred.
5. Inspect end frame thrust ring (9), drum thrust ring (10), drum (11), drum bushings (12), sleeve (13), sleeve bushing (14), and shift fork (16) for cracks, chips, nicks, scores, breaks, bends, and excessive wear. Refer to table 16-1, End Frame Wear Limits, for measurements. Replace part(s) if damaged or worn.

16-2. FRONT WINCH REPAIR (Contd]

6. Inspect shifter lock spring (17) and drag brake spring (18) for damaged coils, wear, and free length. Using spring tester, inspect drag brake spring (18) for compressed length. Refer to table 16-1, End Frame Wear Limits, for measurements. Replace shifter lock spring (17) or drag brake spring (18) if damaged or worn.

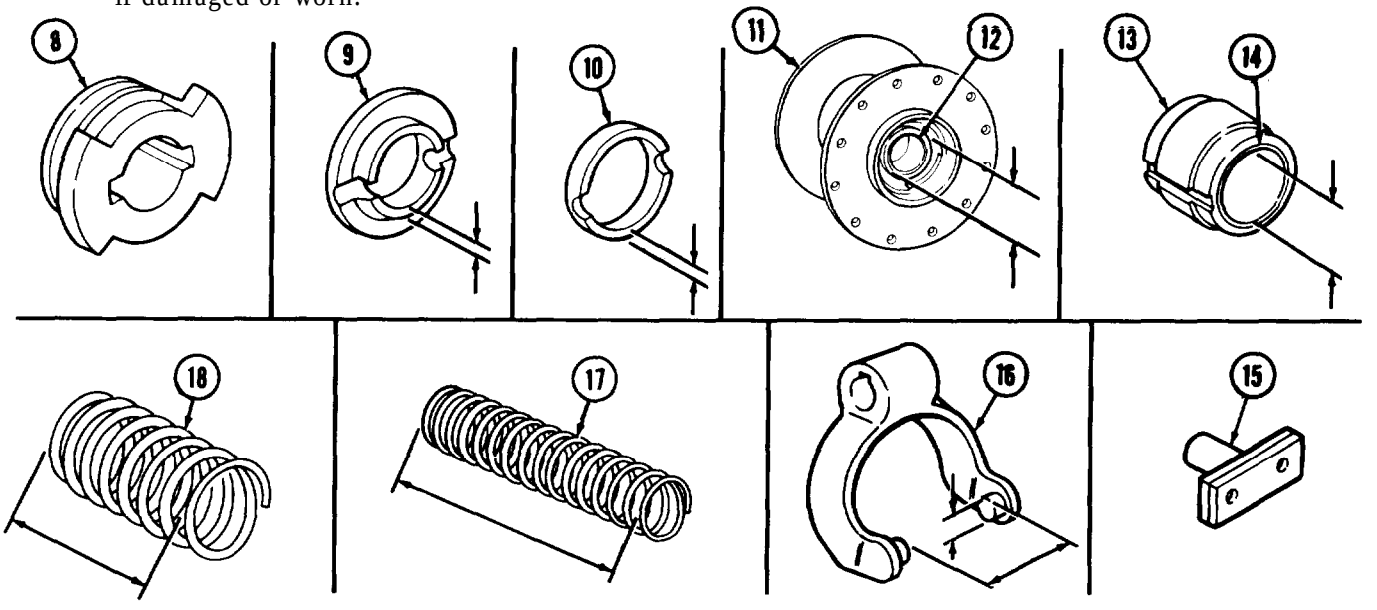

Table 16-1. End Frame Wear Limits.

ITEM NO.	ITEM/POINT OF MEASUREMENT	WEAR LIMITS/TOLERANCES	
		INCHES	MILLIMETERS
9	End frame thrust ring - thickness - minimum	0.486	12.34
10	Drum thrust ring - thickness - minimum	0.492	12.50
11	Drum		
12	Bushing - inner diameter – maximum	2.131	54.13
	Bushing bore (bushing (12) removed) - inner diameter - maximum	2,376	60.35
13	Sleeve		
14	Bushing - inner diameter - maximum	2.131	54.13
	Bushing bore (bushing (14) removed) - inner diameter - maximum	2.376	60.35
16	Shifter fork		
	Fork lug - outer diameter - minimum	0.486	12.34
	Fork lug spacing	2.968-3.032	75.39-77.01
17	Shifter lock spring free length	1.91	48.5
18	Drag brake spring		
	free length	1.50	38.1
	compressed length with 52 lb (23 kg) applied	1.00	25.4

16-2. FRONT WINCH REPAIR (Contd)

7. Inspect wormshaft (1), worm gear (2), drum shaft (3), two bearings (4), gearcase (5), gearcase bushinge (6), cover (7), cover bushing (8), and brakedrum (9) for chips, cracks, burrs, scores, damaged threads, and excessive wear. Refer to table 16-2, Front Winch Gearcase Wear Limits, for measurements. Replace part(s) if damaged or worn.
8. Inspect brake band (10) for cracks, breaks, missing rivets, glazed lining, and wear. Refer to table 16-2, Front Winch Gearcase Wear Limits, for measurements. Replace brake band (10) if damaged or worn.

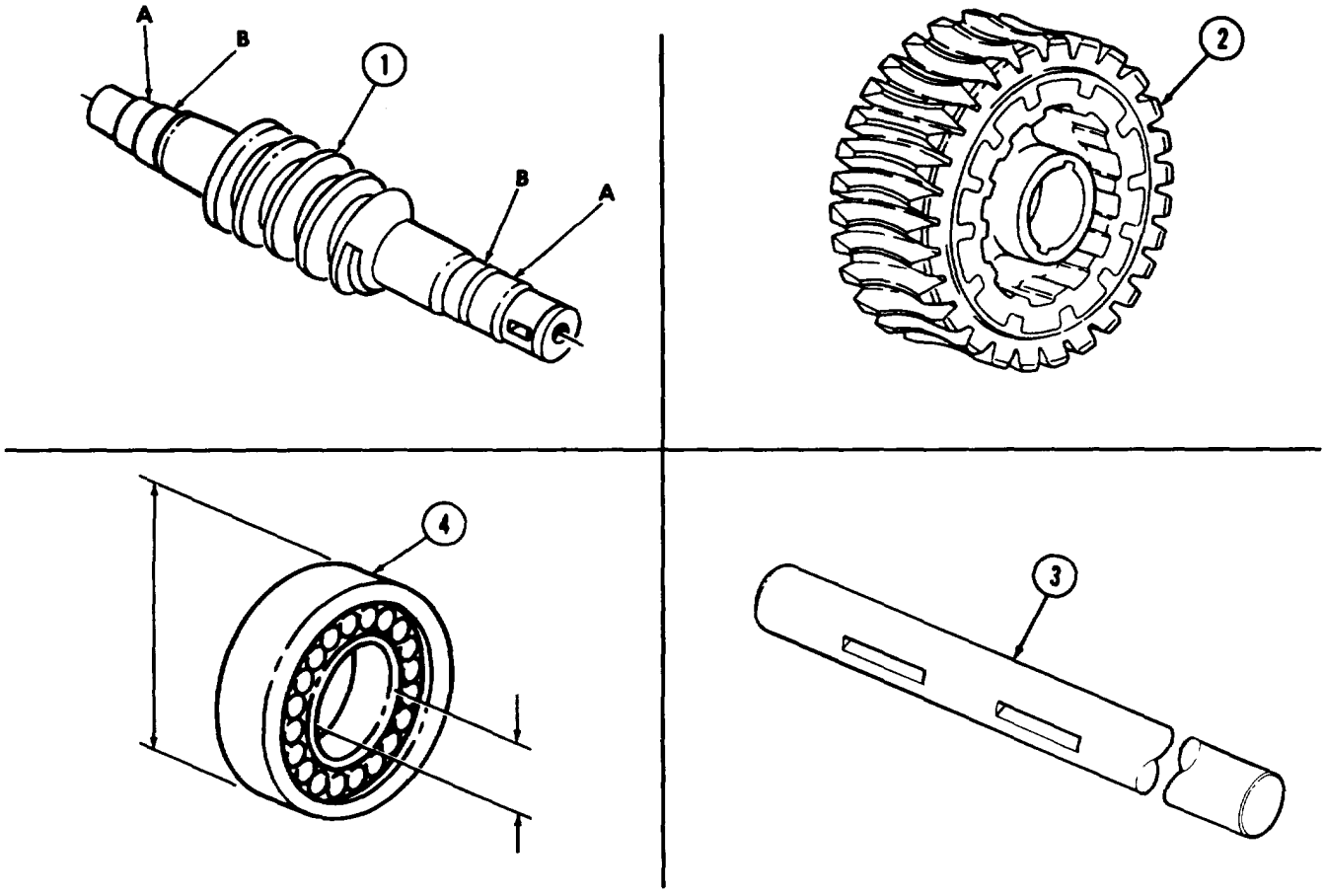

16-2. FRONT WINCH REPAIR (Contd)

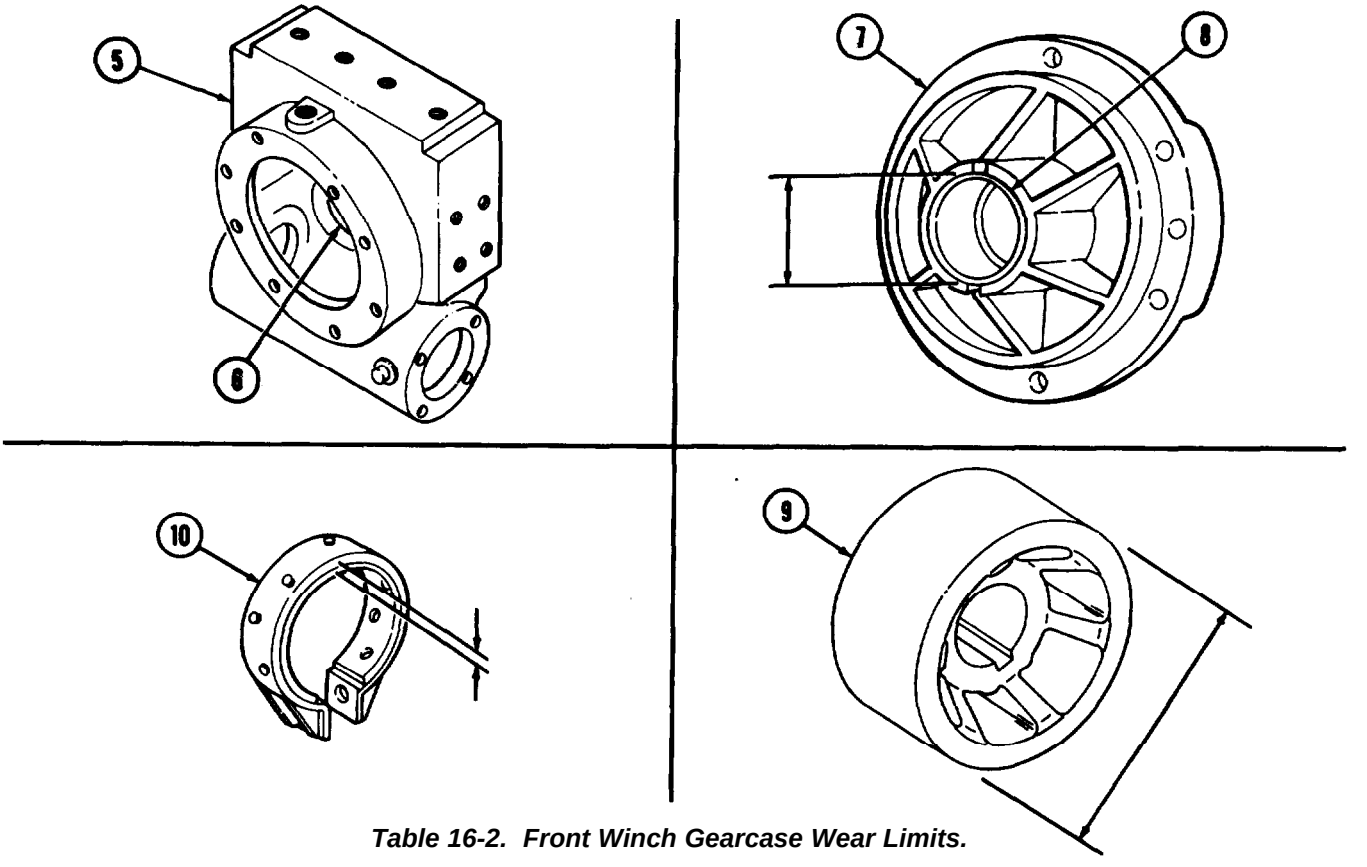

Table 16-2. Front Winch Gearcase Wear Limits.

ITEM NO.	ITEM/POINT OF MEASUREMENT	WEAR LIMITS/TOLERANCES	
		INCHES	MILLIMETERS
1	Wormshaft		
	(a) seal surface – outer diameter - minimum	1.765	44.83
	(b) bearing surface - outer diameter – minimum	1.771	44.98
3	Drum shaft - outer diameter - minimum	2.123	53.92
4	Bearings		
	Outer diameter - minimum	3.9304	99.832
	Inner diameter - maximum	1.7717	45.001
5	Gearcase		
6	Bushing - inner diameter – maximum	2.131	54.13
	Bushing bore (bushing (6) removed) - inner diameter - maximum	2.376	60.35
	Bearing bore	3.937	100.00
	Cover		
7	Bushing - inner diameter - maximum	2.131	54.13
8	Bushing bore (bushing (8) removed) - inner diameter - maximum	2.376	60.35
9	Brakedrum - outer diameter - minimum	4.992	126.80
10	Brake band - thickness - minimum	0.030	0.76

16-2. FRONT WINCH REPAIR (Contd)

e. Gearcase Assembly

NOTE

Coat all internal parts with gear oil before assembly.

1. Using arbor press, install bearing (3) on wormshaft (2).
2. Using arbor press, install wormshaft (2) in gearcase (1).
3. Using arbor press, install bearing (4) on wormshaft (2) in gearcase (1).
4. Install two new woodruff keys (6) on drum shaft (7).

CAUTION

Worm gear is a composite gear. Ensure hub is supported when pressing onto shaft. Failure to do so may cause damage to gear.

5. Using arbor press, install drum shaft (7) into worm gear (5). Press drum shaft (7) until woodruff keys (6) are flush with hub of worm gear (5).
6. Install drum shaft (7) and worm gear (5) in gearcase (1).
7. Install breather (23) on gearcase (1).
8. Apply sealing compound to outer edge of new seal (21) and install seal (21) in brake housing (15).
9. Coat new plug (20) with sealing compound and install plug (20) in brake housing (15).
10. Install new gasket (8) and brake housing (15) on gearcase (1) with four new lockwashers (9) and screws (10).
11. Install new woodruff key (22) on wormshaft (2).
12. Position brakedrum (11) on wormshatt (2) and brake housing (15) and install with washer (12), new lockwasher (13), and screw (14).
13. Position brake band (19) and spring (18) in brake housing (15) and around brakedrum (11) and install with washer (17) and screw (16). Do not tighten screw (16).

16-2. FRONT WINCH REPAIR (Contd)

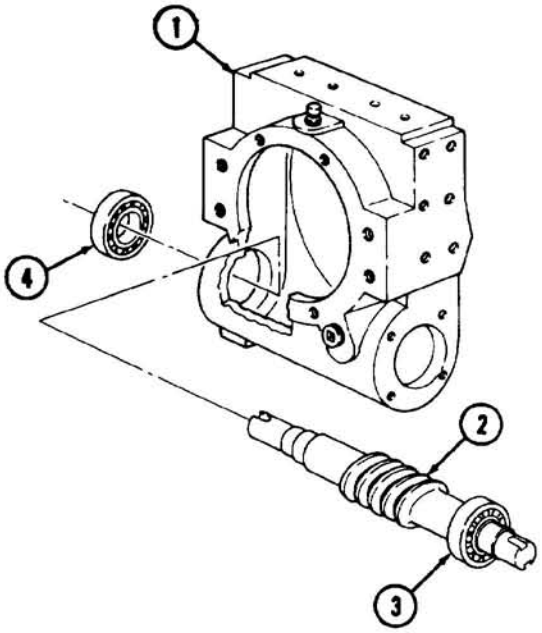

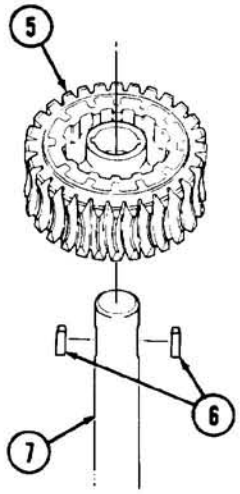

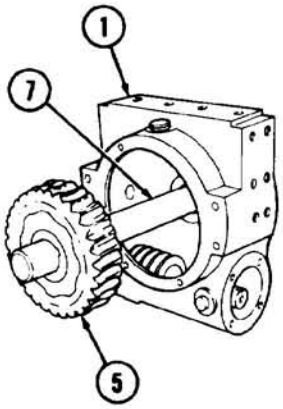

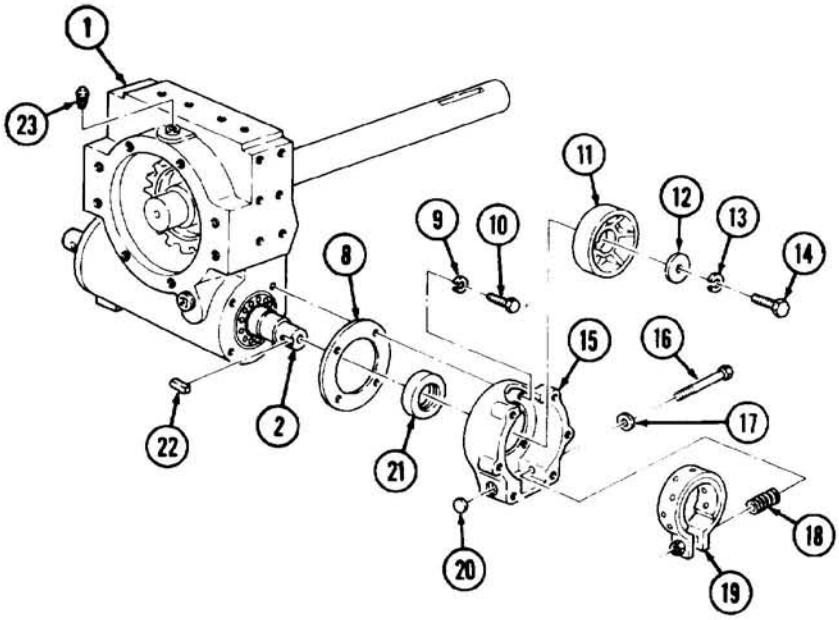

16-2. FRONT WINCH REPAIR (Contd)

14. Apply sealing compound to outer edge of new seal (4) and install seal (4) on cover (7).
15. Install new gasket(s) (3) and cover (7) on gearcase (1) with four new lockwashers (6) and screws (5).
16. Check endplay of wormshaft (2).
    a. Install dial indicator on gearcase (1) and position plunger on head of screw (8).
    b. Push wormshaft (2) toward brake housing (9) and set dial indicator to zero.
    c. Pull wormshaft (2) away from brake housing (9) and record dial indicator reading.
    d. Endplay of wormshaft (2) should be 0.005-0.015 in. (0.13-0.38 mm).
    e. If endplay is not within limits, remove cover (7) and add or remove gasket(s) (3). Repeat step 16 until endplay is correct.
    f. Remove dial indicator from gearcase (1).
17. Install new gasket (10) and cover (11) on brake housing (9) with six new screw-assembled lockwashers (12).

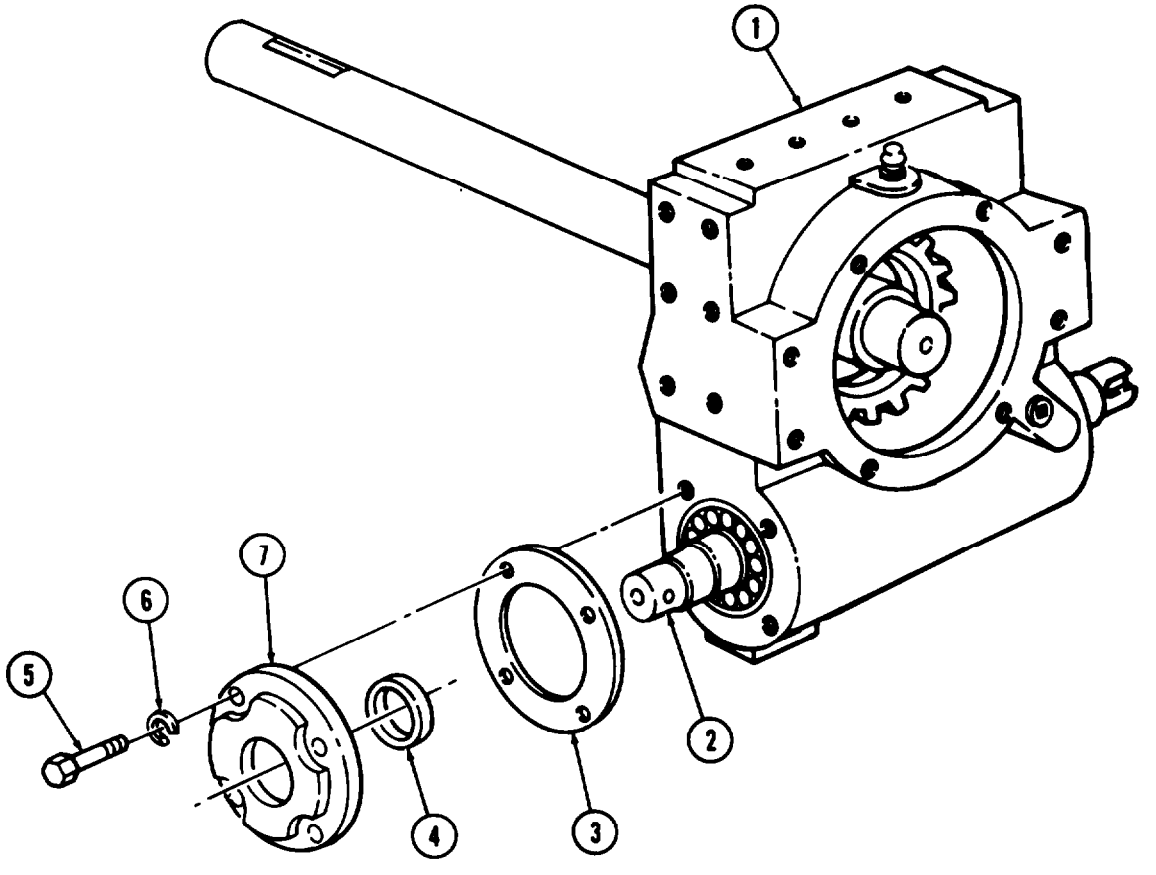

16-2. FRONT WINCH REPAIR (Contd)

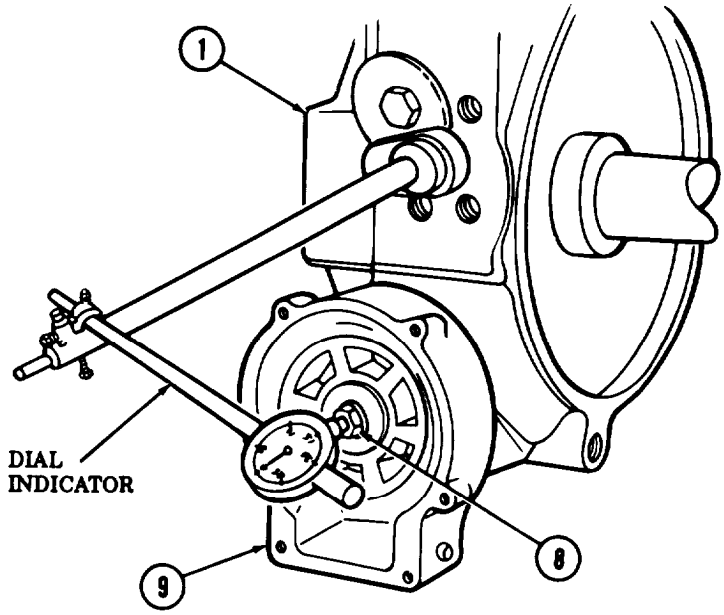

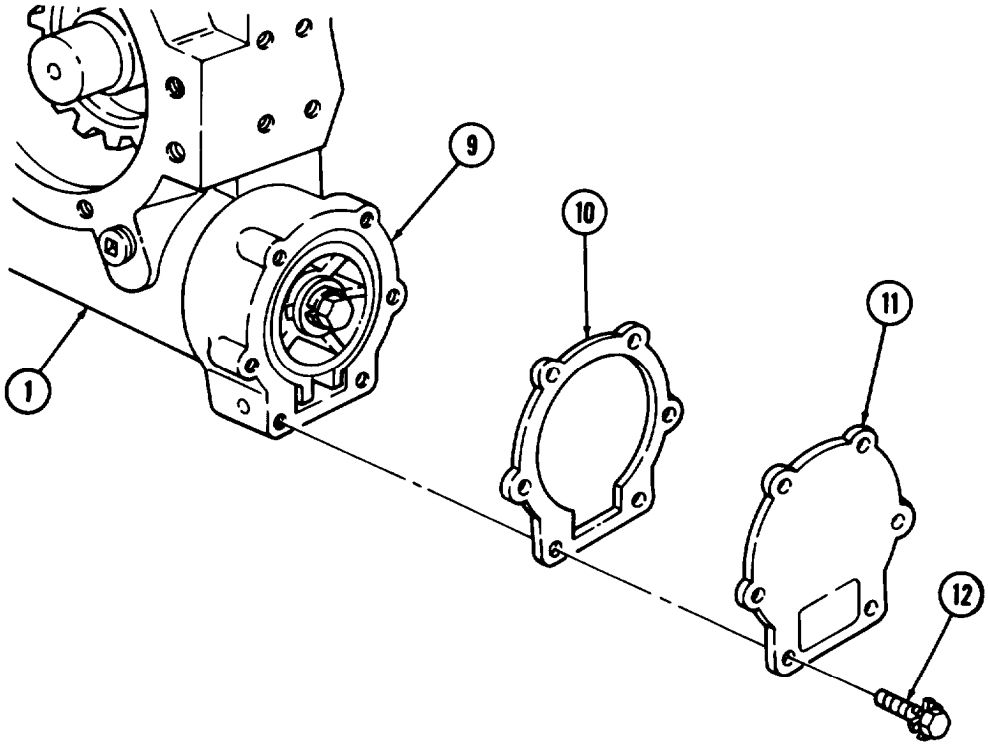

16-2. FRONT WINCH REPAIR (Contd)

f. End Frame Assembly

1. Apply sealing compound to outer edge of new seal (17). Install seal (17) on end frame (2).
2. Insert shifter shaft (16) in end frame (2).
3. Install new woodruff key (9) on shifter shaft (16) and drive shifter shaft (16) into shift fork (8) with soft-head hammer.
4. Install setscrew (18) on shift fork (8).
5. Install lock (3) on end frame (2) with two washers (6), new lockwashers (5), and screws (4).
6. Install new woodruff key (11) on shifter shaft (16).
7. Install spring (13) and ball (12) in shifter handle (14).
8. Install shifter handle (14) on shifter shaft (16). Ensure ball (12) rests in detents on lock (3). Install setscrew (15) in shifter handle (14).
9. Apply sealing compound to outer edge of new seal (10) and install on end frame (2).
10. Install pipe plugs (7) and (19) on end frame (2).
11. Install shoulder pin (20), spring (21), spacer (22), bolt (23), and latch (24) on end frame (2) with nut (25) and jamnut (26).
12. Coat new expansion plug (1) with sealing compound. Install new expansion plug (1) on end frame (2).

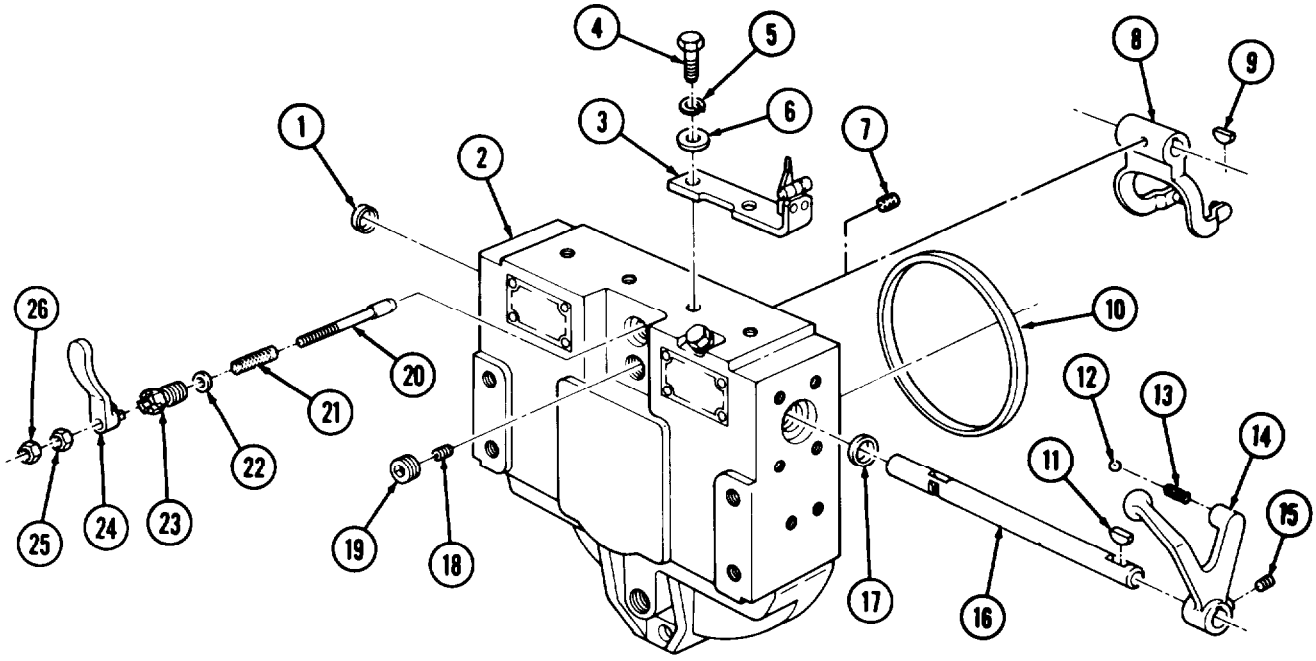

16-2. FRONT WINCH REPAIR (Contd)

g. Winch Assembly

NOTE

Assistant will help with step 1.

1. Turn gearcase (30) to the ground so drum shaft (31) is vertical.

WARNING

Stabilize winch while sitting vertical. Failure to do so may result in injury to personnel.

2. Install new seal (33) and thrust washer (27) on drum (28).
3. Install drum (28) on drum shaft (31).
4. Install two new woodruff keys (32) on drum shaft (31).
5. Install tie rod (29) on gearcase (30).
6. Install clutch (37), thrust ring (38), and sleeve (39) on drum shaft (31).
7. Install spring (35) and drag brake (36) in end frame (2) with setscrew (34).
8. Install end frame (2) on drum (28), drum shaft (31), and tie rod (29). Ensure grooves in sleeve (39) engage shift fork (8).
9. Install nut (40) on tie rod (29).

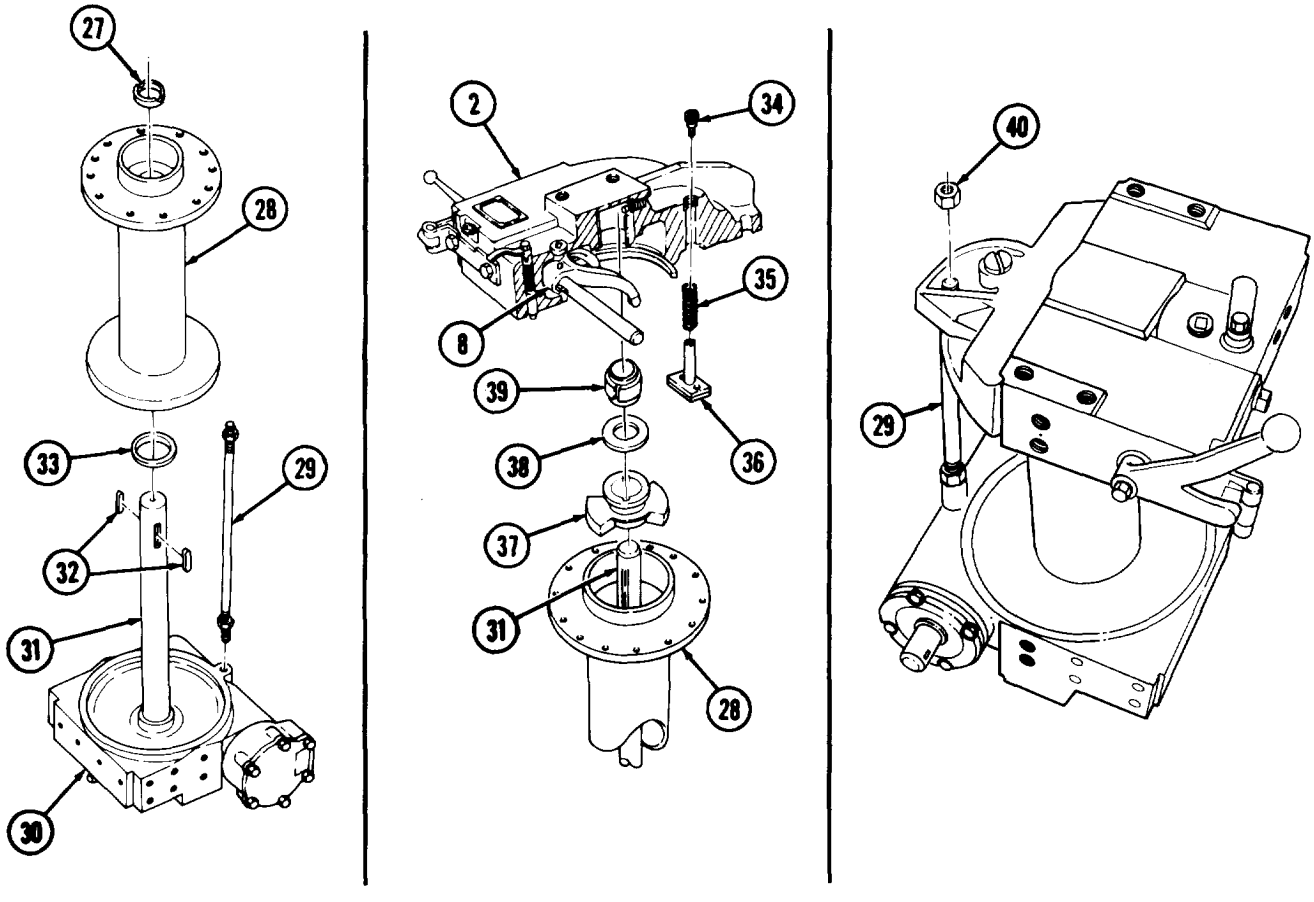

16-2. FRONT WINCH REPAIR (Contd)

NOTE

Assistant will help with step 10.

10. Rotate winch (8) so drum (4) is horizontal.

NOTE

Perform steps 11 and 12 if front winch is not equipped with level wind assembly.

11. Install side channel (7) on winch (8) with four new lockwashers (5) and screws (6). Do not tighten screws (6).
12. Install top channel (1) on winch (8) with four new lockwashers (3) and screws (2). Do not tighten screws (2).
13. Install dial indicator on gearcase (9) and position plunger on drum shaft (10).
14. Measure endplay of drum shaft (10) as follows:
    a. Push drum shaft (10) back in gearcase (9) and set dial indicator to zero.
    b. Pull drum shaft (10) forward in gearcase (9) and record dial indicator reading.
    c. If endplay is not within 0.005-0.015 in. (O. 13-0.38 mm), turn tie rod (11) clockwise or counterclockwise. Repeat endplay check until reading is within limits.
15. Tighten two nuts (12) and four screws (2) and (6).
16. Remove dial indicator from gearcase (9).
17. Apply GAA grease to new gasket (13) and install gasket (13) and cover (14) on gearcase (9) with four screws (15).

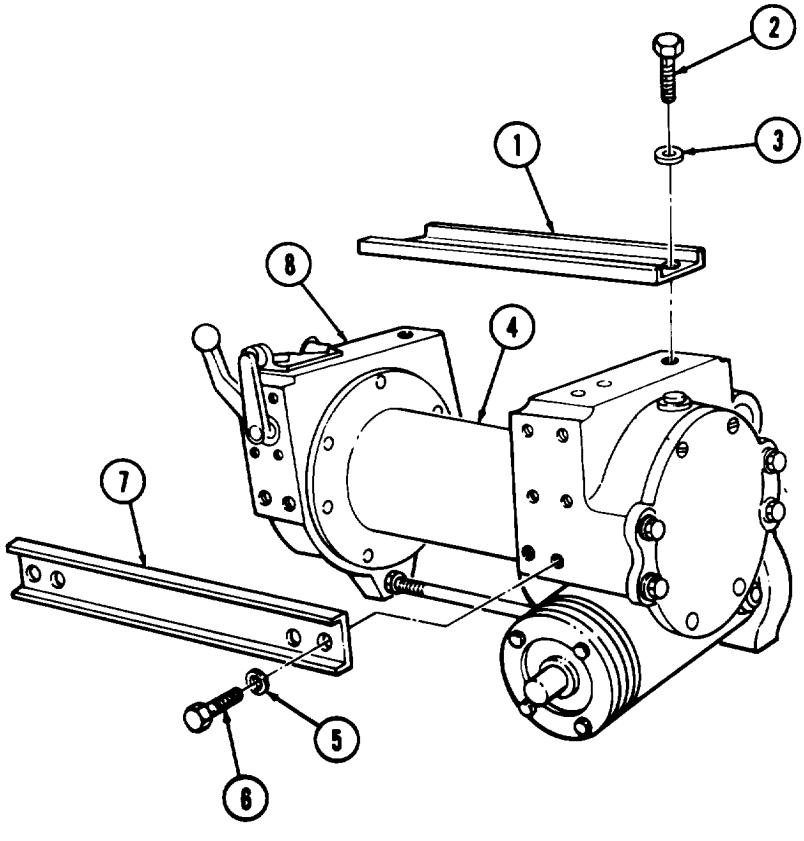

16-2. FRONT WINCH REPAIR (Contd)

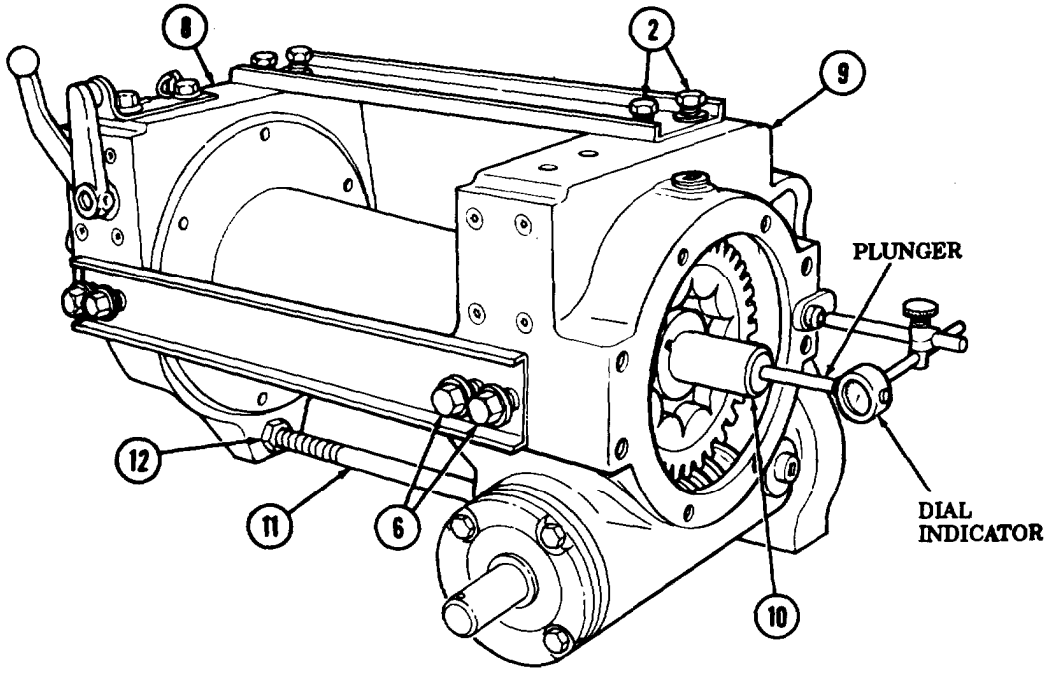

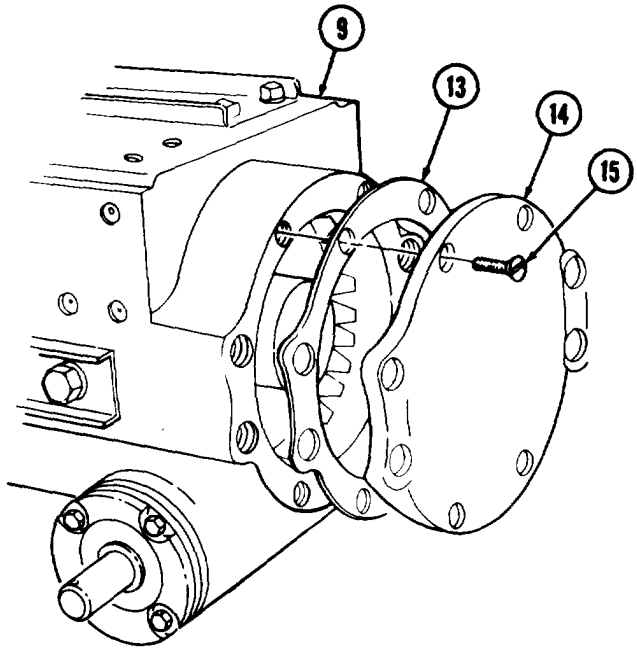

FOLLOW-ON TASKS:
- Install winch roller (para. 16-5).
- Install winch level wind (if equipped) (para. 16-3).
- Install winch (TM 9-2320-260-20).
- Fill winch with gear oil (LO 9-2320-260-12).
- Install winch cable (TM 9-2320-260-20).

16-3. FRONT WINCH LEVEL WIND MAINTENANCE

THIS TASK COVERS:

a. Removal
b. Disassembly
c. Cleaning and Inspection
d. Assembly
e. Installation

INITIAL SETUP

APPLICABLE MODELS
M816

TOOLS
General mechanic's tool kit (Appendix B, Item 1)
Arbor press (Appendix B, Item 7)
Outside micrometer (Appendix B, Item 8)
Inside micrometer (Appendix B, Item 9)

MATERIALS/PARTS
Eight lockwashers (Appendix D, Item 215)
Five lockwashers (Appendix D, Item 219)
TWO felt washers (Appendix D, Item 528)
Two felt washers (Appendix D, Item 530)
Felt washer (Appendix D, Item 531)

MATERIALS/PARTS (Contd)
Cotter pin (Appendix D, Item 36)
Felt seal (Appendix D, Item 477)
Locknut (Appendix D, Item 177)
GAA grease (Appendix C, Item 14)
Lubricating oil (Appendix C, Item 21)

REFERENCES (TM)
LO 9-2320-260-12
TM 9-2320-260-20
TM 9-2320-260-34P-2

EQUIPMENT CONDITION
Winch cable removed from level wind (TM 9-2320-260-20).

a. Removal

1. Remove four screws (5) and lockwashers (6) from base of track frame (16) and front winch (8). Discard lockwashers (6).
2. Remove track frame (16) with level wind (1) from front winch (8).

b. Disassembly

NOTE

Rectangular holes are provided for removing screws. Slide the level wind from side to side until screws are visible through holes,

1. Remove four screws (14) and lockwashers (15) from level wind (1) through holes (9). Discard lockwashers (15).
2. Remove two nuts (7) from stop screws (2). Record position in end plate of track frame (16) of stop screws (2) for installation.
3. Remove two stop screws (2) and jamnuts (3) from end plates of track frame (16).
4. Remove two nuts (13), lock latch (12), poppet nut (11), spring (10), and poppet (4) from track frame (16).

NOTE

All trolley wheels are removed the same.

5. Remove grease fitting (17), hollow screw (18) or solid screw (26), lockwasher (19), washer (20), felt washer (21), wheel (22), felt washer (21), and washer (20) from axle (24) and trolley frame (25). Discard felt washers (21) and lockwasher (19).

NOTE

Axles are removed only if they fail measurement and inspection.

6. Remove bearing (23) from wheel (22).

16-3. FRONT WINCH LEVEL WIND MAINTENANCE (Contd)

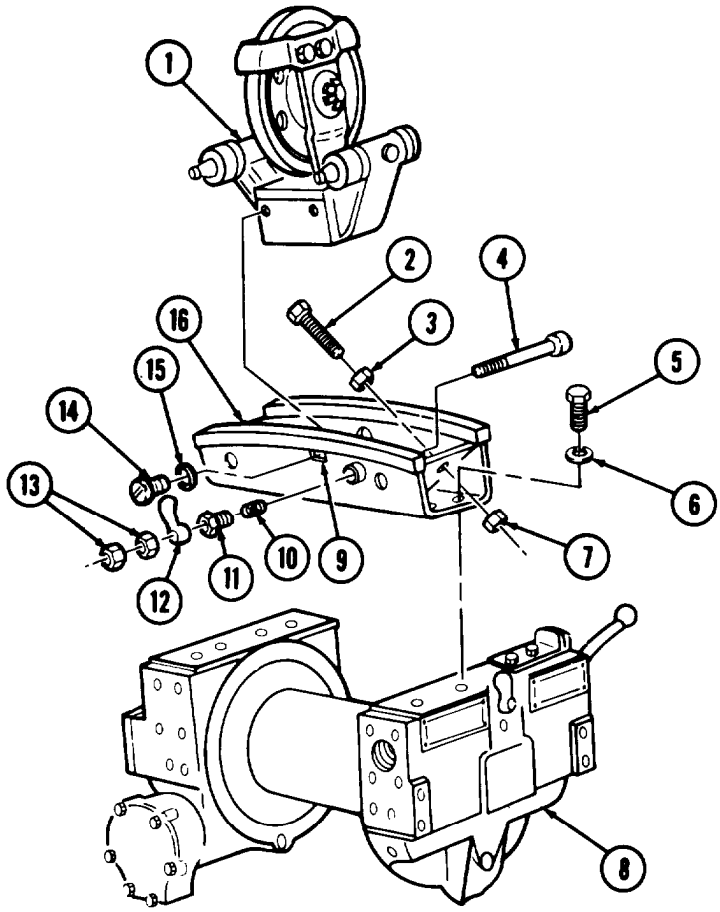

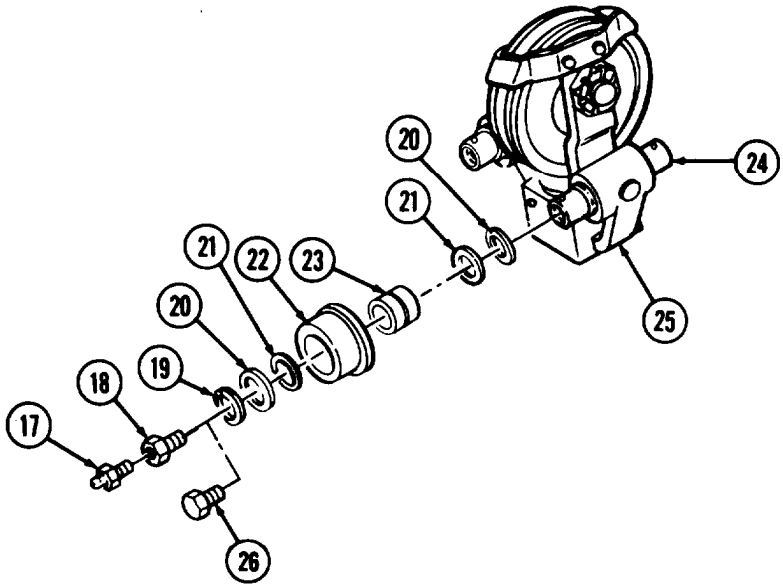

16-3. FRONT WINCH LEVEL WIND MAINTENANCE (Contd)

7. Remove four screws (5), lockwashers (4), and sheave guard (3) from sheave frame (12). Discard lockwashers (4).
8. Remove grease fitting (14), cotter pin (9), slotted nut (10), and washer (11) from special screw (13). Discard cotter pin (9).
9. Remove special screw (13) and sheave (6) from sheave frame (12).
10. Remove two thrust washers (1) and felt washers (2) from sheave (6). Discard felt washers (2).
11. Using arbor press, remove sleeve (8) and bearing (7) from sheave (6).
12. Remove grease fitting (16), nut (17), washer (18), and felt washer (19) from end of extension (20). Discard felt washer (19).
13. Using arbor press, press frame extension (20) and sheave frame (12) out of trolley frame (15).
14. Remove locknut (21) and press frame extension (20) out of sheave frame (12). Discard locknut (21).
15. Using arbor press, press bearing (22), inner race (23), twenty-six ball bearings (24), outer race (25), felt seal (26), and bushing (27) from trolley frame (15). Discard felt seal (26).

c. Cleaning and Inspection

1. For general cleaning instructions, refer to para. 2-8.
2. For general inspection instructions, refer to para. 2-9.

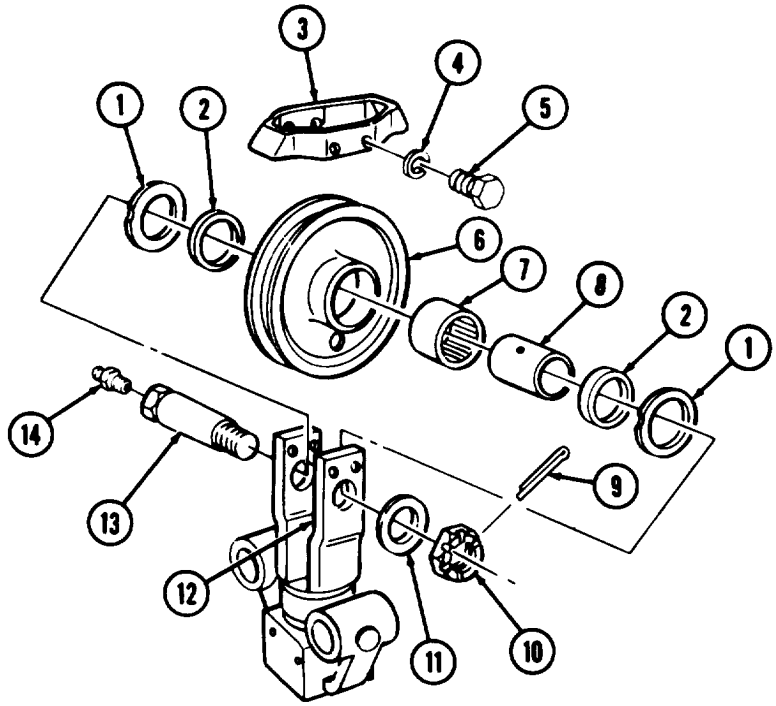

16-3. FRONT WINCH LEVEL WIND MAINTENANCE (Contd)

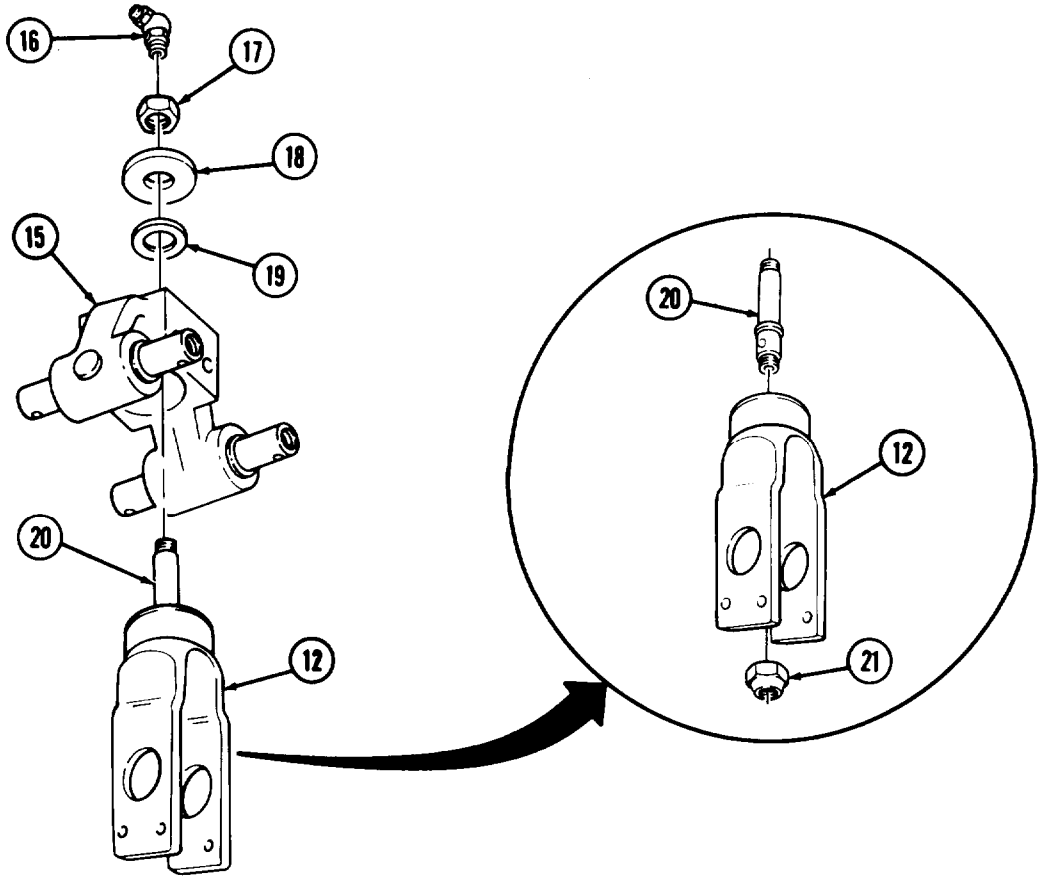

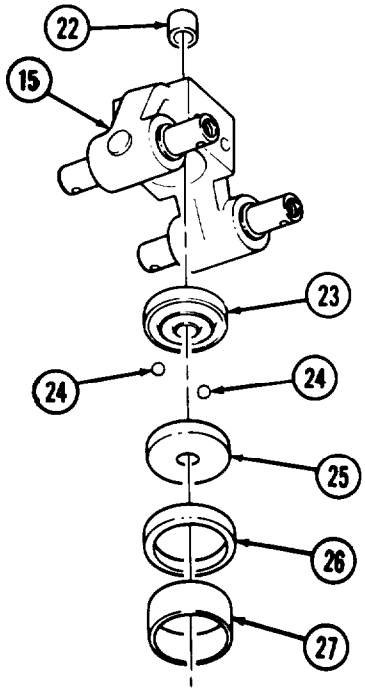

16-3. FRONT WINCH LEVEL WIND MAINTENANCE (Contd)

3. Inspect track frame (2) and four trolley wheels (3) for cracks, breaks, broken welds, and chips or nicked wheel surfaces (1). Repair or replace track frame (2) or trolley wheels (3) if cracked, broken, chipped, or nicked.
4. Inspect two axles (5) for cracks, breaks, obstructed lube holes (6), and nicked and scored thrust washer surfaces (7). Refer to table 16-3, Level Wind Parts Wear Limits, for measurements. Replace axle (5) if damaged or worn.

NOTE

Perform steps 5 and 6 if axle fails inspection in step 4.

5. Using arbor press, remove axle (5) from trolley frame (8).
6. Apply light coat of GAA grease to axle (5). Using arbor press, install axle (5) in trolley frame (8).

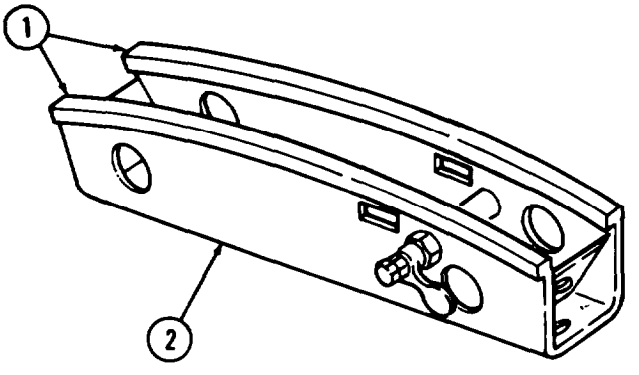

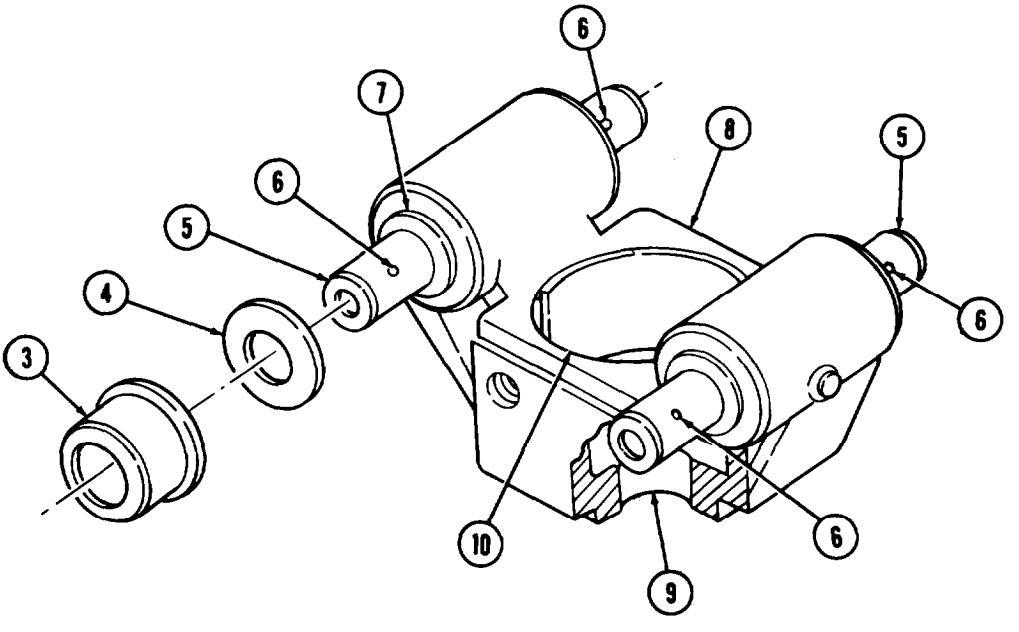

16-3. FRONT WINCH LEVEL WIND MAINTENANCE (Contd)

7. Inspect twenty-six ball bearings (17), trolley frame (8), outer race (16), and inner race (18) for pits, chips, cracks, or scoring. Replace part(s) if pitted, chipped, cracked, or scored.
8. Inspect four thrust washers (4), axle (5), trolley frame bores (9) and (10), two thrust washers (11) and (15), sheave (12), sleeve (14), bearing (13), bushing (19), and bearing (20) for cracks, breaks, scoring, pits, chips, and excessive wear. Refer to table 16-3, Level Wind Parts Wear Limits, for measurements. Replace part(s) if damaged or worn.

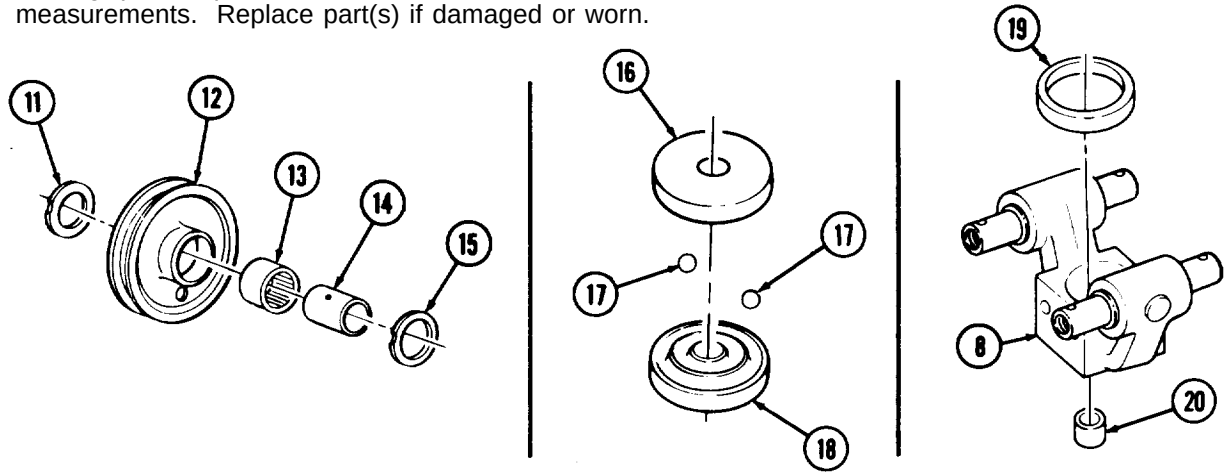

Table 16-3. Level Wind Parts Wear Limits.

ITEM NO.	ITEM/POINT OF MEASUREMENT	WEAR LIMITS/TOLERANCES	
		INCHES	MILLIMETERS
4	Thrust washer – thickness – minimum	0.058	1.47
5	Axle (4 places) - outer diameter – minimum	1.2495	31.737
9	Bushing bore – inner diameter – maximum	1.2505	31.763
10	Bushing bore – inner diameter – maximum	3.251	82.58
11,15	Sheave thrust washer – thickness – minimum	0.0615	1.562
12	Sheave bore – inner diameter – maximum	2.5005	63.513
13	Bearing		
	Inner diameter – maximum	2.1270	54.026
	Outer diameter - minimum	2.4995	63.487
14	Sleeve		
	Inner diameter – maximum	1.503	38.18
	Outer diameter – minimum	2.1244	53.960
19	Bushing		
	Inner diameter – maximum	3.005	76.33
	Outer diameter – minimum	3.252	82.60
20	Bearing		
	Inner diameter – maximum	1.0014	25.436
	Outer diameter – minimum	1.2495	31.737

16-3. FRONT WINCH LEVEL WIND MAINTENANCE (Contd)

d. Assembly

NOTE

- Ensure all felt seals are soaked in oil before installation.
- Ensure all bearings are packed with grease before installation.

1. Press short end of frame extension (11) into sheave frame (2) and install new locknut (1).
2. Coat inner race (9) with light coat of grease and place in trolley frame (7). Inner race (9) has no bevel on shaft bore.
3. Coat twenty-six ball bearings (6) with grease and place in groves of inner race (9).
4. Coat outer race (5) with light coat of grease and place in trolley frame (7). Ensure level side of outer race (5) is facing up and is seated over ball bearings (6).
5. Soak new felt seal (4) in lubricating oil and place in trolley frame (7).
6. Install bushing (3) in trolley frame (7) until it touches felt seal (4).
7. Coat bushing contact surface of sheave frame (2) with grease, and install in trolley frame (7). Using arbor press, press bushing (3) and frame (2) until shoulder (12) of frame extension (11) is seated in bevel (10) of outer race (5). Bushing (3) and felt seal (4) will be correctly seated at same time.
8. Install bearing (8) on frame extension (11).
9. Soak new felt washer (13) in lubricating oil and place over bearing (8) in bore of trolley frame (7).
10. Place washer (14) on frame extension (11) and install with nut (15).
11. Install grease fitting (16) in end of frame extension (11).

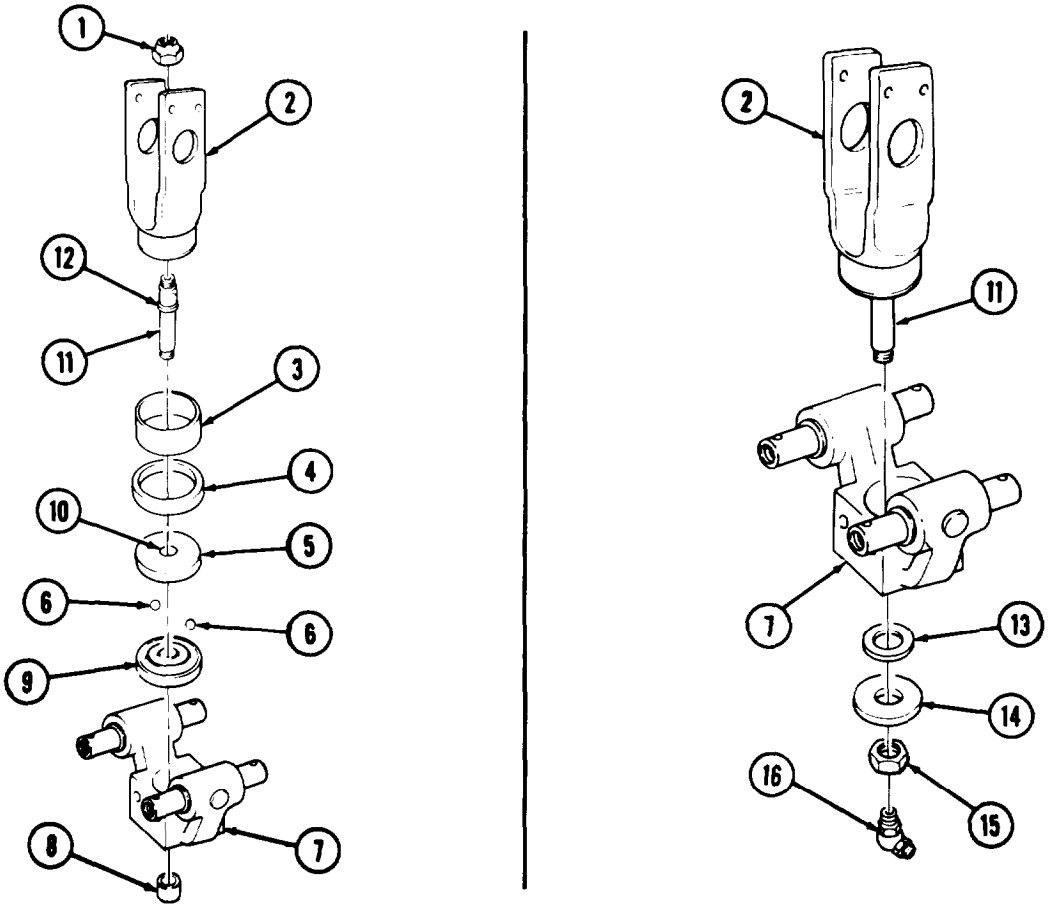

16-3. FRONT WINCH LEVEL WIND MAINTENANCE (Contd)

12. Pack bearing (23) with grease and place sleeve (24) in bearing (23).
13. Position sleeve (24) and bearing (23) in bore of sheave (22).
14. Soak two new felt washers (18) in lubricating oil and place in bore of sheave (22). Graphited surface of felt washers (18) must be against sheave (22).
15. Aline sheave (22), bearing (23), sleeve (24), and two thrust washers (17) in sheave frame (2).
16. Insert special screw (28) through sheave frame (2) and sleeve (24) and install with washer (27) and slotted nut (26).
17. Aline slotted nut (26) with hole in special screw (28) and install new cotter pin (25). Bend ends of cotter pin (25) around nut (26).
18. Install grease fitting (29) in head of special screw (28).
19. Install sheave guard (19) on sheave frame (2) with four new lockwashers (20) and screws (21).

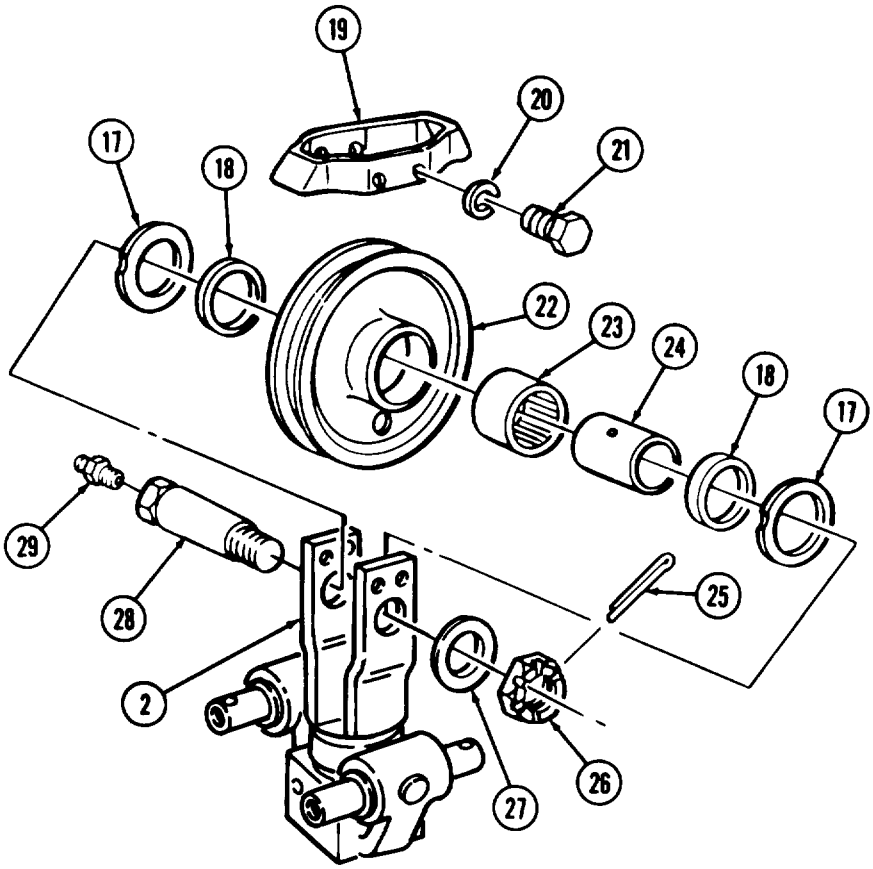

16-3. FRONT WINCH LEVEL WIND MAINTENANCE (Contd)

NOTE

Both sets of winch trolley wheels are installed the same.

20. Pack bearing (7) with grease and place in trolley wheel (6),
21. Soak two new felt washers (5) in lubricating oil and place one on each end of bearing (7).
22. Place two washers (4) in trolley wheel (6) over each felt washer (5).
23. Place trolley wheel (6) on axle (8).

NOTE

Install hollow screws on same side of level wind assembly that faces front of winch.

24. Install new lockwasher (3) and hollow screw (2) or solid screw (9) on end of axle (8) that faces front of winch.
25. Install grease fitting (1) in hollow screw (2).
26. Install poppet (13) and spring (18) on track frame (24) with poppet nut (19).
27. Install latch (20) on poppet (13) with two nuts (21).
28. Install two jamnuts (12) on stop screws (11) to recorded position.
29. Insert stop screws (11) through end plates of track frame (24) and install with two nuts (16).

NOTE

Roll level wind back and forth as needed to allow access to screw holes through rectangular slots in track frame.

30. Position level wind (10) on track frame (24) and install with four new lockwashers (23) and screws (22). Ensure level wind (10) travels freely on tracks of track frame (24) and poppet (13) engages and holds level wind (10) in locked position.

e. Installation

Install track frame (24) with level wind (10) on front winch (17) with four new lockwashers (15) and screws (14).

16-3. FRONT WINCH LEVEL WIND MAINTENCE (Contd)

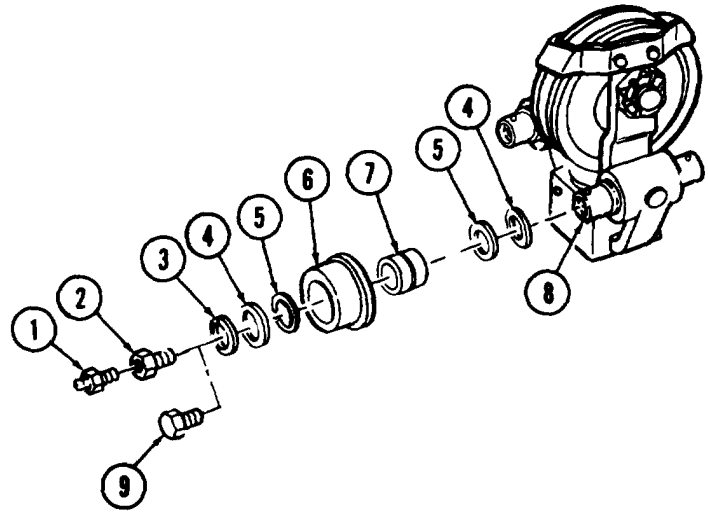

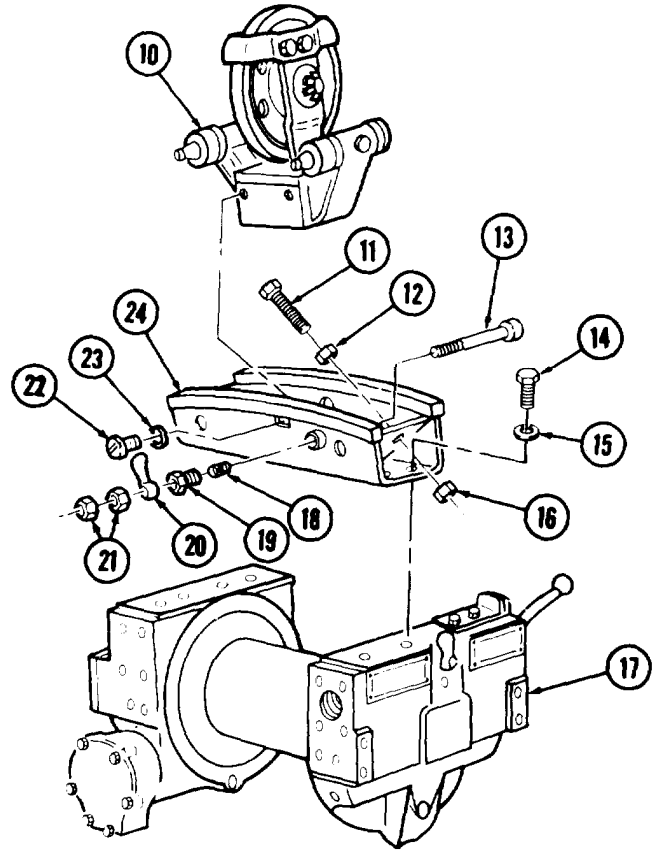

FOLLOW-ON TASKS:
- Install winch cable (TM 9-2320-260-20).
- Lubricate level wind assembly (LO 9-2320-260-12).

16-4. FRONT WINCH CABLE TENSIONER MAINTENANCE

THIS TASK COVERS:

a. Removal
b. Disassembly
c. Cleaning and Inspection
d. Assembly
e. Installation

INITIAL SETUP

APPLICABLE MODELS
M816

TOOLS
General mechanic's tool kit (Appendix B, Item 1)
Soft-head hammer (Appendix B, Item 47)

MATERIALS/PARTS
Eight lockwashers (Appendix D, Item 216)
Woodruff key (Appendix D, Item 557)
Four felt washers (Appendix D, Item 532)

MATERIALS/PARTS (Contd)
GAA grease (Appendix C, Item 14)
Lubricating oil (Appendix C, Item 21)

REFERENCES (TM)
LO 9-2320-260-12
TM 9-2320-260-10
TM 9-2320-260-20
TM 9-2320-260-34P-2

EQUIPMENT CONDITION
- Parking brake set (TM 9-2320-260-10).
- Winch cable removed (TM 9-2320-260-20).

a. Removal

1. Remove four nuts (1), lockwashers (2), and screws (5) from roller (4) and cable tensioner (14). Discard lockwashers (2).
2. Remove cable tensioner (14), shim (7), and spacer plate (6) from roller (4).

b. Disassembly

1. Remove two grease fittings (3) from cable tensioner (14) shafts (12) and (13).
2. Remove setscrew (10), handle (9), and woodruff key (8) from shaft (12). Discard woodruff key (8).
3. Loosen poppet nut (17) and remove poppet unit (11) from handle (9).
4. Remove nut (15), latch (16), poppet nut (17), and spring (18) from poppet (19).

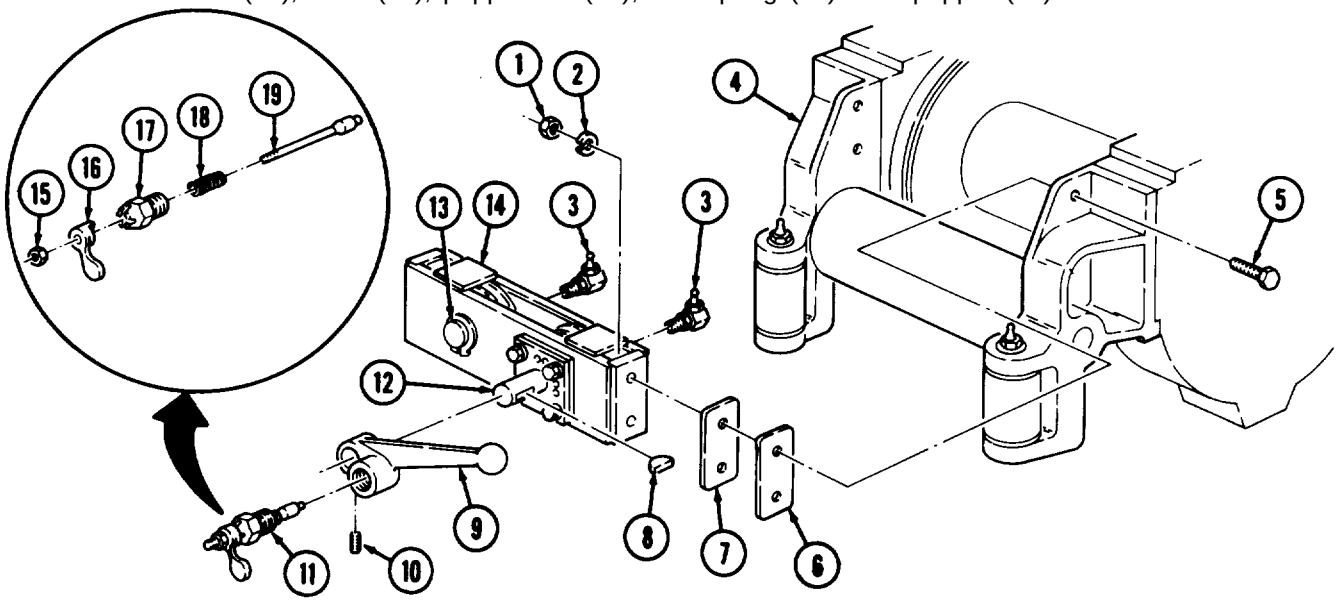

16-4. FRONT WINCH CABLE TENSIONER MAINTENANCE (Contd)

5. Remove two snaprings (22) from shaft (1).
6. Remove shaft (1) from tensioner frame (23) and sheave (21).
7. Remove sheave (21) and two thrust washers (18) from tensioner frame (23).
8. Remove two felt washers (19) and bearing (20) from sheave (21). Discard felt washers (19).
9. Remove four screws (29), lockwashers (30), and block (28) from tensioner frame (23). Discard lockwashers (30).
10. Using hammer and brass drift, remove shaft (9) from sheave (27) and tensioner frame (23).
11. Remove sheave (27) and two thrust washers (24) from tensioner frame (23).
12. Remove two felt washers (25) and bearing (26) from sheave (27). Discard felt washers (25).

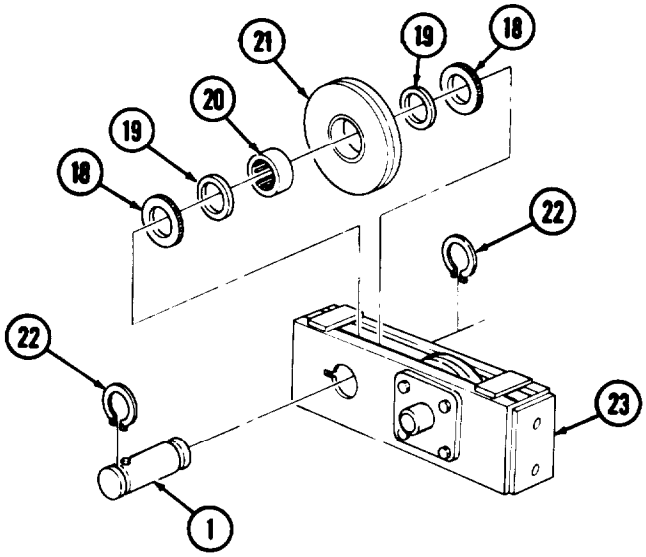

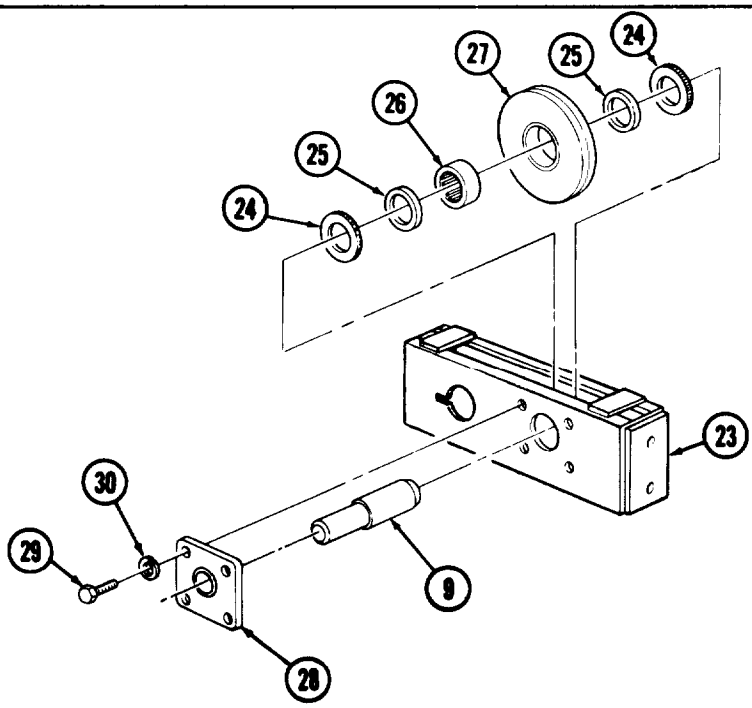

16-4. FRONT WINCH CABLE TENSIONER MAINTENANCE (Contd)

c. Cleaning and Inspection

1. For general cleaning instructions, refer to para. 2-8.
2. For general inspection procedures, refer to para. 2-9.
3. Inspect tensioner frame (1), two sheaves (2), two bearings (3), four thrust washers (4), bushings (5) and (6), shaft (7), pin (8), shaft (9), and block (10) for breaks, cracks, bends, chips, scoring, and excessive wear. Refer to table 16-4, Cable Tensioner Parts Wear Limits, for measurements. Replace part(s) if damaged or worn.

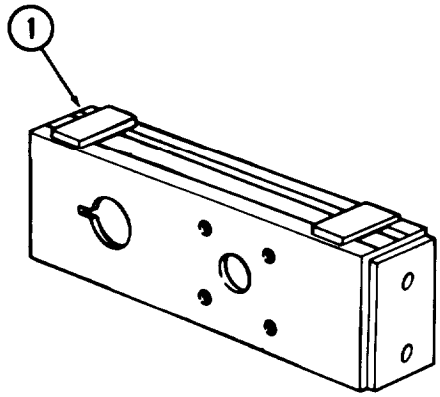

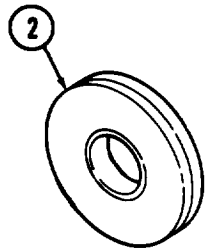

16-4. FRONT WINCH CABLE TENSIONER MAINTENANCE (Contd)

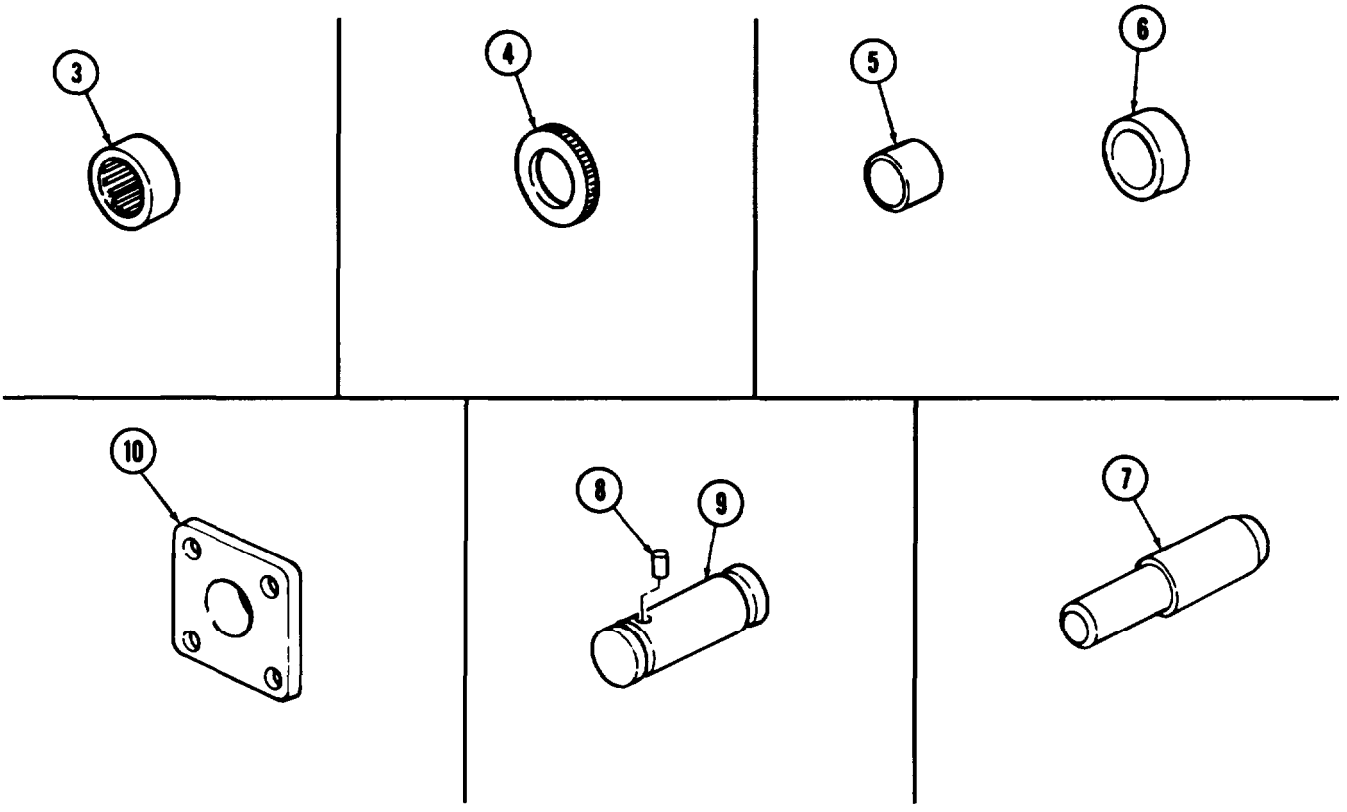

Table 16-4. Cable Tensioner Parts Wear Limits.

ITEM NO.	ITEM/POINT OF MEASUREMENT	WEAR LIMITS/TOLERANCES	
		INCHES	MILLIMETERS
1	Tensioner frame		
	Pin bore (2 places) - inner diameter – maximum	1.003	25.48
	Shaft bore (rear only) - inner diameter - maximum	1,000	25.40
	Bushing surface - outer diameter - minimum	0.748	19.00
2	Sheave bore - inner diameter - maximum	1.4997	38.092
	Hub - thickness - minimum	1.230	31.24
3	Bearing		
	Inner diameter - maximum	1.0000	25.400
	Outer diameter - minimum	1.4495	36.817
4	Thrust washer - thickness - minimum	0.062	1.57
5,6	Bushing		
	Inner diameter - maximum	0.754	19.15
	Outer diameter - minimum	1.0025	25.464
7	Shaft		
	Caroming surface - outer diameter - minimum	0.9995	25.39
9	Shaft - outer diameter – minimum	0.995	25.27
10	Block bore - inner diameter - maximum	1.005	25.527

16-4. FRONT WINCH CABLE TENSIONER MAINTENANCE (Contd)

1. Pack bearing (3) with GAA grease and install in bore of sheave (4). Center bearing (3) in bore.
2. Soak two new felt washers (2) in lubricating oil and install on each side of bearing (3) in sheave (4).
3. Install snapring (10) on shaft (8) and coat shaft (8) with light coat of GAA grease.
4. Position sheave (4) and two thrust washers (1) in tensioner frame (6), aline with bore (7), and install with shaft (8) and snapring (5). Ensure pin (9) seats in notch of bore (7),

NOTE

Perform steps 5 and 6 if bushings were removed.

5. Install bushing (18) in block (19). Seat bushing (18) flush to slightly below inside edge of block (19).
6. Install bushing (15) in tensioner frame (6). Seat bushing (15) flush to slightly below inside edge of reinforcement plate in tensioner frame (6).
7. Pack bearing (13) with GAA grease and install in sheave (14). Center bearing (13) in bore.
8. Soak two new felt washers (12) in lubricating oil and install on each side of bearing (13) in sheave (14).
9. Coat shaft (17) with light coat of GAA grease.
10. Position sheave (14) and two thrust washers (11) in tensioner frame (6), aline with bore (16), and install with shaft (17), short end of shaft (17) installed first.
11. Install block (19) on shaft (17) and tensioner frame (6) with four new lockwashers (21) and screws (20).
12. Install new woodruff key (29) in shaft (17).
13. Install handle (30) on shaft (17). Tap handle (30) with soft-head hammer.
14. Install setscrew (31) in handle (30).
15. Install poppet spring (37), poppet nut (35), and latch (38) on poppet (36) with nut (34).
16. Install poppet unit (32) in shaft (17) with poppet nut (35).
17. Install two grease fittings (24) on shafts (8) and (17). Ensure ends of grease fittings (24) point up.

e. Installation

Install cable tensioner (33) on roller (25) with shim (28), spacer plate (27), four screws (26), new lockwashers (23), and nuts (22).

16-4. FRONT WINCH CABLE TENSIONER MAINTENANCE (Contd)

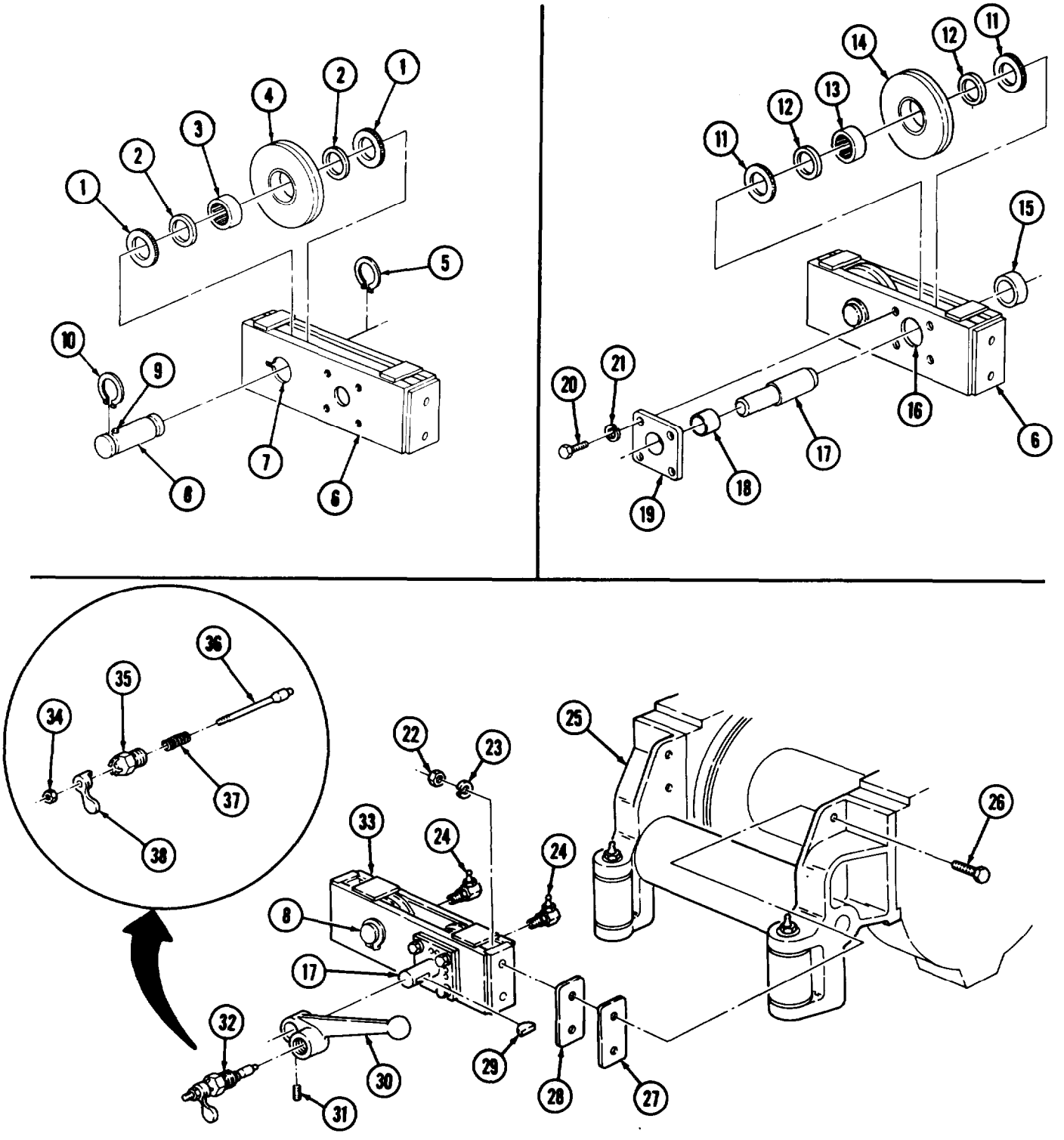

FOLLOW-ON TASKS:
- Install winch cable (TM 9-2320-260-20).
- Lubricate winch cable tensioner (LO 9-2320-260-12).

16-5. FRONT WINCH ROLLER MAINTENANCE

THIS TASK COVERS:

a. Removal
b. Disassembly
c. Cleaning and Inspection
d. Assembly
e. Installation

INITIAL SETUP

APPLICABLE MODELS
All

TOOLS
General mechanic's tool kit (Appendix B, Item 1)

MATERIALS/PARTS
Twelve lockwashers (Appendix D, Item 219)
Two lockwashers (Appendix D, Item 215)
Two felt washers (Appendix D, Item 533)
Lubricating oil (Appendix C, Item 21)

REFERENCES (TM)
LO 9-2320-260-12
TM 9-2320-260-20
TM 9-2320-260-34P-2

EQUIPMENT CONDITION
- Winch cable removed (TM 9-2320-260-20).
- Cable tensioner removed (if installed) (para. 16-4).

a. Removal

1. Remove eight screws (5) and lockwashers (6) from winch roller (1). Discard lockwashers (6),
2. Remove four screws (4) and lockwashers (3) from winch roller (1). Discard lockwashers (3),

NOTE

Assistant will help with step 3.

3. Remove winch roller (1) from winch (2).

b. Disassembly

1. Remove two grease fittings (7) from ends of roller shaft (10).
2. Remove left roller bracket (8) and thrust washer (9) from roller shaft (10).
3. Remove roller (13) and thrust washer (14) from roller shaft (10).
4. Remove two felt washers (11) and bearings (12) from roller (13). Discard felt washers (11).
5. Remove two setscrews (16) from right roller bracket (15) and roller shaft (10).
6. Remove roller shaft (10) from right roller bracket (15).

16-5. FRONT WINCH ROLLER MAINTENANCE (Contd)

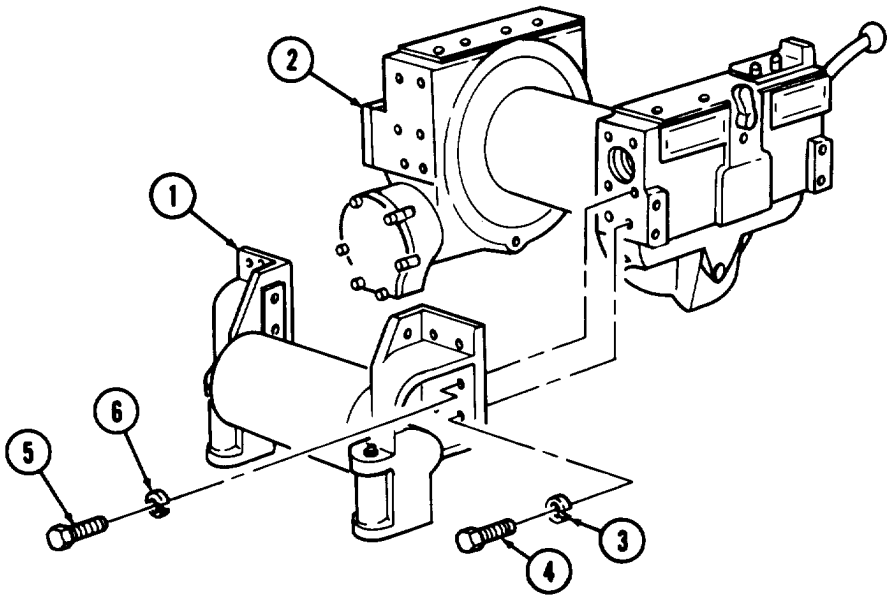

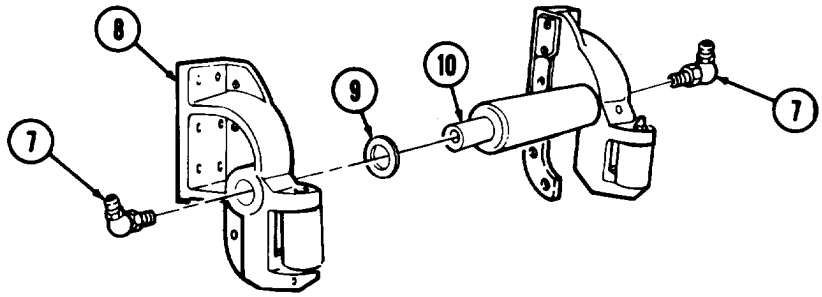

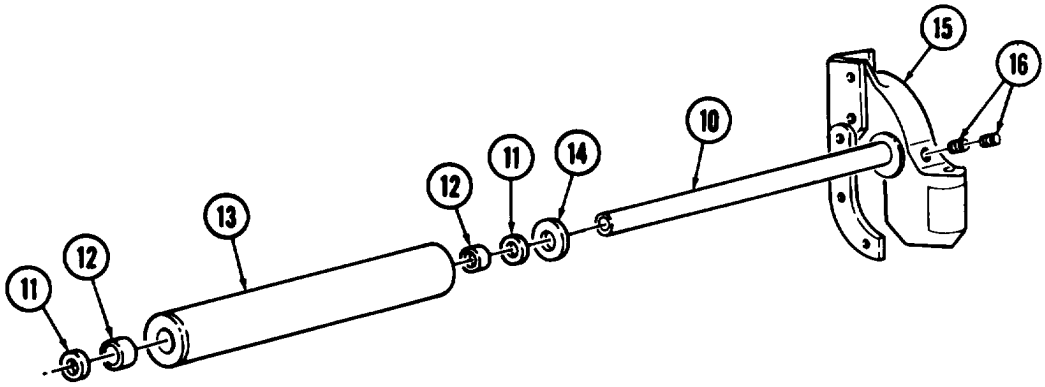

16-5. FRONT WINCH ROLLER MAINTENANCE (Contd)

NOTE

- Both side rollers and brackets are disassembled the same. This procedure is for the right side roller and bracket.
- Perform steps 7 and 8 for front winch model 7412382.

7. Remove three screws (1) and rub bar (13) from bracket (4).
8. Remove two nuts (2), lockwashers (3), washers (6), screws (7), and bracket (4) from roller bracket (5). Discard lockwashers (3).
9. Remove grease fitting (8) from top end of pin (9).
10. Remove drive pin (12) from roller bracket (5) and pin (9).
11. Remove pin (9) from roller bracket (5) and side roller (11) assembly.
12. Remove two thrust washers (10) and side roller (11) from roller bracket (5).

c. Cleaning and Inspection

1. For general cleaning instructions, refer to para. 2-8.
2. For general inspection instructions, refer to para. 2-9.

NOTE

Perform step 3 for winch model 7412382.

3. Inspect rub bar (13) and bracket (4) for grooving, cracks, and breaks. Replace rub bar (13) or bracket (4) if grooved, cracked, or broken. Replace rub bar (13) and bracket (4) if original is the old straight rub bar and bracket.

NOTE

Aluminum roller brackets must be replaced by steel brackets on winch model 7411122.

4. Inspect roller brackets (5) for cracks, breaks, and damaged threads. Replace roller bracket(s) (5) if cracked, broken, or threads are damaged.
5. Inspect roller (15), roller shaft (17) at bearing contact surfaces (18), pin (9), side roller (11), and thrust washers (10) and (16) for cracks, bends, scoring, damaged threads and excessive wear. Refer to table 16-5, Roller Wear Limits, for measurements. Replace part(s) if damaged or worn.
6. Inspect two bearings (14) for wear. Refer to table 16-5, Roller Wear Limits, for measurements. Replace bearing(s) (14) if worn past limits.

16-5. FRONT WINCH ROLLER MAINTENANCE (Contd)

Table 16-5. Roller Wear Limits.

ITEM NO.	ITEM/POINT OF MEASUREMENT	WEAR LIMITS/TOLERANCES	
		INCHES	MILLIMETERS
9	Pin (at bushing surface)	0.994	25.25
10	Thrust washer - thickness – minimum	0.598	15.19
11	Roller bore - inner diameter – maximum	1.2505	31.763
14	Bearing		
	Inner diameter - maximum	1.2500	31,75
	Outer diameter - minimum	2.0620	52.375
15	Roller bore - inner diameter - maximum (at bearing surface)	2.061	52.35
16	Thrust washer - thickness – minimum	0.0615	15.621
17	Shaft - outer diameter - minimum - at bearing surface (18)	1.495	37.97

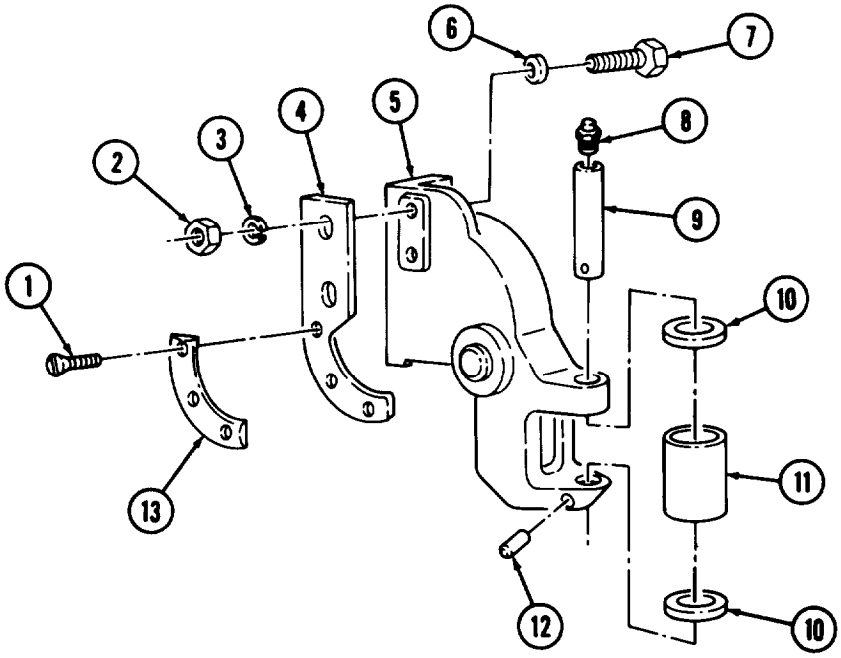

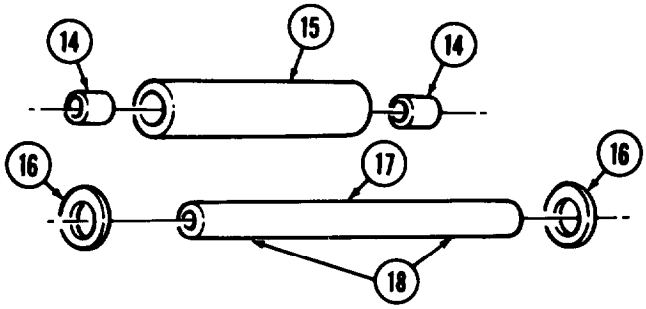

16-5. FRONT WINCH ROLLER MAINTENANCE (Contd)

d. Assembly

NOTE

Right and left side rollers and brackets are assembled the same.
This procedure covers the right side roller and bracket.

1. Position two thrust washers (9) and side roller (10) in right roller bracket (4) and install with pin (8). Ensure drive pin (11) hole alines in both pin (8) and right roller bracket (4).
2. Install drive pin (11) in right roller bracket (4) and pin (8).
3. Install grease fitting (7) on top end of pin (8).

NOTE

Perform steps 4 and 5 for front winch model 7412382.

4. Install rub bar (12) on bracket (3) with three screws (13).
5. Install bracket (3) on right roller bracket (4) with two screws (6), washers (5), new lockwashers (2), and nuts (1).
6. Install bearings (15) in each end of roller (16).
7. Soak two new felt washers (14) in lubricating oil and install in roller (16).
8. Install roller shaft (18) in right roller bracket (4) and aline setscrew holes in roller shaft (18) and right roller bracket (4).
9. Secure roller shaft (18) in right roller bracket (4) with two setscrews (19).
10. Install thrust washer (17) and roller (16) on roller shaft (18).
11. Position thrust washer (22) and left roller bracket (21) on roller shaft (18).
12. Install two grease fittings (20) in ends of roller shaft (18).

16-5. FRONT WINCH ROLLER MAINTENANCE (Contd)

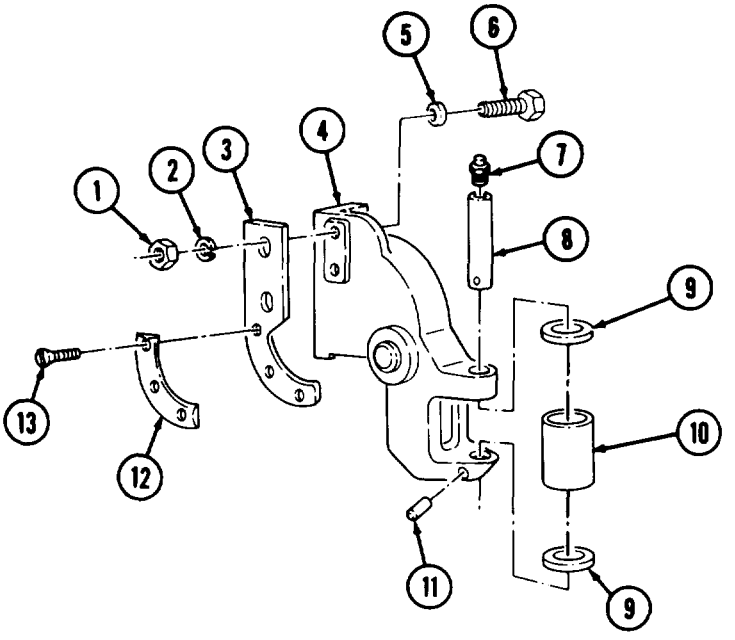

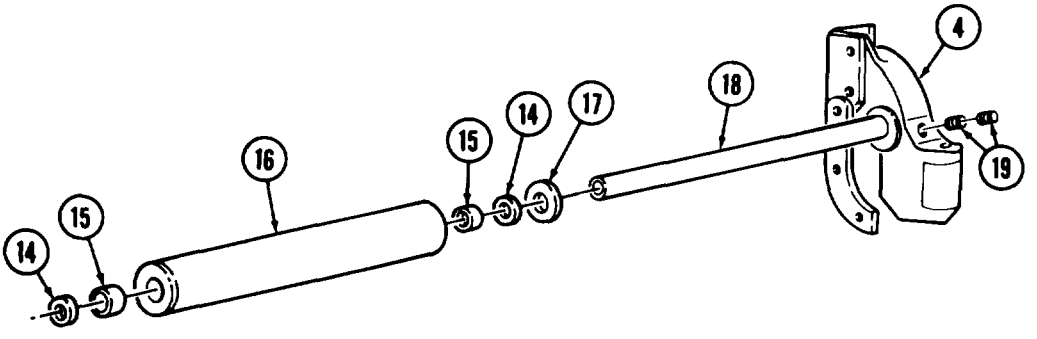

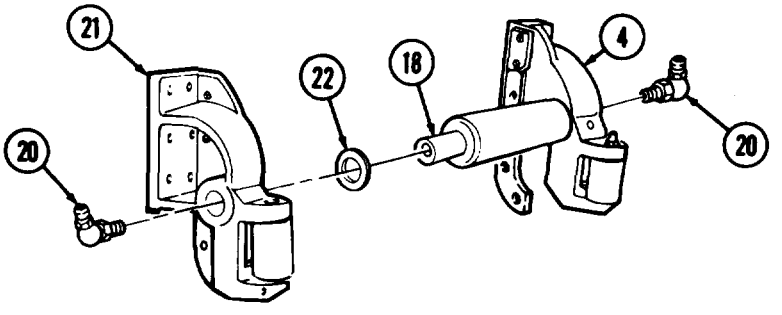

16-5. FRONT WINCH ROLLER MAINTENANCE (Contd)

e. Installation

NOTE

- Assistant will help with step 1.
- Do not tighten screws on front winch model 7411122. Proceed to step 2.

1. Install winch roller (5) on front winch (1) with eight new lockwashers (7), screws (6), four new lockwashers (3), and screws (4).

NOTE

Perform step 2 for front winch model 7411122.

2. Measure distance between machined pads (8). Distance must be 15.50 ± 0.06 in. (39.370 ± 0.152 cm). Move brackets (2) and (9) using slack at screw holes to set correct distance.
3. Tighten eight screws (6) and four screws (4).

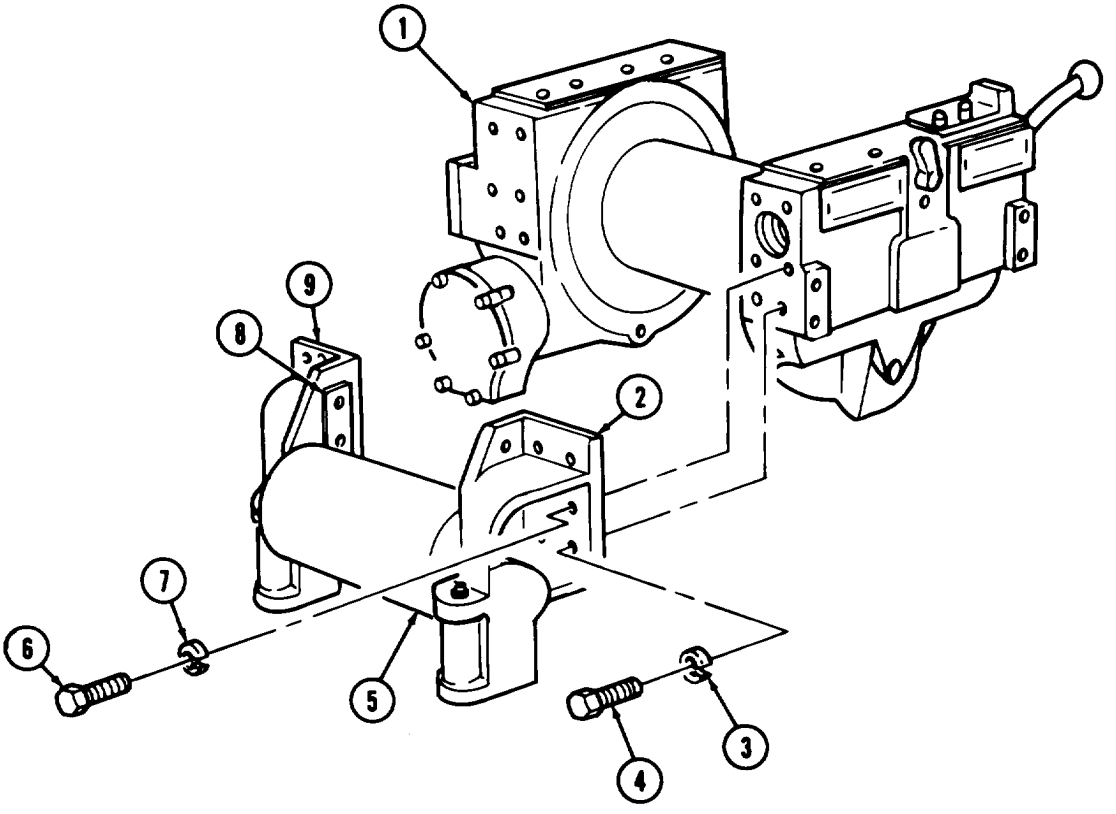

FOLLOW-ON TASKS:
- Lubricate roller (LO 9-2320-260-12).
- Install cable tensioner (if removed) (para 16-4).
- Install winch cable (TM 9-2320-260-20).

16-6. FRONT WINCH DRAG BRAKE REPLACEMENT

THIS TASK COVERS:

a. Removal

b. Installation

INITIAL SETUP

APPLICABLE MODELS

All

TOOLS

General mechanic's tool kit (Appendix B, Item 1)

MATERIALS/PARTS

Four lockwashers (Appendix D, Item 219)
Four lockwashers (Appendix D, Item 218)

REFERENCES (TM)

TM 9-2320-260-20
TM 9-2320-260-34P-2

EQUIPMENT CONDITION

- Front winch removed (TM 9-2320-260-20).
- Level wind removed (if installed) (para. 16-3).
- Roller and cable tensioner removed (if installed) (para. 16-5).
- Roller removed (if installed) (para. 16-5).

a. Removal

NOTE

Perform steps 1 and 2 if front winch is not equipped with level wind mechanism.

1. Remove four screws (2), lockwashers (3), and top channel (1) from end frame (8) and gearcase (4). Discard lockwashers (3).
2. Remove four screws (6), lockwashers (5), and side channel (7) from end frame (8) and gearcase (4). Discard lockwashers (5).

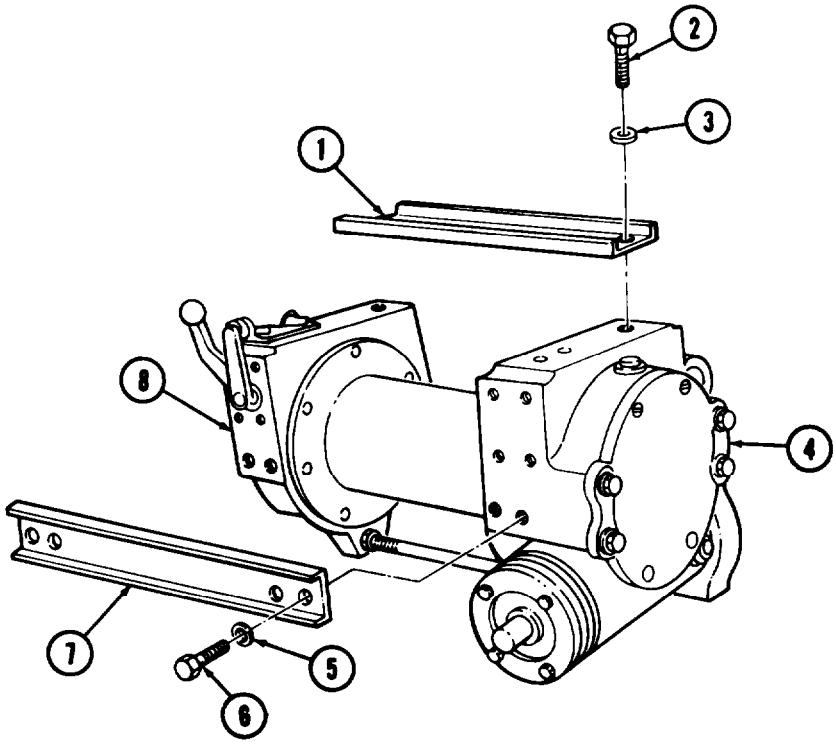

16-6. FRONT WINCH DRAG BRAKE REPLACEMENT (Contd)

3. Remove nut (1) from end of tie rod (2).

NOTE

Place support beneath drum before removing end frame.

4. Remove end frame (8), clutch (4), thrust washer (5), and sleeve (6) from drum (3) and drum shaft (13).
5. Remove adjusting screw (10), drag brake (12), and spring (11) from end frame (8).

b. Installation

1. Install spring (11) and drag brake (12) on end frame (8) with adjusting screw (10).
2. Install clutch (4) on drum shaft (13).
3. Install thrust washer (5) on drum shaft (13) against clutch (4).
4. Install sleeve (6) in end frame (8). Ensure lugs of shift fork (9) engage grooves in sleeve (6).
5. Install end frame (8) onto drum shaft (13) and tie rod (2), and seat toward drum (3).
6. Operate shift handle (7) and ensure clutch (4) engages and disengages drum (3). If not, pull end frame (8) off and repeat steps 2 through 5.
7. Install nut (1) on tie rod (2).

NOTE

Perform steps 8 and 9 if front winch is not equipped with level wind mechanism.

8. Install side channel (20) on end frame (8) and gearcase (17) with four new lockwashers (18) and screws (19).
9. Install top channel (14) on end frame (8) and gearcase (17) with four new lockwashers (16) and screws (15).

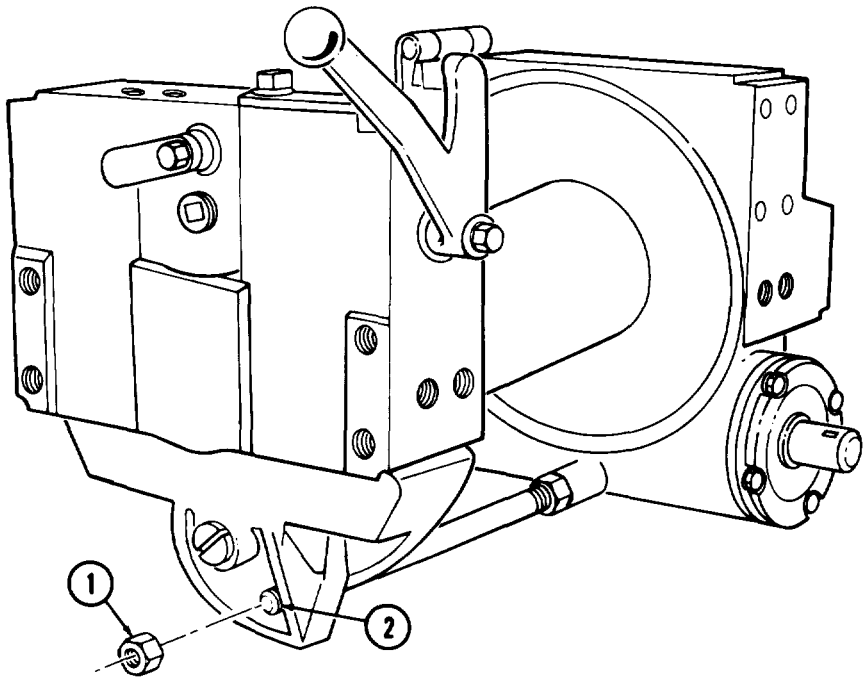

16-6. FRONT WINCH DRAG BRAKE REPLACEMENT (Contd)

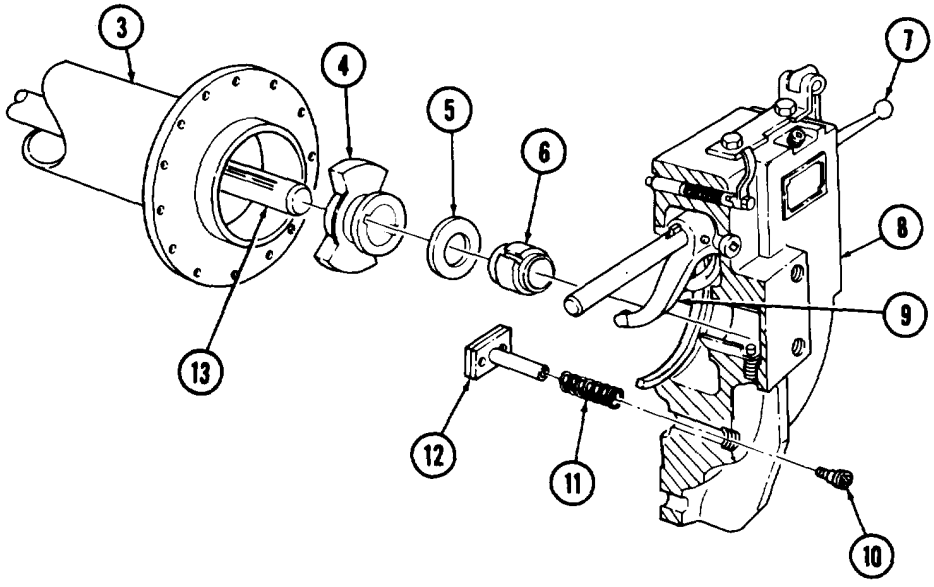

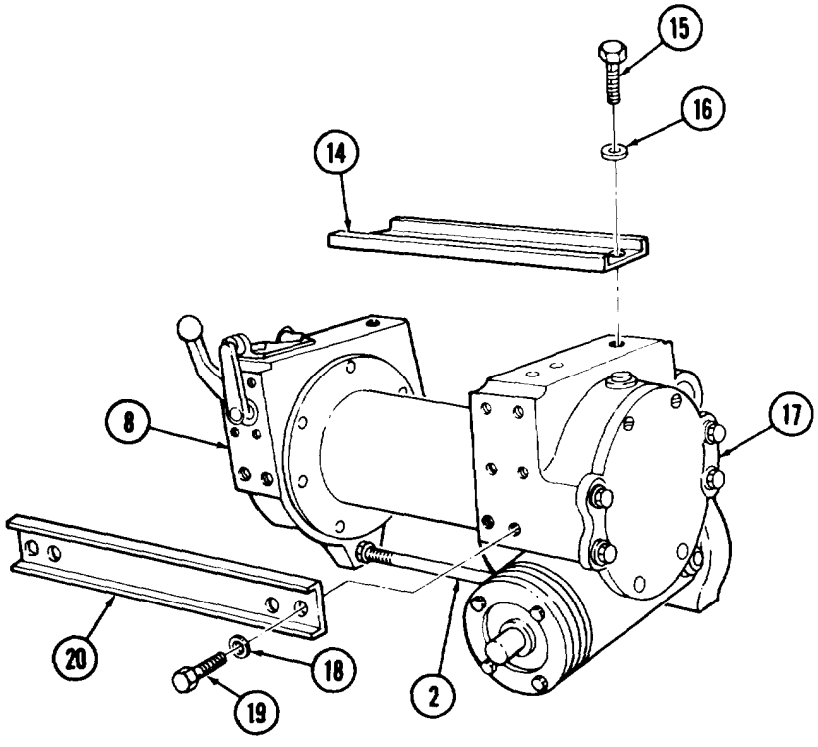

FOLLOW-ON TASKS:
- Install level wind (if removed) (para. 16-3).
- Install roller and cable tensioner (if removed) (para. 16-5).
- Install roller (if removed) (para. 16-5)
- Install winch (TM 9-2320-260-20).
- Adjust drag brake (TM 9-2320-260-20).

Section II. REAR WINCH MAINTENANCE

16-7. REAR WINCH MAINTENANCE INDEX

PARA. NO.	TITLE	PAGE NO.
16-8.	Rear Winch Repair	16-44
16-9.	Rear Winch Level Wind Maintenance	16-58
16-10.	Rear Winch Cable Tensioner Maintenance	16-70
16-11.	Rear Winch Automatic Brake Maintenance	16-74

16-8. REAR WINCH REPAIR

THIS TASK COVERS:

a. Disassembly
b. Cleaning, Inspection, and Repair
c. Assembly

INITIAL SETUP

APPLICABLE MODELS
M816

TOOLS
General mechanic's tool kit (Appendix B, Item 1)
Mechanical puller kit (Appendix B, Item 14)
Spring tester (Appendix B, Item 10)
Inside micrometer (Appendix B, Item 9)
Vernier caliper (Appendix B, Item 33)
Outside micrometer (Appendix B, Item 8)
Soft-head hammer (Appendix B, Item 47)
Arbor press (Appendix B, Item 7)

MATERIALS/PARTS
Four cotter pins (Appendix D, Item 37)
Twenty lockwashers (Appendix D, Item 223)
Six lockwashers (Appendix D, Item 219)
Five lockwashers (Appendix D, Item 218)
Six screw-assembled lockwashers (Appendix D, Item 382)
Two gaskets (Appendix D, Item 100)
Gasket (Appendix D, Item 98)
Gasket (Appendix D, Item 99)

MATERIALS/PARTS (Contd)
Two seals (Appendix D, Item 434)
Seal (Appendix D, Item 433)
Seal (Appendix D, Item 431)
Three woodruff keys (Appendix D, Item 557)
O-ring (Appendix D, Item 293)
GM grease (Appendix C, Item 14)
Gear oil (Appendix C, Item 22)
Rags (Appendix C, Item 32)

PERSONNEL REQUIRED
Two

REFERENCES (TM)
LO 9-2320-260-12
TM 9-2320-260-20
TM 9-2320-260-34P-2

EQUIPMENT CONDITION
- Rear winch removed (TM 9-2320-260-20).
- Rear winch level wind removed (para. 16-9).
- Gear oil drained (LO 9-2320-260-12).

a. Disassembly

1. Remove four cotter pins (8), two pins (7), and lever (5) from right bracket (6). Discard cotter pins (8).
2. Remove two nuts (17), lockwashers (16), and screws (15) from bracket (12) and tensioner (11). Discard lockwashers (16).
3. Remove four screws (13), lockwashers (14), and bracket (12) from winch (1). Discard lockwashers (14).

16-8. REAR WINCH REPAIR (Contd)

4. Remove two nuts (18), lockwashers (19), screws (4), and tensioner (11) from bracket (6). Discard lockwashers (19).
5. Remove four nuts (2), lockwashers (3), screws (9), washers (10), and bracket (6) from winch (1). Discard lockwashers (3).
6. Remove nut (22), lockwasher (23), and screw (25) from channel (24) and winch (1). Discard lockwasher (23).
7. Remove three screws (21), lockwashers (20), and channel (24) from winch (1). Discard lockwashers (20).

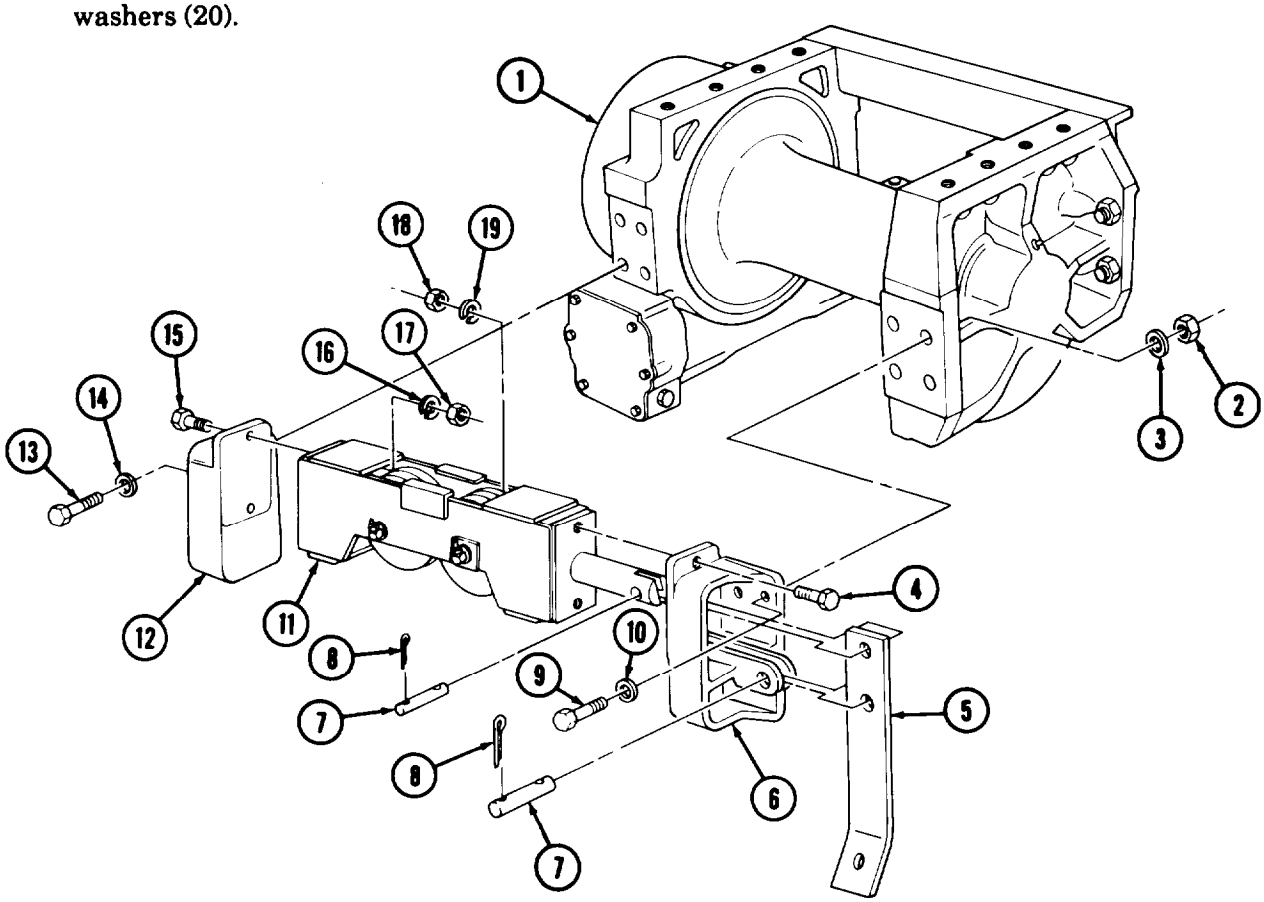

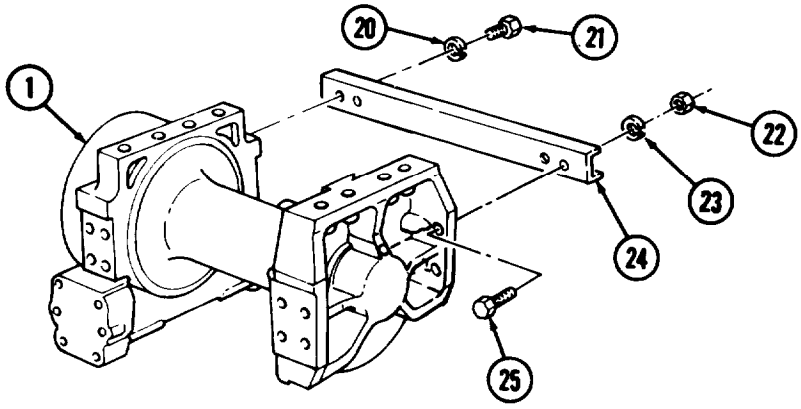

16-8. REAR WINCH REPAIR (Contd)

8. Remove grease fitting (8) from end frame (7).
9. Remove end frame (7) from shaft (3).
10. Remove drum (6) from shaft (3).
11. Remove seal (4) and thrust washer (5) from drum (6). Discard seal (4).
12. Remove two woodruff keys (2) from shaft (3). Discard woodruff keys (2).
13. Remove two screws (14), six screws (15), lockwashers (16), end cover (17), and gasket (13) from gearcase (1). Discard lockwashers (16) and gasket (13).
14. Remove key washer (12) from shaft (3).
15. Remove four screws (9), lockwashers (10), bearing cap (19), and gasket (11) from gearcase (1). Discard lockwashers (10) and gasket (11).
16. Remove seal (18) from bearing cap (19). Discard seal (18).

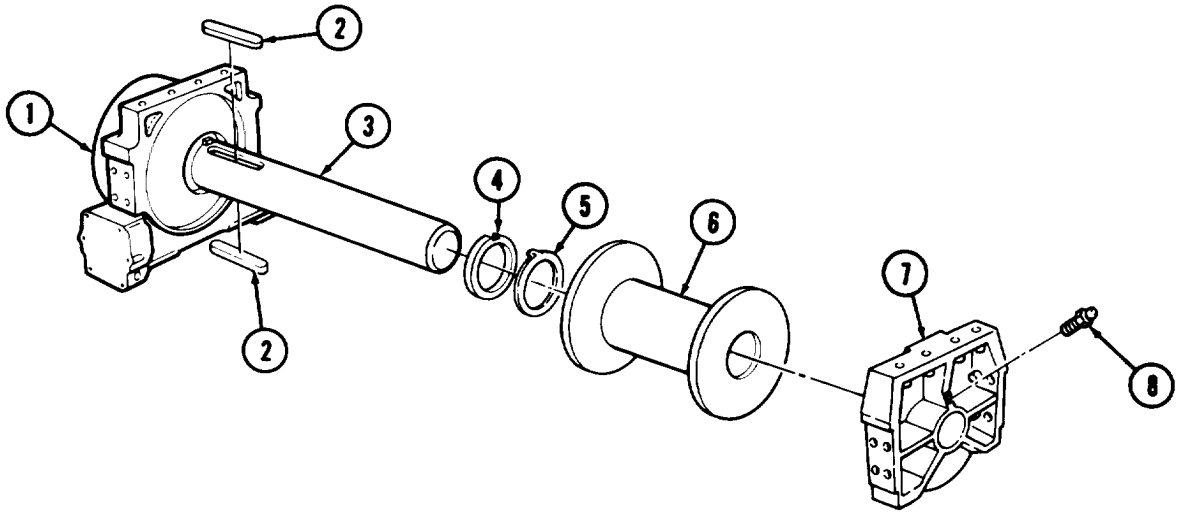

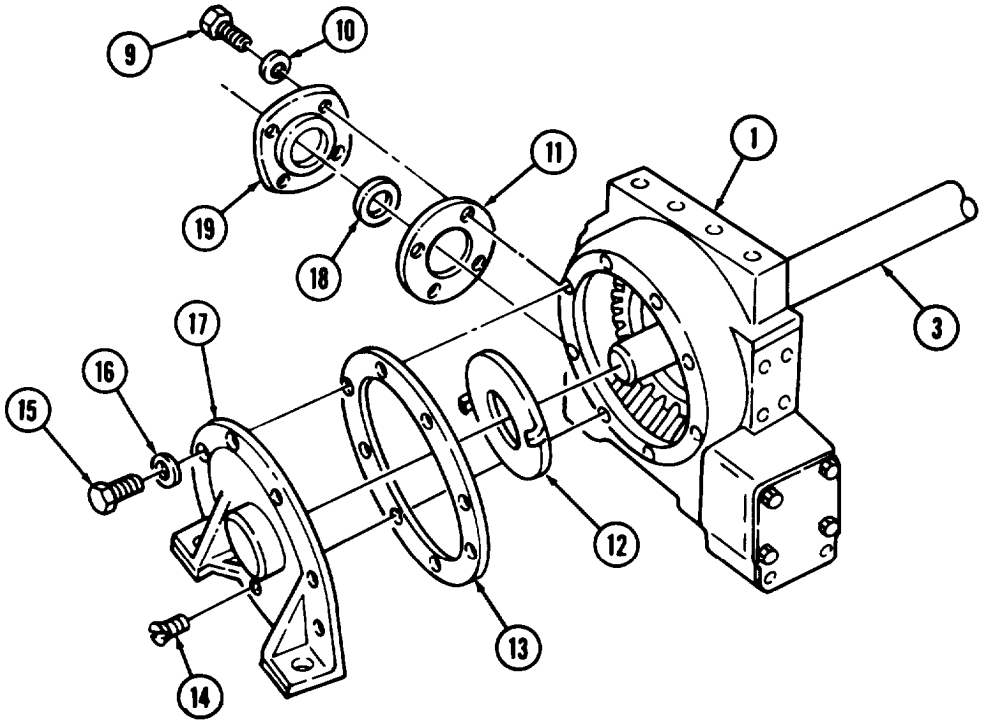

16-8. REAR WINCH REPAIR (Contd)

17. Remove six screw-assembled lockwashers (31), cover (32), and gasket (30) from brake housing (22). Discard gasket (30) and screw-assembled lockwashers (31).
18. Remove adjusting screw (36), washer (35), O-ring (34), and spring (33) from brake housing (22). Discard O-ring (34).
19. Remove brake band (29) from brakedrum (25).
20. Remove screw (28), lockwasher (27), and washer (26) from wormshaft (20). Discard lockwasher (27),
21. Using puller, remove brakedrum (25) from wormshaft (20).
22. Remove woodruff key (38) from wormshaft (20). Discard woodruff key (38).
23. Remove four screws (24), lockwashers (23), brake housing (22), and gasket (21) from gearcase (1). Discard lockwashers (23) and gasket (21).
24. Remove seal (37) from brake housing (22). Discard seal (37).
25. Tap wormshaft (20) with soft-head hammer until front and rear bearings are unseated and worm (41) drops away from worm gear (39).
26. Remove worm gear (39), shaft (3), and thrust washer (40) from gearcase (1).
27. Remove thrust washer (40) from shaft (3).

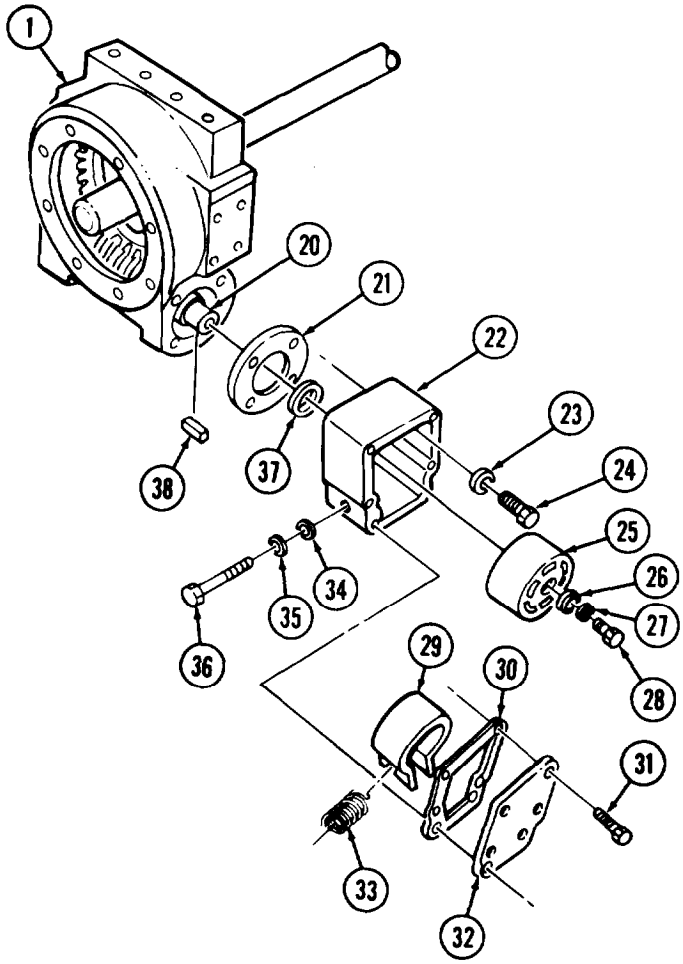

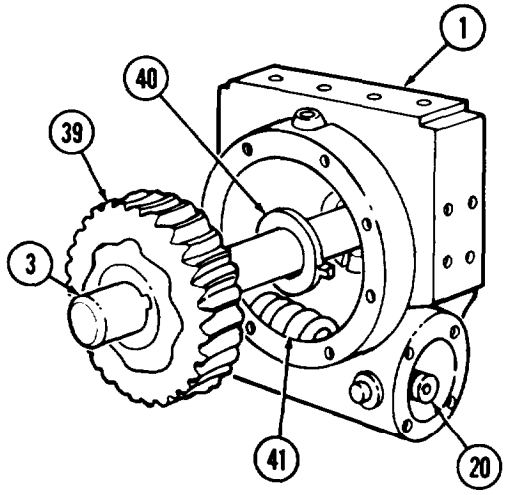

16-8. REAR WINCH REPAIR (Contd)

28. Using puller, remove rear bearing (1) from wormshaft (3).
29. Remove wormshaft (3) with front bearing (4) from gearcase (2).
30. Using puller, remove front bearing (4) from wormshaft (3).
31. Remove seal (5), thrust washer (6), and sleeve (7) from end frame (8). Discard seal (5).

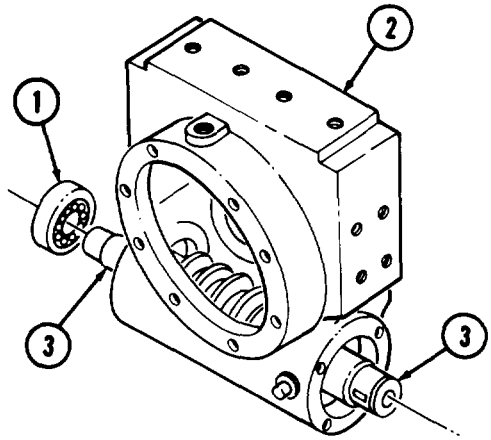

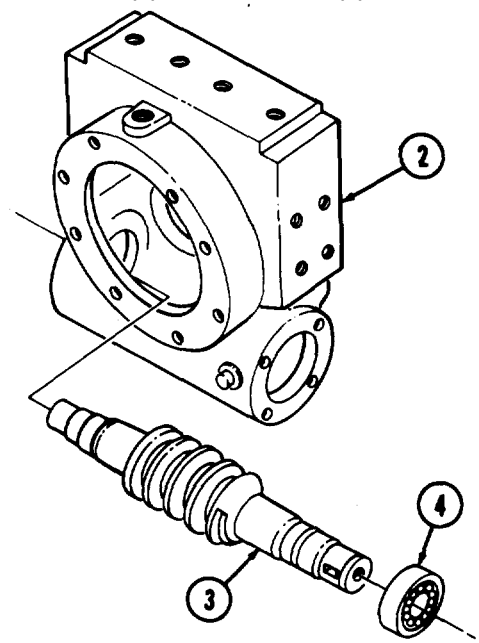

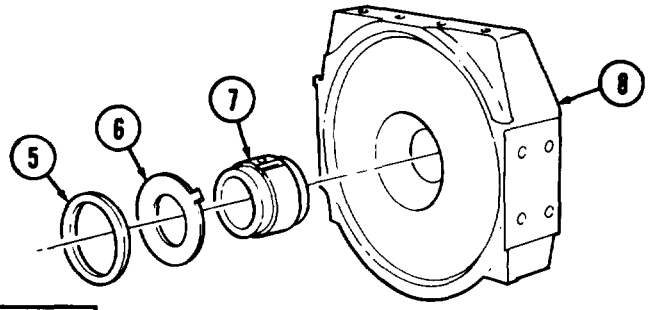

b. Cleaning, Inspection, and Repair

1. For general cleaning instructions, refer to para. 2-8.
2. For general inspection instructions, refer to para. 2-9.
3. For general repair instructions, refer to para. 2-10.
4. Inspect gearcase (2), gearcase bores (10), bushing (9), shaft (11), cover (12), and bushing (13) in cover (12) for nicks, burrs, scores, cracks, breaks, and excessive wear. Refer to table 16-6, Rear Winch Parts Wear Limits, for measurements. Replace or repair part(s) if damaged or worn.

NOTE

- Perform steps 5 and 6 if gearcase bushing fails inspection.
- Perform steps 7 and 8 if cover bushing fails inspection.

5. Using arbor press, remove bushing (9) from gearcase (2). Discard bushing (9).
6. Using arbor press, install new bushing (9) in gearcase (2).

16-8. REAR WINCH REPAIR (Contd)

7. Using arbor press, remove bushing (13) from cover (12). Discard bushing (13).
8. Using arbor press, install new bushing (13) in cover (12).
9. Inspect end frame (8) for cracks, breaks, damaged or missing pin (15), damaged threads, and scoring on seal surface (14). Repair or replace end frame (8) if worn or damaged. Replace pin (15) if missing or damaged.

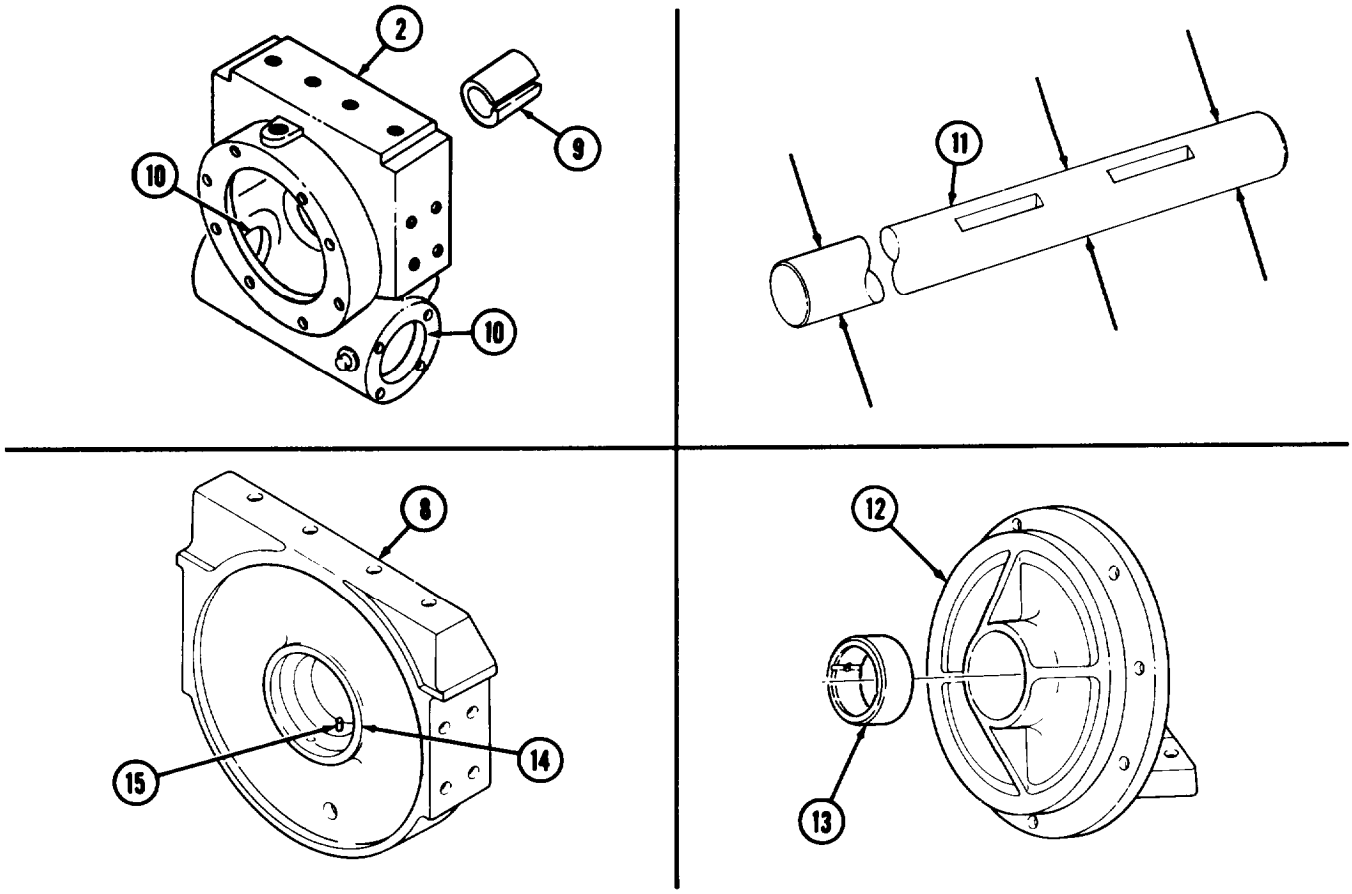

Table16-6. Rear Winch Parts Wear Limits.

ITEM No.	ITEM/POINT OF MEASUREMENT	WEAR LIMITS/TOLERANCES	
		INCHES	MILLIMETERS
2	Gearcase		
9	Bushing - inner diameter - maximum	3.006	76.33
10	Bearing bores - inner diameter - maximum	5.1191	130.025
11	Shaft (3 places) - outer diameter-minimum	2.998	76.15
12	Cover		
13	Bushing - inner diameter - maximum	3.251	82.58

16-8. REAR WINCH REPAIR (Contd)

10. Using spring tester, compress spring (1) and inspect spring (1) for distortions, cracks, and excessive wear. Refer to table 16-7, Rear Winch Parts Wear Limits, for measurements. Replace spring (1) if distorted, cracked, or worn.
11. Inspect brake housing (2) for cracks, burrs, breaks, damaged threads, and loose or leaking freeze plug (3). Repair or replace brake housing (2) if cracked, burred, broken, or threads are damaged. Replace loose or missing freeze plug (3).
12. Inspect worm gear (4) and shaft (5) for breaks, chips, cracks, scores, and loose outer ring (6). Replace worm gear (4) or shaft (5) if damaged (steps 13 and 14).

CAUTION

Ensure worm gear is properly supported when pressing.

NOTE

Perform steps 13 and 14 if worm gear or shaft fails inspection.

13. Using arbor press, remove worm gear (4) from shaft (5). Discard worm gear (4) or shaft (5) if damaged or worn.
14. Using arbor press, install worm gear (4) on shaft (5).
15. Inspect right tensioner (7) and left tensioner (8) frame brackets for cracks and breaks. Repair or replace right tensioner (7) or left tensioner (8) frame brackets if cracked or broken.
16. Inspect sleeve (9), bushing (10), four keyed thrust washers (11), brakedrum (12), brake band (13), and wormshaft (16) for distortions, cracks, burrs, scoring, and excessive wear. Refer to table 16-7, Rear Winch Parts Wear Limits, for measurements. Replace part(s) if damaged or worn.
17. Inspect drum (17), machined surface (20), and bushing (18) for cracks, breaks, scoring, and excessive wear. Refer to table 16-7, Rear Winch Parts Wear Limits, for measurements. Replace part(s) if damaged or worn.

NOTE

Perform steps 18 and 19 if bushing fails inspection.

18. Using arbor press, remove bushing (18) from drum (17). Discard bushing (18).
19. Using arbor press, install new bushing (18) in drum (17).

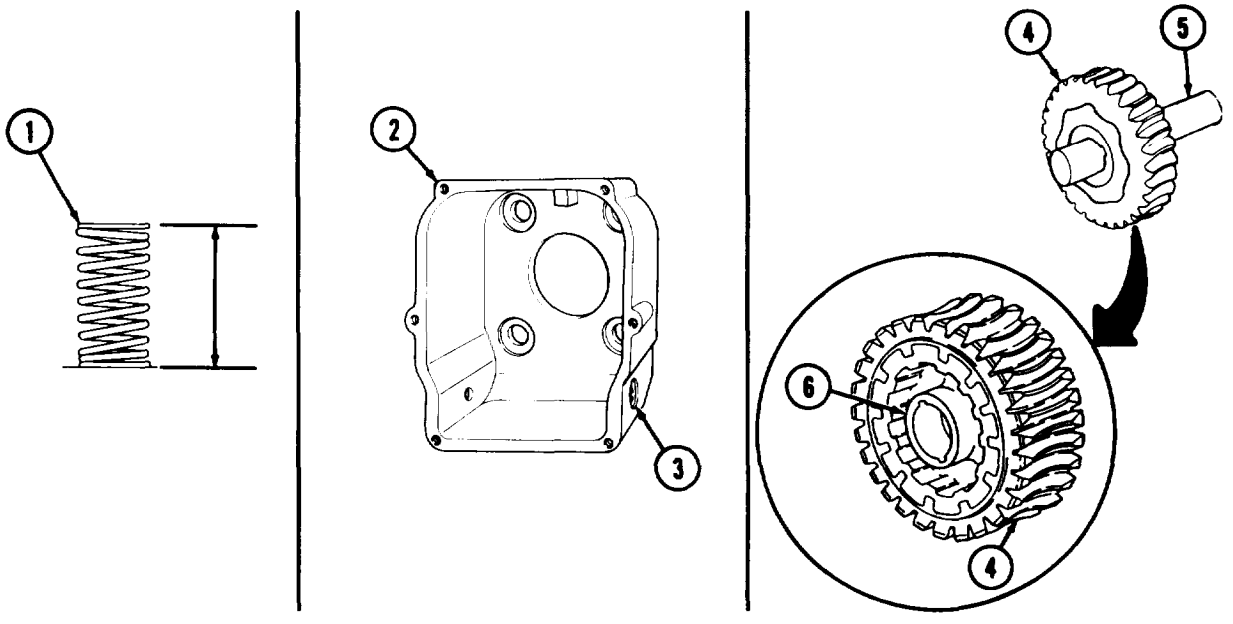

16-8. REAR WINCH REPAIR (Contd)

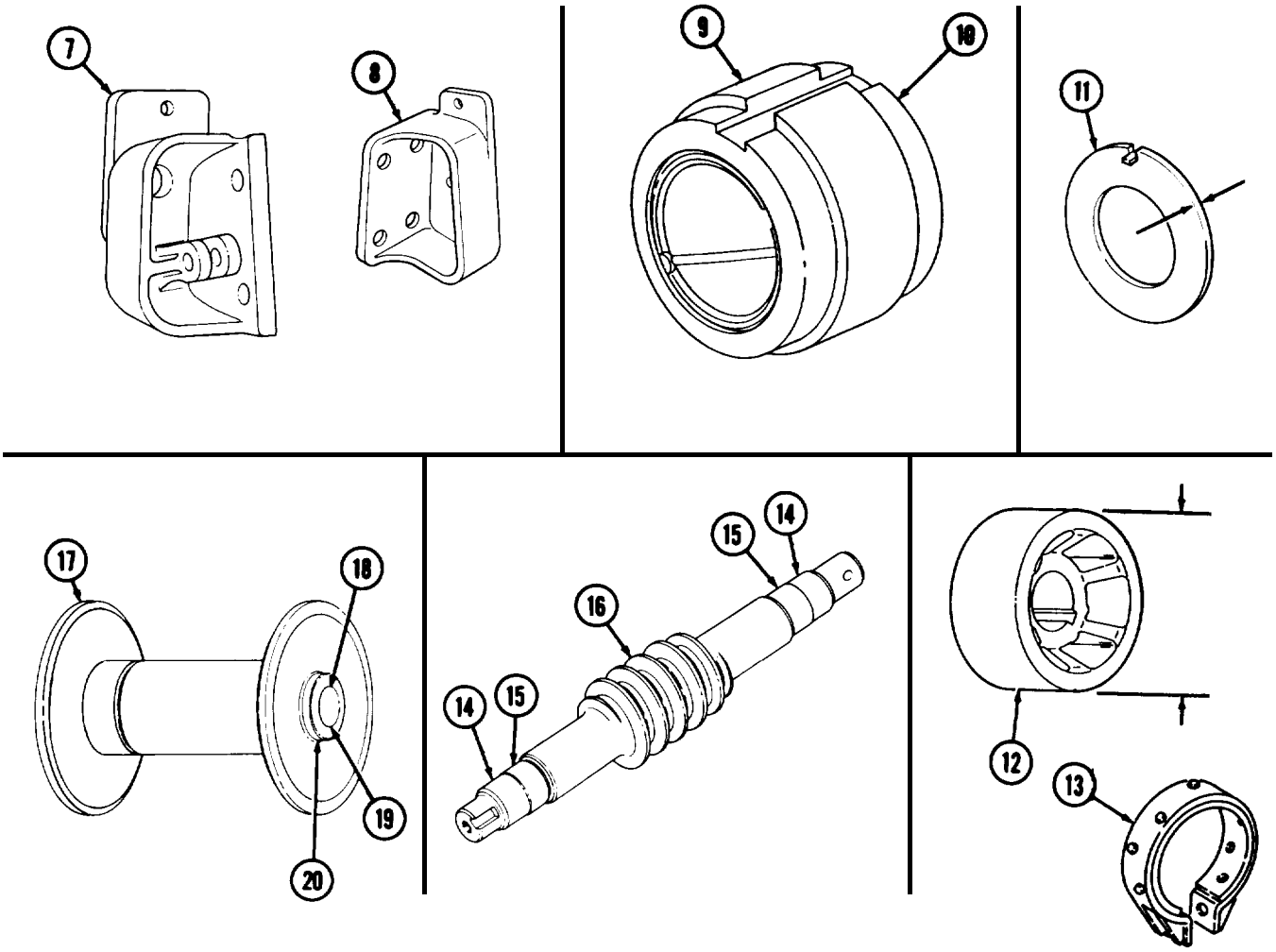

Table 16-7. Rear Winch Parts Wear Limits.

ITEM NO.	ITEM/POINT OF MEASUREMENT	WEAR LIMITS/TOLERANCES	
		INCHES	MILLIMETERS
1	Spring - length (compressed to 97 lb-ft *(131.5* N•m))	2.0	50.8
9	Sleeve		
10	Bushing – inner diameter - maximum	3.005	76.33
11	Keyed thrust washers – thickness – minimum	0.0615	1.562
12	Brakedrum – outer diameter - minimum	5.497	139.62
13	Brake band - minimum thickness to rivet head	0.070	1.78
16	Wormshaft		
14	Seal surface - outer diameter – minimum	2.124	53.95
15	Bearing surface - outer diameter – minimum	2.3615	59.982
17	Drum		
18	Bushing - inner diameter – maximum	3.005	76.33
19	Bushing bore - inner diameter – maximum	3.251	82,58
20	Machined seal surface – minimum	4.999	126.97

16-8. REAR WINCH REPAIR (Contd)

c. Assembly

NOTE

Apply light film of gear oil to all parts during assembly. Do not lubricate brake band or brakedrum.

1. Place wormshaft (6) in gearcase (4) with round shear pin hole to right.
2. Apply light coat of GAA grease to thrust washer (2) and place over long end of shaft (7) with key of thrust washer (2) away from worm gear (8).
3. Place long end of shaft (7) through bushing (3) in gearcase (4) and slide shaft (7) and worm gear (8) into gearcase (4).
4. Aline key of thrust washer (2) with notch (5) in gearcase (4) and seat thrust washer (2) and worm gear (8) in gearcase (4).
5. Place gearcase (4) on its side and move wormshaft (6) so that wormshaft end (12) is up and through bore (10). Using arbor press, install bearing (11) over wormshaft end (12) and seat against shoulder of wormshaft (6).
6. Aline wormshaft (6) and worm gear (8) and press bearing (11) into bore (10) of gearcase (4).
7. Turn gearcase (4) over so that wormshaft end (14) is up through bore (13). Using arbor press, install bearing (9) over wormshaft end (14) and into bore (13) and seat against shoulder of worm shaft (6).
8. Apply light coat of GAA grease to thrust washer (1) and place thrust washer (1) over short end of shaft (7) with key pointing away from worm gear (8).
9. Position cover (17) over shaft (7) and aline key of thrust washer (1) with notch in cover (17). Push cover (17) all the way on shaft (7).
10. Measure gap between cover (17) and gearcase (4) mating surface. Gap should be 0.005-0.015 in. (0.13-0.38 mm).
    a. If gap is less than 0.005 in. (0. 13 mm), remove worm gear (8) and shaft (7) from gearcase (4). Press worm gear (8) further on shaft (7).
    b. If gap is greater than 0.015 in. (0.38 mm), remove worm gear (8) and shaft (7) from gearcase (4). Press worm gear (8) toward short end of shaft (7).

NOTE

Use one gasket for each 0.005 in. (O. 13 mm) of gap measured in step 10.

11. Place new gaskets (18) and cover (17) over shaft (7), checking that key of thrust washer (1) and notch in cover (17) are alined, and install on gearcase (4) with two screws (19), six new lockwashers (16), and screws (15).

16-8. REAR WINCH REPAIR (Contd)

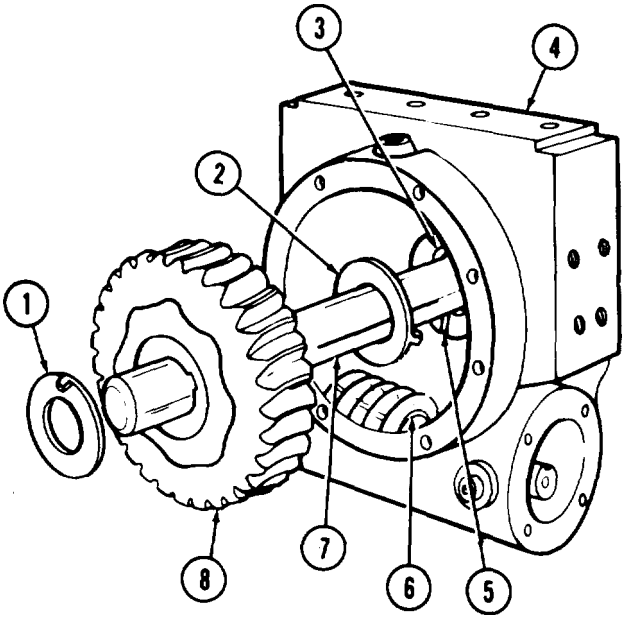

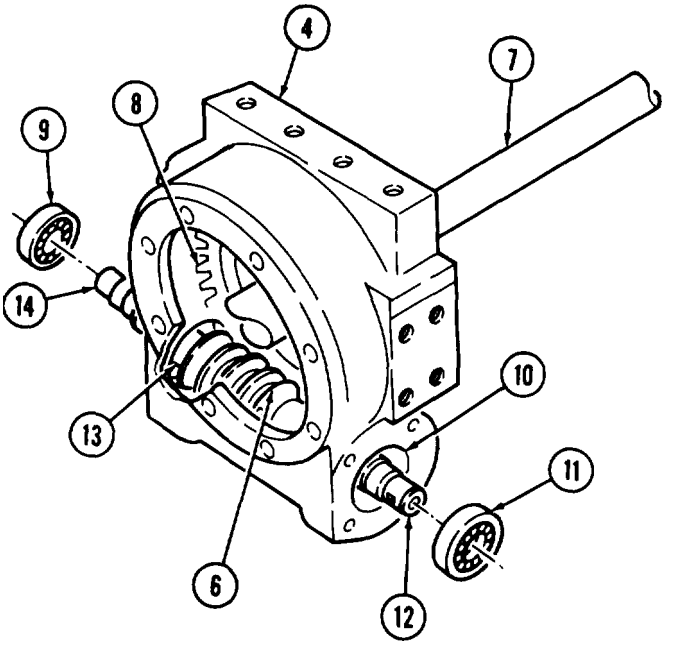

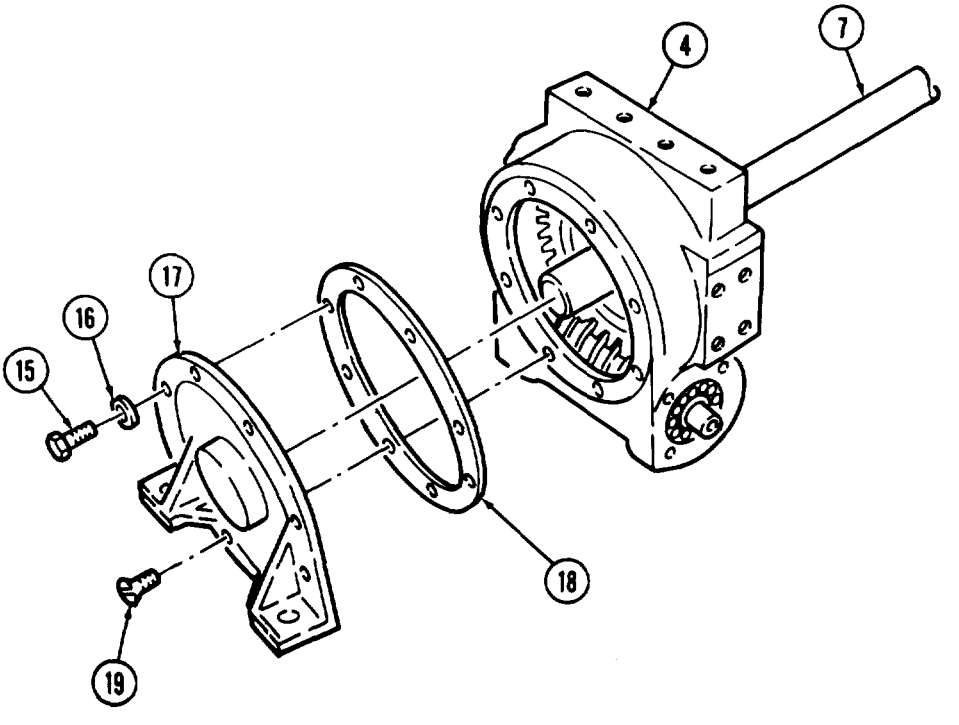

16-8. REAR WINCH REPAIR (Contd)

12. Install new seal (15) on brake housing (8).
13. Install new gasket (7) and brake housing (8) on gearcase (5) with four new lockwashers (9) and screws (10).
14. Install new woodruff key (16) on wormshaft (6).
15. Install brakedrum (14) on wormshaft (6) with washer (11), new lockwasher (13), and screw (12).
16. Install new seal (18) on bearing cap (3).
17. Position two new gaskets (4) and bearing cap (3) over wormshaft end (17) and install on gearcase (5) with four new lockwashers (2) and screws (1).
18. Position dial indicator on gearcase (5) to read wormshaft (6) end play. Normal end play is 0.005-0.015 in. (0.13-0.38 mm). If end play is less than normal, go to step a. If end play is more than normal, go to step b. Remove dial indicator when end play is correct.

    a. To increase end play:

    (1) Remove four screws (1), lockwashers (2), and bearing cap (3) from gearcase (5).

    (2) Add one or more additional gaskets (4).

    (3) Install additional gaskets (4) and bearing cap (3) on gearcase (5) with four lockwashers (2) and screws (1).

    (4) Recheck end play.

    b. To decrease end play:

    (1) Remove four screws (1), lockwashers (2), and bearing cap (3) from gearcase (5).

    (2) Remove one or more gaskets (4).

    (3) Install remaining gaskets (4) and bearing cap (3) on gearcase (5) with four lockwashers (2) and screws (1).

    (4) Recheck end play.
19. Position brake band (19) and spring (23) on brakedrum (14) and brake housing (8).
20. Install new O-ring (24), washer (25), and adjusting screw (26) on brake housing (14). Adjusting screw (26) threads into captive nut (27).
21. Tighten adjustment screw (26) until spring length (28) is 2.125-2.187 in. (53.98-55.55 mm).
22. Install new gasket (20) and cover (21) on housing (8) with six new screw-assembled lock-washers (22).
23. Install new seal (29) in seal groove (32) of end frame (31).
24. Place sleeve (30) in end frame (31) with slot (34) over pin (33).

16-8. REAR WINCH REPAIR (Contd)

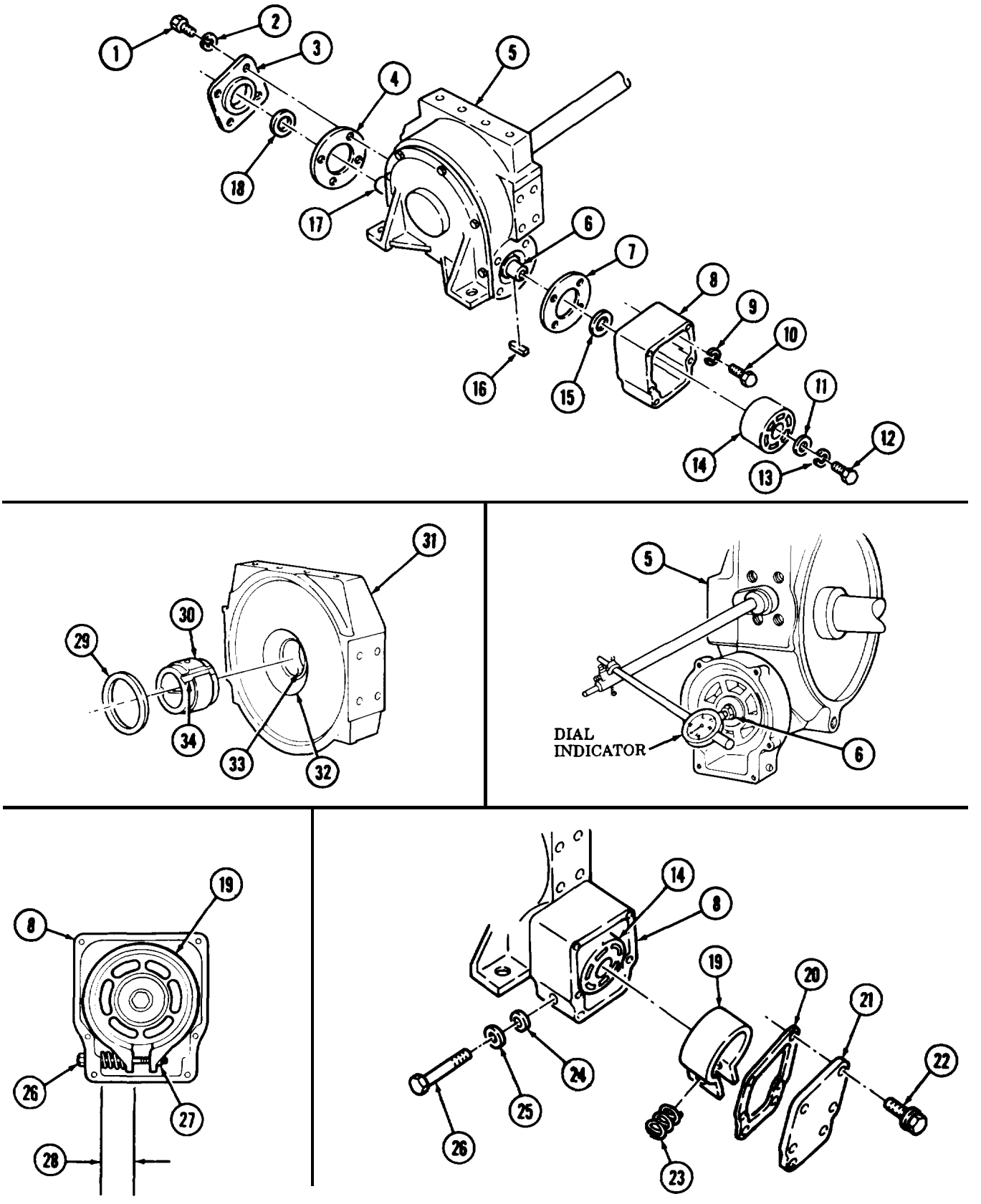

16-8. REAR WINCH REPAIR (Contd)

25. Place thrust washer (5) over shaft (4) against gearcase (1). Ensure thrust washer (5) key engages key in thrust washer (2).

26. Install two new keys (3) in shaft (4).

27. Install new seal (6) in gearcase end of drum (7).

28. Place drum (7) on shaft (4) and aline keyways in drum (7) to keys (3) in shaft (4). Position drum (7) against thrust washer (5) and gearcase (1).

29. Position thrust washer (8) over shaft (4) against drum (7) with key of thrust washer (8) facing away from drum (7).

30. Aline end of shaft (4) to sleeve and bushing (10) and place end frame (9) on shaft (4) against drum (7). Ensure key of thrust washer (8) engages notch in end frame (9).

31. Install channel (11) on gearcase (1) and end frame (9) with three new lockwashers (12), three screws (13), screw (16), new lockwasher (15), and nut (14).

32. Install grease fitting (17) in end frame (9).

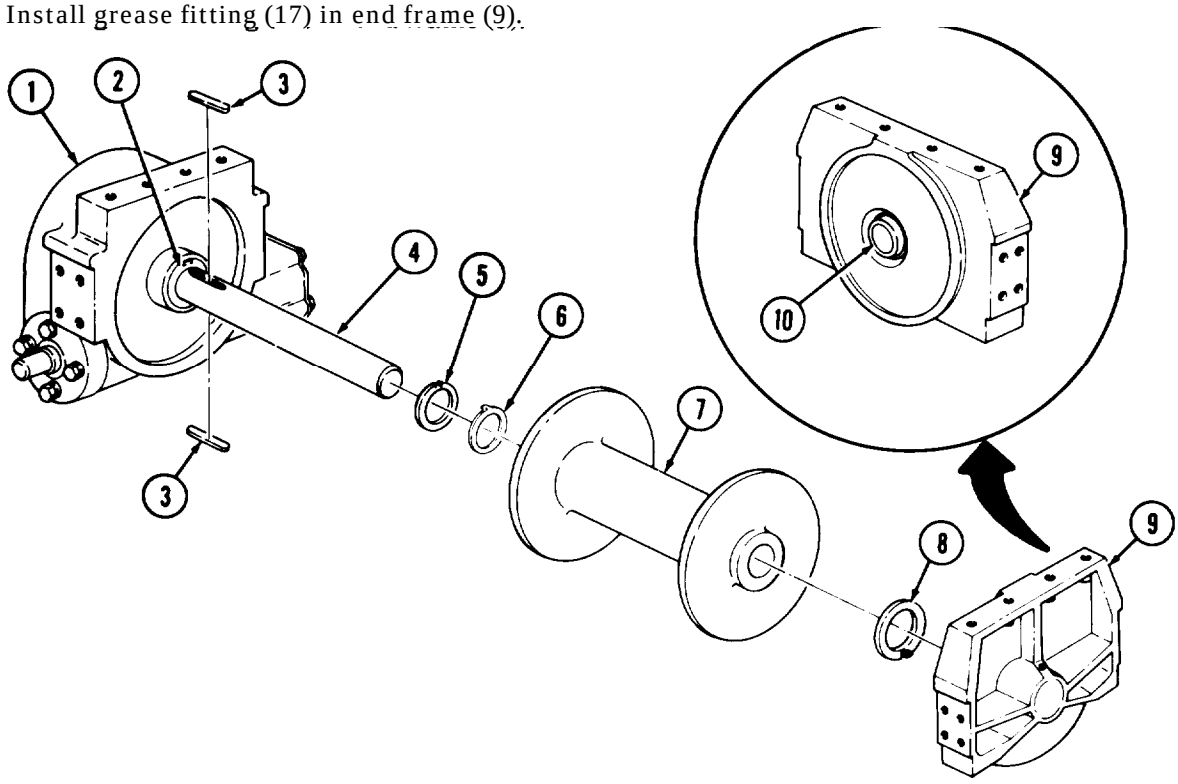

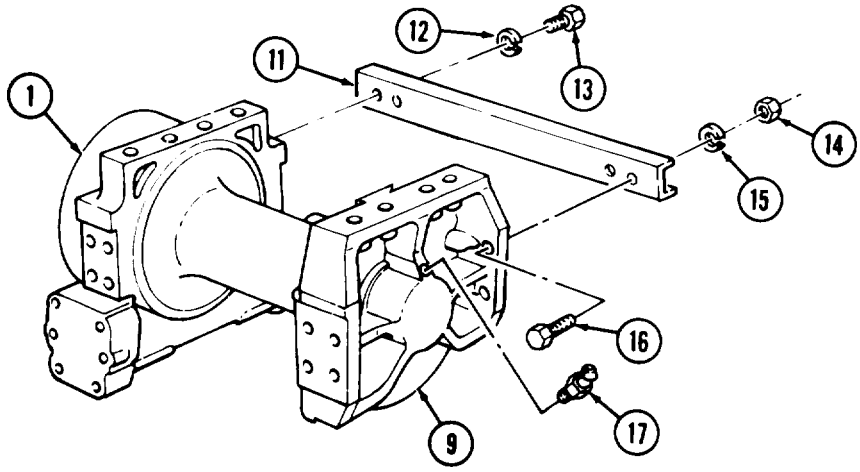

16-8. REAR WINCH REPAIR (Contd)

33. Install bracket (29) on end frame (9) with four washers (34), screws (33), new lockwashers (26), and nuts (25).
34. Aline frame bar (35) with hole in bracket (29) and position tensioner (36) end plate against bracket (29). Install tensioner (36) on bracket (29) with two screws (27), new lockwashers (24), and nuts (23).
35. Install bracket (37) on gearcase (1) and tensioner (36) with four new lockwashers (19), screws (18), two screws (20), new lockwashers (21), and nuts (22).
36. Install lever (28) on bracket (29) with pin (30) and two new cotter Pins (31).
37. Aline hole in lever (28) with hole in slot on frame bar (35) and install pin (32) in frame bar (35) and lever (28) with two new cotter pins (31).

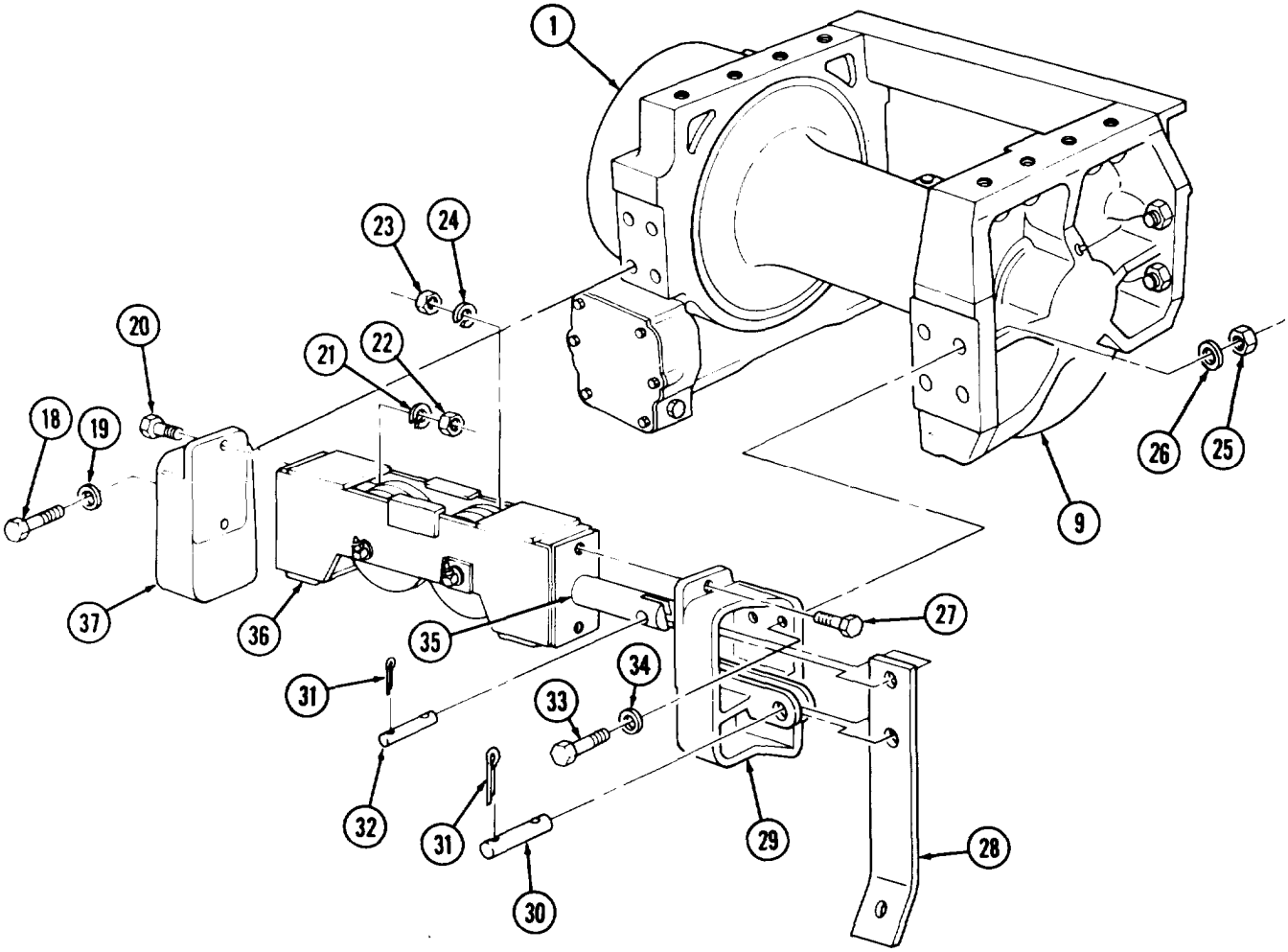

FOLLOW-ON TASKS: • Install rear winch level wind (para. 16-9)
Ž Install rear winch (TM 9-2320-260-20).
• Lubricate winch (LO 9-2320-260-12).

16-9. REAR WINCH LEVEL WIND MAINTENANCE

THIS TASK COVERS:

a. Removal
b. Disassembly
c. Cleaning and Inspection
d. Assembly
e. Installation

INITIAL SETUP

APPLICABLE MODELS
M816

TOOLS
General mechanic's tool kit (Appendix B, Item 1)
Outside micrometer (Appendix B, Item 8)
Inside micrometer (Appendix B, Item 9)
Arbor press (Appendix B, Item 7)

MATERIALS/PARTS
Four lockwashers (Appendix D, Item 219)
Four lockwashers (Appendix D, Item 215)
Eight felt washers (Appendix D, Item 534)

MATERIALS/PARTS (contd)
Felt washer (Appendix D, Item 533)
Locknut (Appendix D, Item 183)
Locknut (Appendix D, Item 180)
Felt seal (Appendix D, Item 478)
GAA grease (Appendix C, Item 14)
Lubricating oil (Appendix C, Item 21)

REFERENCES (TM)
TM 9-2320-260-20
TM 9-2320-260-34P-2

EQUIPMENT CONDITION
Rear winch cable removed (TM 9-2320-260-20).

a. Removal

Remove four screws (2), lockwashers (3), and level wind (1) from rear winch (4). Discard lockwashers (3).

b. Disassembly

NOTE

Record positions of retainer screws and stop screws for installation.

1. Loosen four jamnuts (6) and remove four retainer screws (7) and jamnuts (6) from trolley (5).
2. Remove trolley (5) from track frame (9).
3. Loosen two jamnuts (8) and remove two stopscrews (16) and jamnuts (8) from track frame (9).
4. Remove two nuts (11) and latch (12) from poppet nut (13).
5. Remove poppet nut (13), spring (14), and poppet (15) from threaded bore (10) on track frame (9).

16-9. REAR WINCH LEVEL WIND MAINTENANCE (Contd)

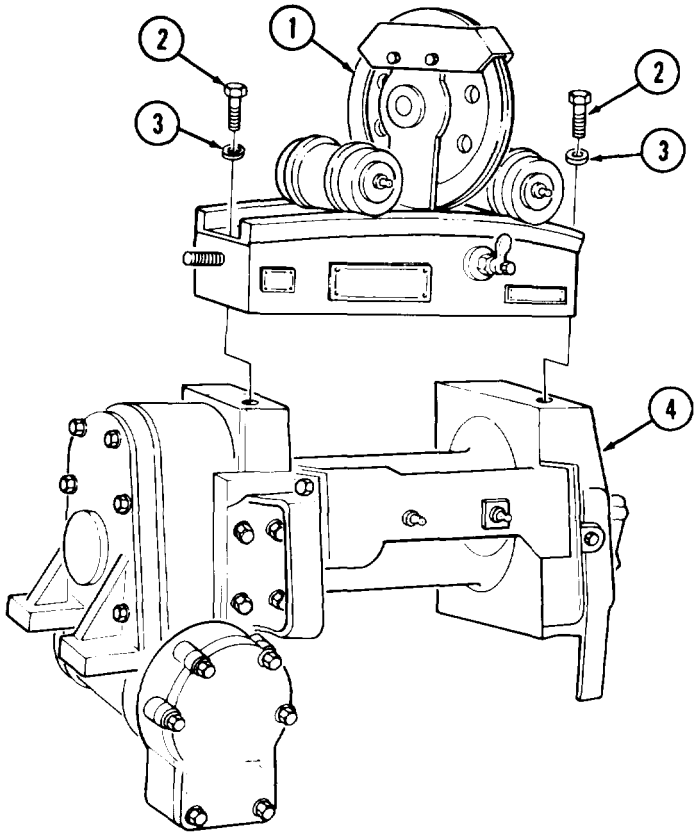

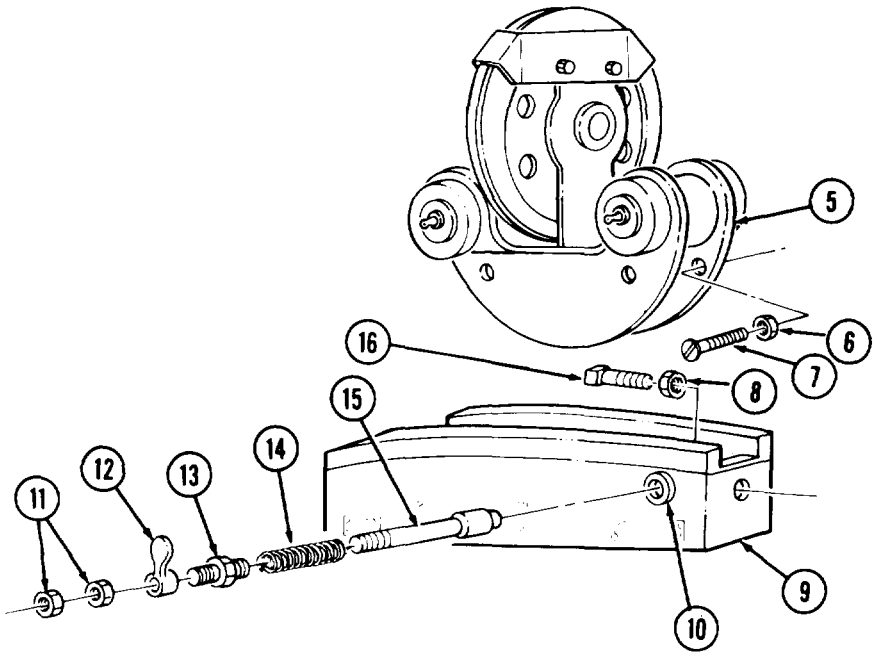

16-9. REAR WINCH LEVEL WIND MAINTENANCE (Contd)

6. Remove grease fitting (15) and locknut (14) from pivot shaft (2). Discard locknut (14).
7. Remove pivot frame (1) and pivot shaft (2) from trolley frame (16).
8. Remove upper race (3), forty-five ball bearings (18), and lower race *(4)* from trolley frame (16).

NOTE

Wheel sets of both axles are disassembled the same. Left axle wheel set is shown.

9. Remove two grease fittings (8) from ends of axle (17).
10. Remove two snaprings (7), washers (6), outer felt washers (5), wheels (9), inner felt washers (11), and thrust washers (12) from axle (17). Discard felt washers (5) and (11).
11. Using arbor press, remove two bearings (10) from wheels (9).
12. Remove two grease fittings (13) from trolley frame (16).

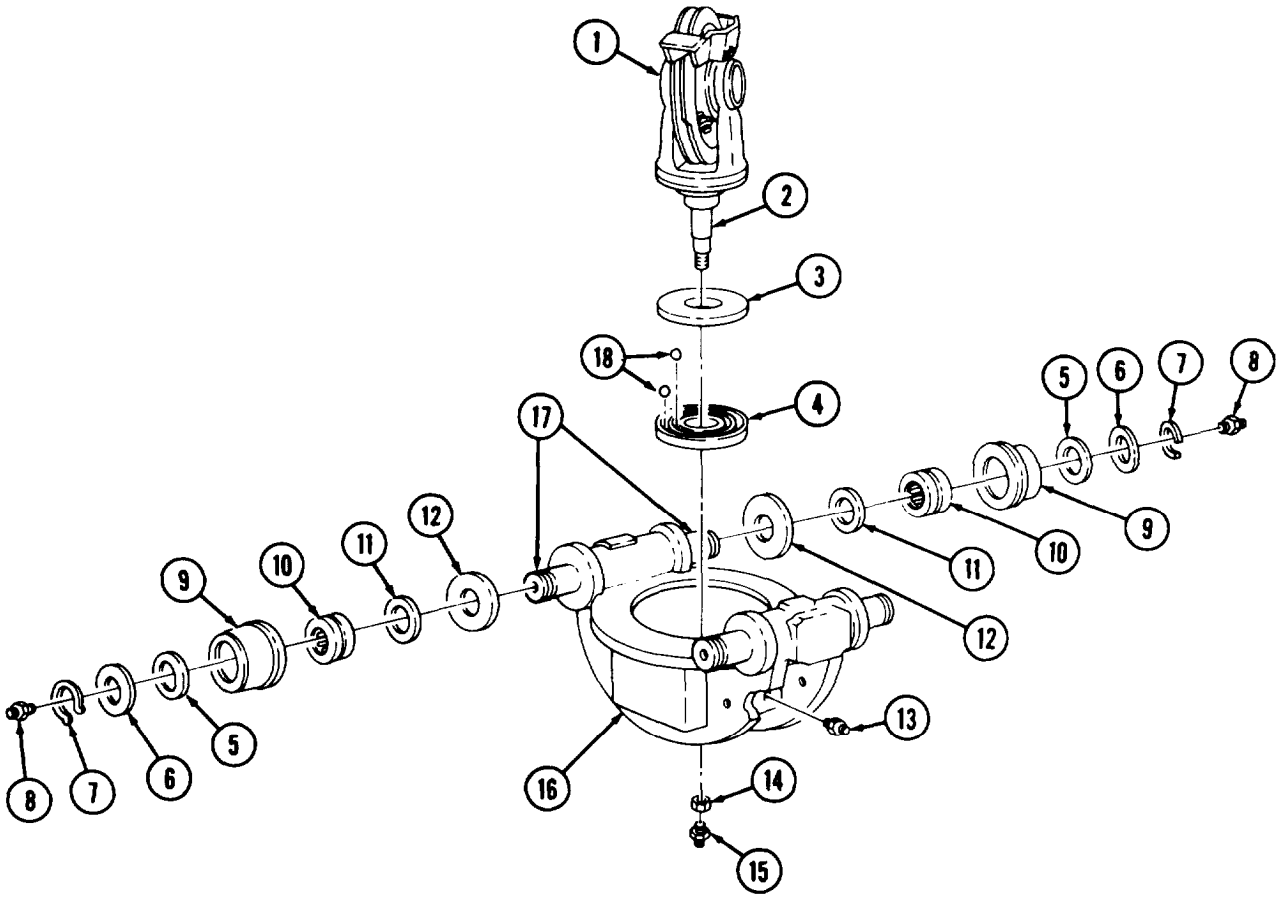

16-9. REAR WINCH LEVEL WIND MAINTENANCE (Contd)

13. Remove four screws (26), lockwashers (25), and cable guard (24) from pivot frame (11). Discard lockwashers (25).
14. Remove two snaprings (28), shaft (29), two thrust washers (19), and sheave (21) from pivot frame (1).
15. Remove pin (27) from shaft (29).
16. Remove two spacers (20), bearing (22), race (23), and grease fitting (35) from sheave (21).
17. Remove locknut (34), washer (33), felt washer (32), and felt seal (30) from end of pivot shaft (2). Discard locknut (34), felt washer (32) and felt seal (30).
18. Using arbor press, remove pivot shaft (2) and bearing (31) from pivot frame (1).

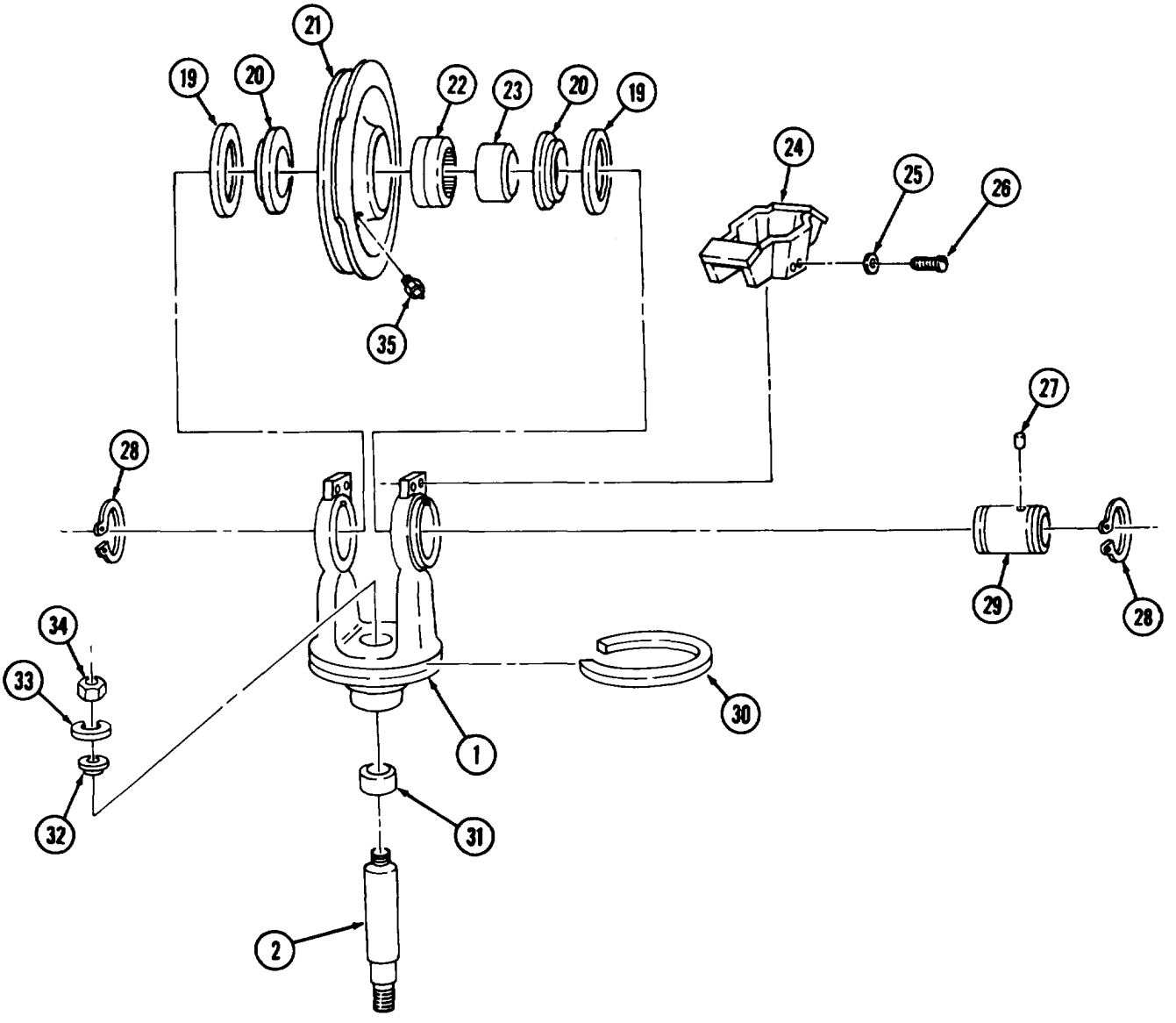

16-9. REAR WINCH LEVEL WIND MAINTENANCE (Contd)

c. Cleaning and Inspection

1. For general cleaning instructions, refer to para. 2-8.
2. For general inspection instructions, refer to para. 2-9.
3. Inspect pivot frame (1), bearing (5), shaft (7), two thrust washers (8), spacers (9), and sheave (10) for nicks, burrs, scoring, cracks, breaks, looseness, and excessive wear. Refer to table 16-8, Rear Winch Level Wind Wear Limits, for measurements. Replace part(s) if damaged or worn.
4. Inspect race (12) and bearing (11) for nicks, burrs, scoring, cracks, and breaks. Replace race (12) and bearing (11) if damaged.
5. Inspect pin (6) for nicks, burrs, scoring, cracks, and breaks. Replace pin (6) if damaged.

Table 16-8. Rear Winch Level Wind Wear Limits.

ITEM NO.	ITEM/POINT OF MEASUREMENT	WEAR LIMITS/TOLERANCES	
		INCHES	MILLIMETERS
1	Pivot frame		
2	Sheave shaft bore (2 places) – inner diameter – maximum	2.747	69.77
3	Race surface – outer diameter - minimum	2.812	71.42
5	Bearing bore – inner diameter – maximum	1.3747	34.917
4	Pivot frame bearing – outer diameter – minimum	1.3745	34.912
7	Sheave shaft – outer diameter – minimum	2.7490	69.825
8	Sheave thrust washer – thickness – minimum	0.0615	1.562
9	Spacer		
	Edge – thickness – minimum	0.087	2.21
	Body – thickness – minimum	0.178	4.52
10	Sheave		
	Bearing bore – inner diameter – maximum	4.2496	107.940
	Hub – width – minimum length	2.235	56.77
11	Sheave bearing – outer diameter - minimum	4.2492	107.930

16-9. REAR WINCH LEVEL WIND MAINTENANCE (Contd)

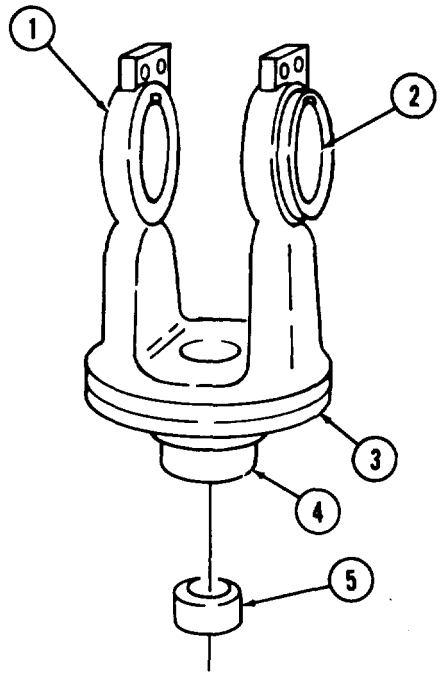

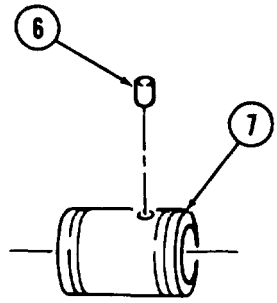

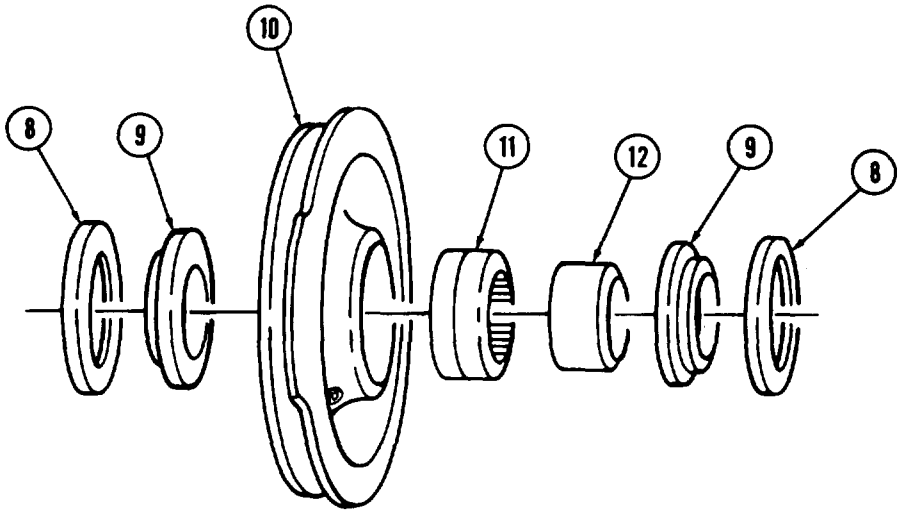

16-9. REAR WINCH LEVEL WIND MAINTENANCE (Contd)

6. Inspect four thrust washers (1), two axles (2), forty-five ball bearings (8), and four trolley wheels (13) for breaks, cracks, scoring, corrosion, chips, damaged threads, flat spots, and excessive wear. Refer to table 16-9, Rear Winch Level Wind Wear Limits, for measurements. Replace part(s) if damaged or worn.
7. Inspect pivot shaft (3), trolley frame (6), track frame (7), latch (9), and two races (12) for breaks, cracks, scoring, corrosion, chips, and flat spots. Refer to table 16-9, Rear Winch Level Wind Limits, for measurements. Replace part(s) if damaged.

NOTE

- Perform steps 8 and 9 if trolley axle fails inspection.
- Both axles are removed and installed the same. This procedure covers one axle.

8. Using arbor press, remove axle (2) from trolley frame (6). Discard axle (2).
9. Using arbor press, install new axle (2) on trolley frame (6).

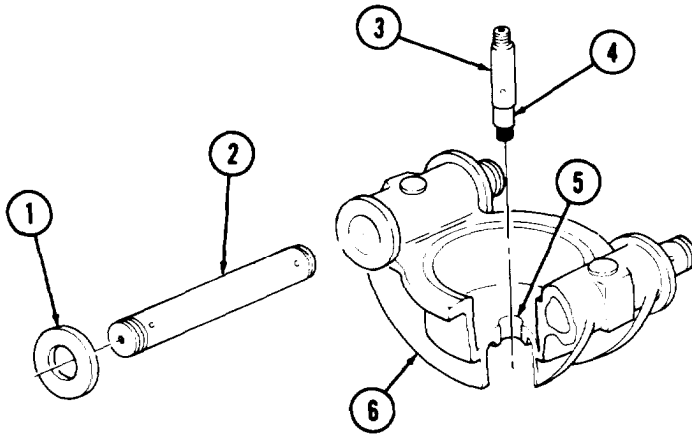

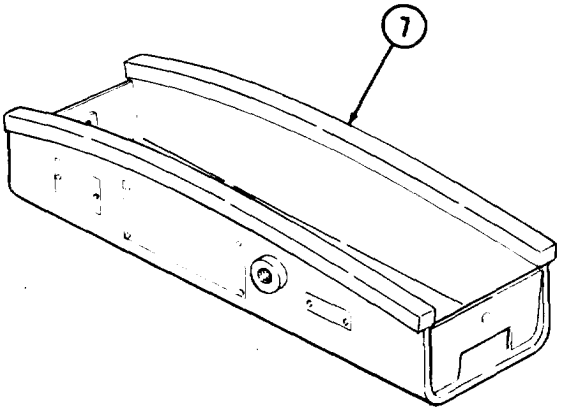

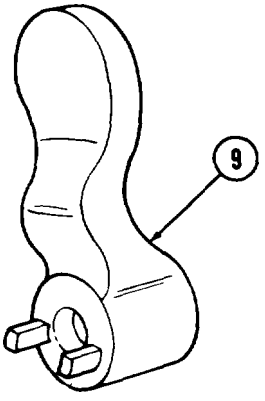

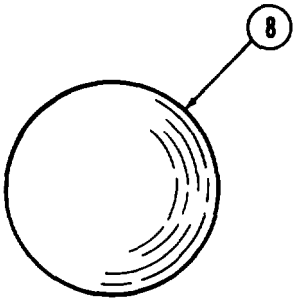

16-9. REAR WINCH LEVEL WIND MAINTENANCE (Contd)

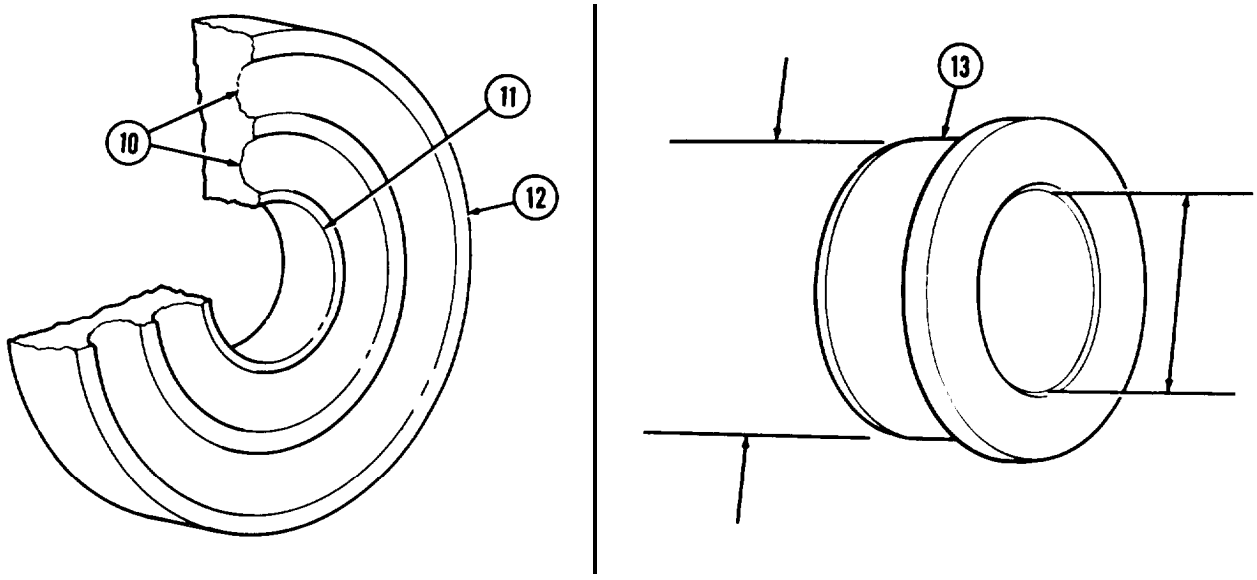

Table 16-9. Rear Winch Level Wind Wear Limits.

ITEM NO.	ITEM/POINT OF MEASUREMENT	WEAR LIMITS/TOLERANCES	
		INCHES	MILLIMETERS
1	Thrust washers - thickness - minimum	0.0615	1.562
2	Axles (4 places) – minimum	1.9995	50.787
4	Pivot shaft bearing surface – outer diameter - minimum	0.8745	22.212
5	Trolley frame shaft bore – inner diameter – maximum	0.750	19.05
8	Ball bearings – minimum	0.5620	14.275
12	Races		
10	Grooves - thickness – minimum	0.404	10.26
11	Race - inner diameter - maximum	2.811	71.40
13	Trolley wheel		
	Outer diameter – minimum	3.745	95.12
	Inner diameter – maximum	2.5622	65.08

16-9. REAR WINCH LEVEL WIND MAINTENANCE (Contd)

d. Assembly

1. Using arbor press, install bearing (14) on pivot frame (13).
2. Soak new felt washer (16) in lubricating oil and install pivot shaft (15) on pivot frame (13) with felt washer (16), washer (17), and new locknut (18).
3. Install bearing (4), race (5), two spacers (2), and grease fitting (19) on sheave (3).
4. Install pin (9) in shaft (11).
5. Install sheave (3), two thrust washers (1), shaft (11) and two snaprings (10) on pivot frame (13). Ensure pinhole in shaft (11) is alined with hole in pivot frame (13).
6. Install cable guard (6) on pivot frame (13) with four new lockwashers (7) and screws (8).
7. Soak new felt seal (12) in lubricating oil and install felt seal (12) on pivot frame (13).

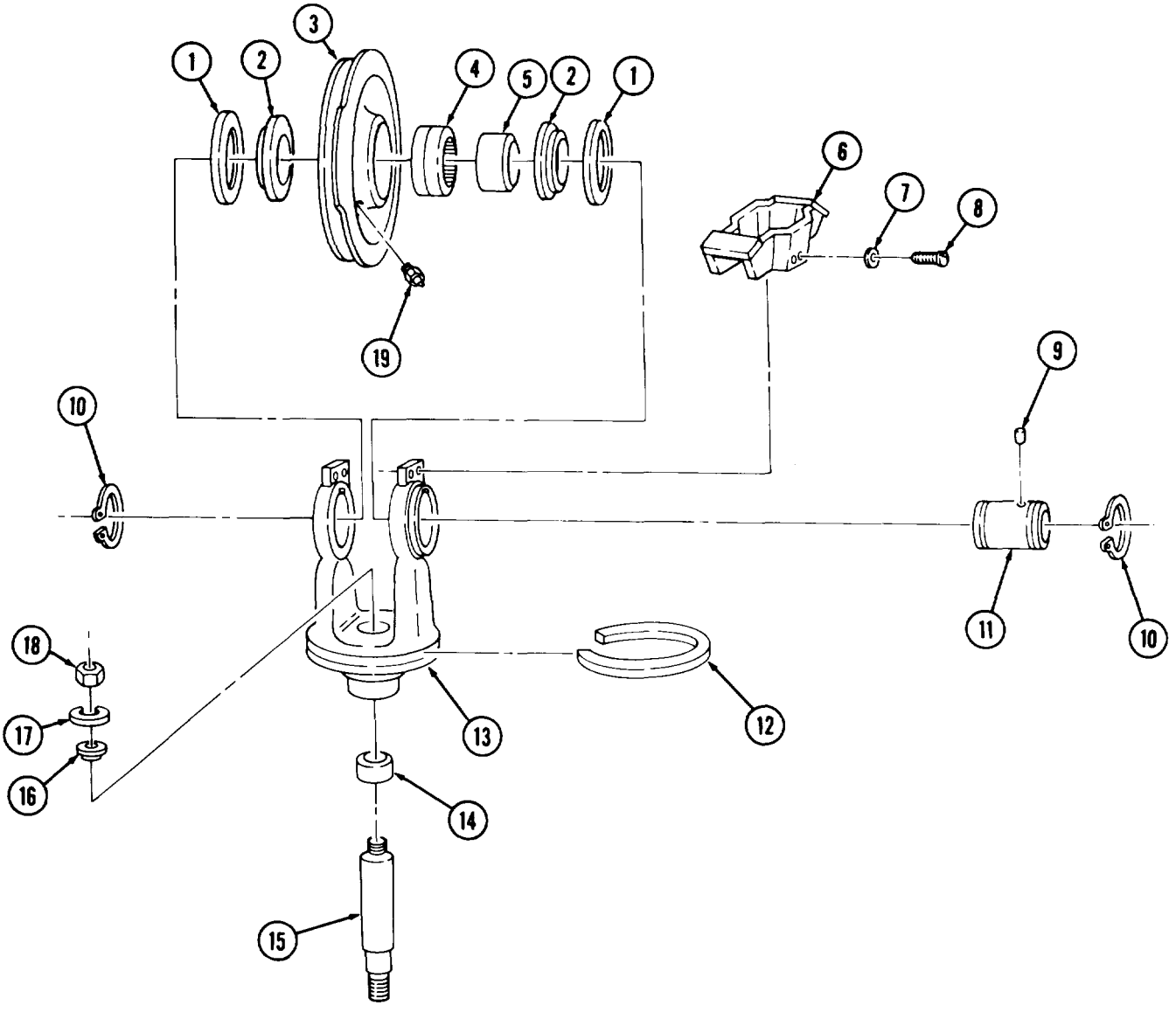

16-9. REAR WINCH LEVEL WIND MAINTENANCE [Contd)

NOTE

Coat all internal parts and bearings with GAA grease before installation.

8. Install forty-five ball bearings (35) on two races (20) and (21) and place two races (20) and (21) on trolley frame (33).
9. Install pivot frame (13) on trolley frame (33) with new locknut (31), Install grease fitting (32) in pivot shaft (15).
10. Install two grease fittings (30) on trolley frame (33).

NOTE

Wheel sets of both axles are installed the same. Left axle wheel set is shown.

11. Using arbor press, install two bearings (27) on wheels (26).
12. Soak four new felt washers (22) and (28) in lubricating oil.
13. Install two thrust washers (29), felt washers (28), wheels (26), felt washers (22), and washers (23) on axle (34) with two snaprings (24).
14. Install two grease fittings (25) on ends of axle (34).

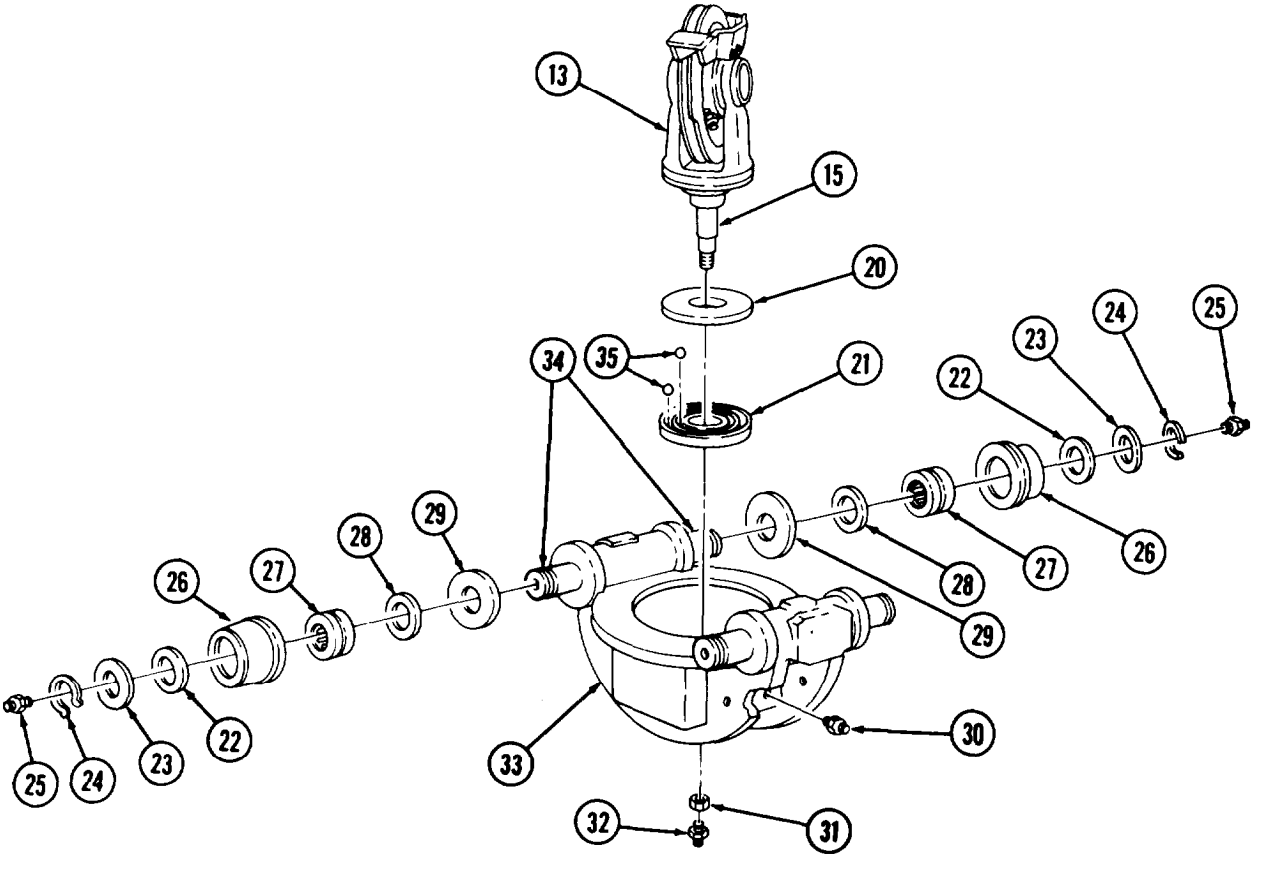

16-9. REAR WINCH LEVEL WIND MAINTENANCE (Contd)

15. Thread four jamnuts (2) on retainer screws (3).
16. Install four retainer screws (3) on trolley (1).
17. Install trolley (1) on track frame (5) and turn four retainer screws (3) through webs of trolley (1) until ends of retainer screws (3) project under track, but do not touch, frame of track frame (5). Tighten jamnuts (2).
18. Install two jamnuts (4) on stopscrews (12).
19. Install two stopscrews (12) on end plates of track frame (5) to position recorded during disassembly. Tighten jamnuts (4).
20. Install trolley poppet (6) and spring (7) on track frame (5) with poppet nut (8).
21. Install latch (9) on poppet (6) with inner nut (10). Ensure latch (9) allows poppet (7) to engage trolley (1) when latch (9) is in lock position, but allows trolley (1) to roll freely on track of track frame (5) when latch (9) is in unlock position.
22. When poppet movement is correct, install second nut (11) as a jamnut on poppet (6).

e. Installation

Position level wind (15) on winch (16) and install with four new lockwashers (13) and screws (14).

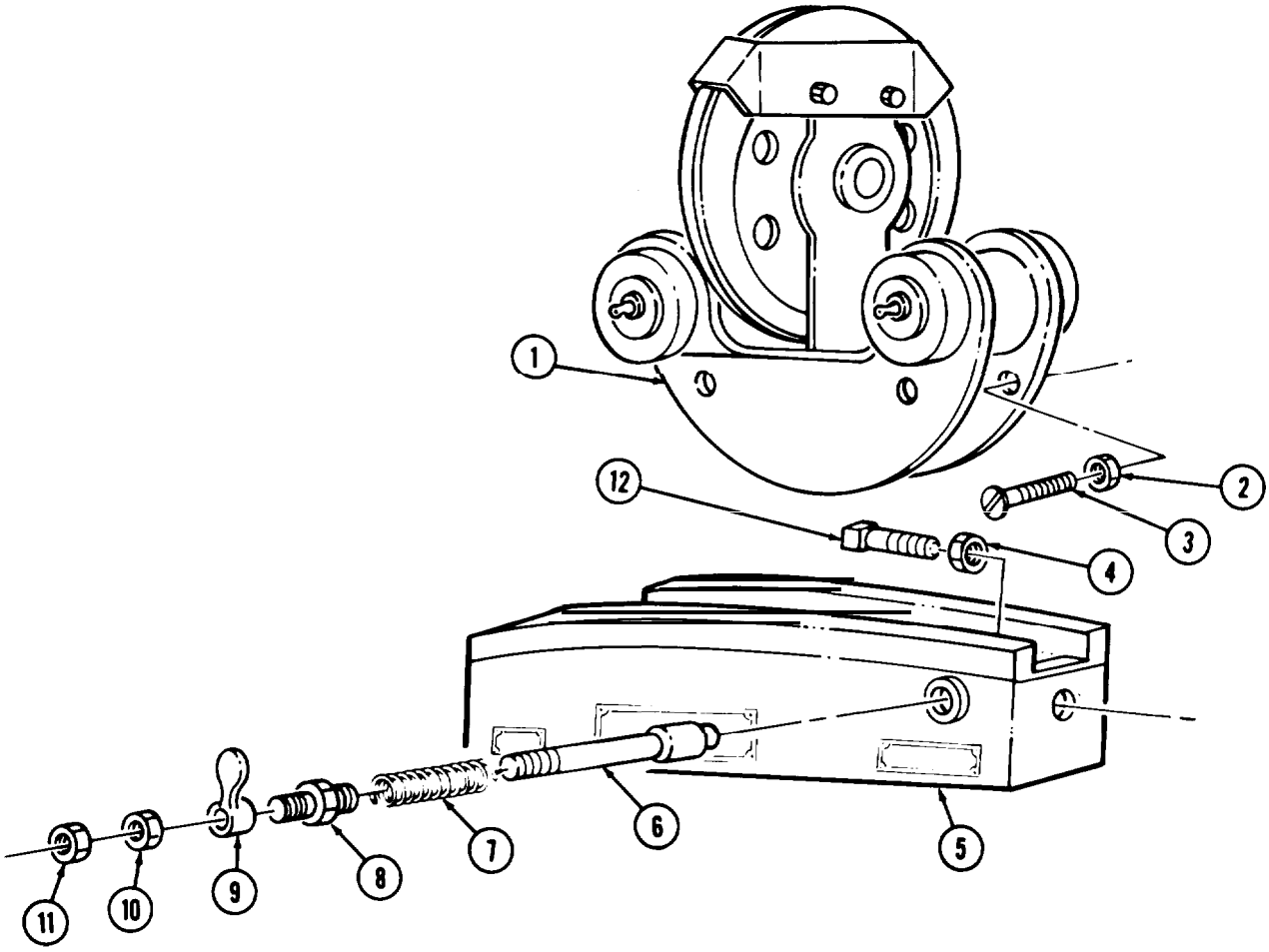

16-9. REAR WINCH LEVEL WIND MAINTENANCE (Contd)

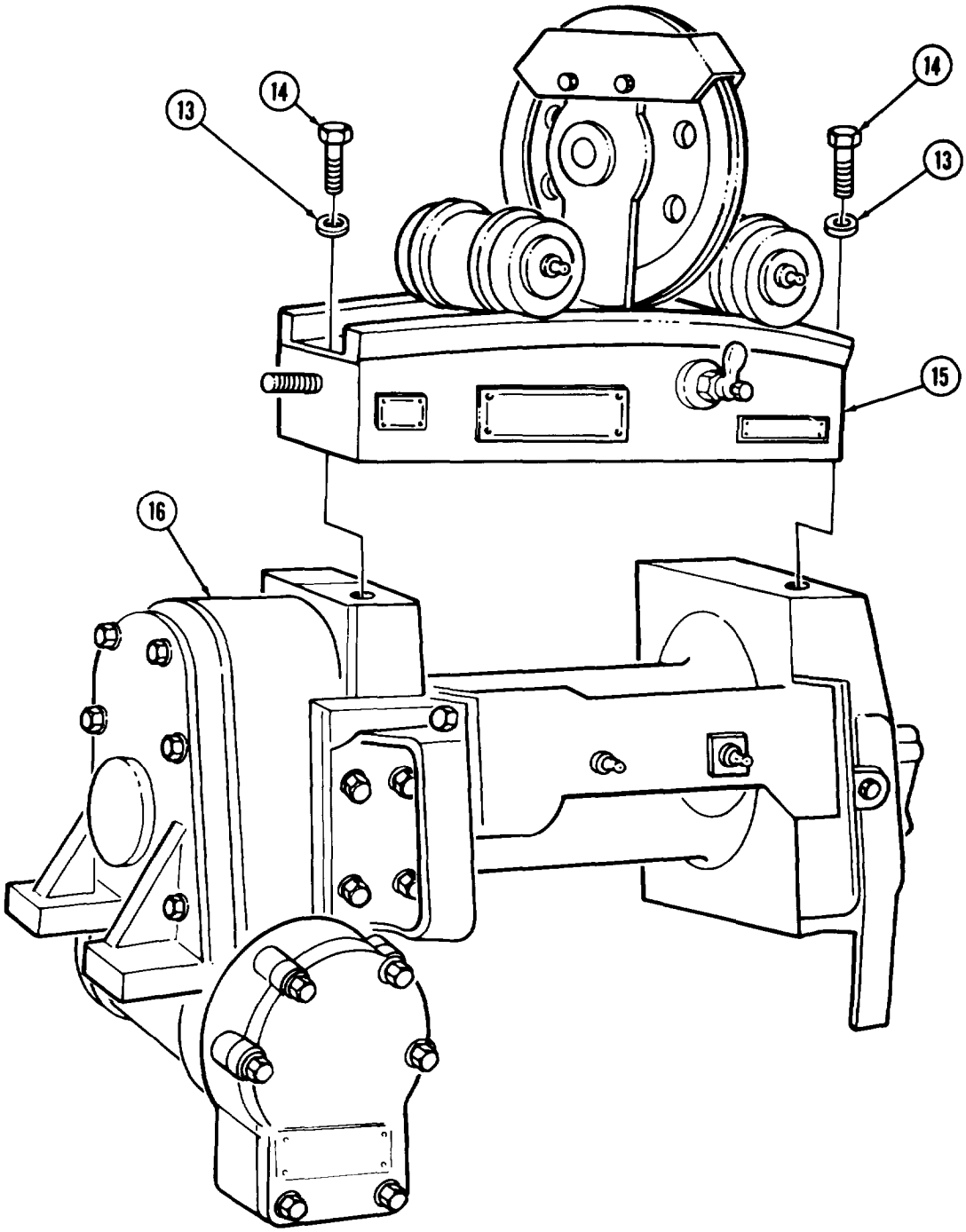

FOLLOW-ON TASKS: • Install rear winch cable (TM 9-2320-260-20).
• Adjust level wind stopscrews (TM 9-2320-260-20).

16-10. REAR WINCH CABLE TENSIONER MAINTENANCE

THIS TASK COVERS:

a. Disassembly
b. Cleaning and Inspection
c. Assembly

INITIAL SETUP

APPLICABLE MODELS
M816

TOOLS
General mechanic's tool kit (Appendix B, Item 1)
Inside micrometer (Appendix B, Item 9)
Outside micrometer (Appendix B, Item 8)

MATERIALS/PARTS
Two cotter-pins (Appendix D, Item 38)
Four felt washers (Appendix D, Item 529)
Lubricating oil (Appendix C, Item 21)

REFERENCES (TM)
LO 9-2320-260-12
TM 9-2320-260-20
TM 9-2320-260-34P-2

EQUIPMENT CONDITION
- Rear winch cable removed (TM 9-2320-260-20).
- Rear tensioner assembly removed (para. 16-8).

a. Disassembly

1. Remove grease fitting (7) from pin (8).
2. Remove cotter pin (1) and pin (8) from sheave (5) and frame (2). Discard cotter pin (1).
3. Remove sheave (5) and two thrust washers (3) from frame (2).
4. Remove two felt washers (4) and bearing (6) from sheave (5). Discard felt washers (4).
5. Remove grease fitting (16) from pin (15).
6. Remove cotter pin (9) and pin (15) from fork (10), sheave (13), and frame (2). Discard cotter pin (9).
7. Remove sheave (13) and two thrust washers (11) from fork (10).
8. Remove fork (10) from frame (2).
9. Remove two felt washers (12) and bearing (14) from sheave (13). Discard felt washers (12).

b. Cleaning and Inspection

1. For general cleaning instructions, refer to para. 2-8.
2. For general inspection instructions, refer to para. 2-9.
3. Inspect frame (2) for breaks, cracks, distortion, and broken or loose welds. Replace frame (2) if damaged.
4. Inspect fork (10) for breaks, cracks, misalinement of rod and plates, and broken or loose welds, Replace fork (10) if damaged.

16-10. REAR WINCH CABLE TENSIONER MAINTENANCE (Contd)

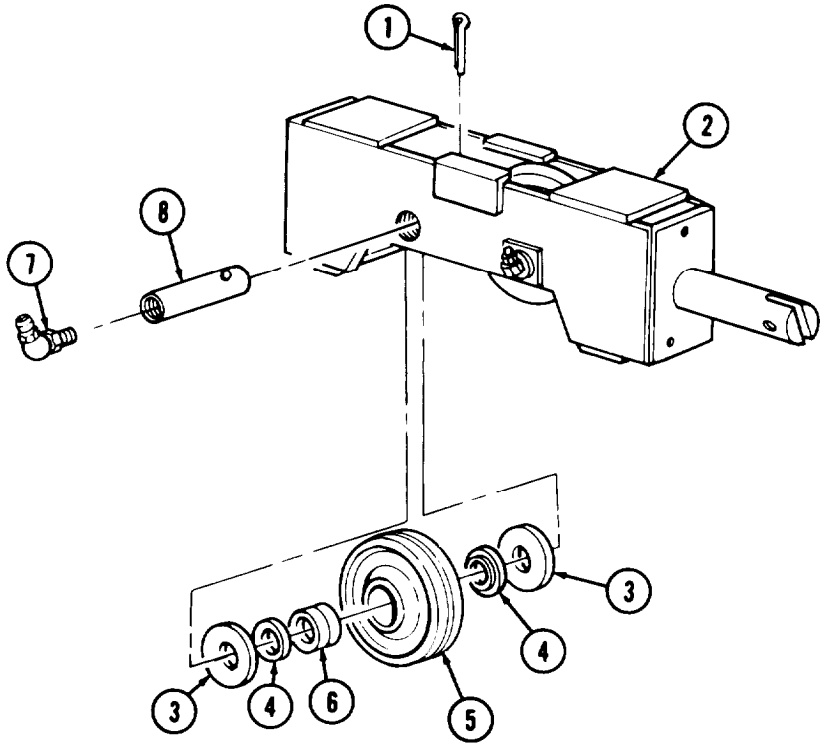

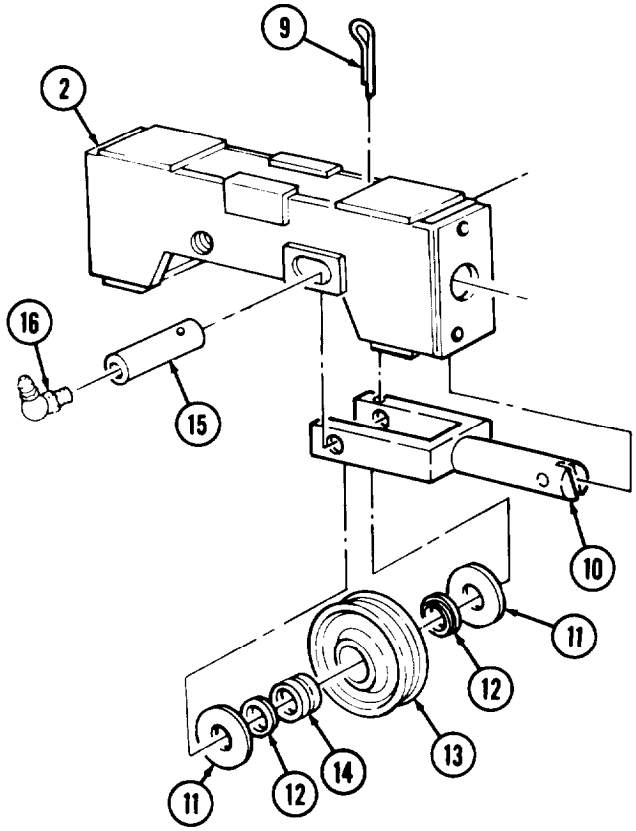

16-10. REAR WINCH CABLE TENSIONER MAINTENANCE (Contd)

5. Inspect four thrust washers (1), two pins (2), sheaves (3), and bearings (4) for breaks, cracks, scoring, chips, damaged threads, blocked lubrication passages, and excessive wear. Refer to table 16-10, Rear Winch Tensioner Parts Wear Limits, for measurements. Replace part(s) if damaged or worn.

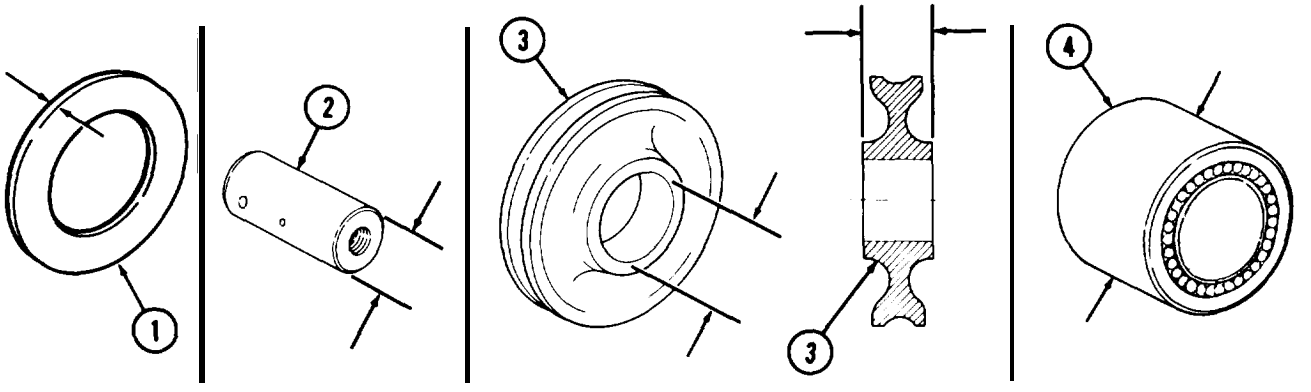

Table 16-10. Rear Winch Tensioner Parts Wear Limits.

ITEM NO.	ITEM/POINT OF MEASUREMENT	WEAR LIMITS/TOLERANCES	
		INCHES	MILLIMETERS
1	Thrust washers – thickness - minimum	0.0615	1.562
2	Pins – diameter – minimum	1.2495	31.737
3	Sheaves		
	Hub – thickness – minimum	1.480	37.59
	Bore - inner diameter – maximum	1.7497	44.442
4	Bearings – outer diameter – minimum	1.7495	44.437

c. Assembly

1. Install bearing (4) in sheave (3). Ensure bearing (4) is centered in bore.
2. Soak two new felt washers (8) in lubricating oil and install one felt washer (8) on each side of bearing (4) in sheave (3).
3. Position rod end of fork (7) through right end plate of frame (5).
4. Install sheave (3) and two thrust washers (1) in fork (7) and frame (5) with pin (2) and new cotter pin (6). Ensure threaded end of pin (2) is facing out.
5. Install grease fitting (9) in pin (2).
6. Install bearing (4) in sheave (3). Ensure bearing (4) is centered in bore.
7. Soak two new felt washers (11) in lubricating oil and install one felt washer (11) on each side of bearing (4) in sheave (3).
8. Position two thrust washers (1) and sheave (3) in left end of frame (5) and install with pin (2) and new cotter pin (10). Ensure threaded end of pin (2) is facing out.
9. Install grease fitting (12) in pin (2).

16-10. REAR WINCH CABLE TENSIONER MAINTENANCE (Contd)

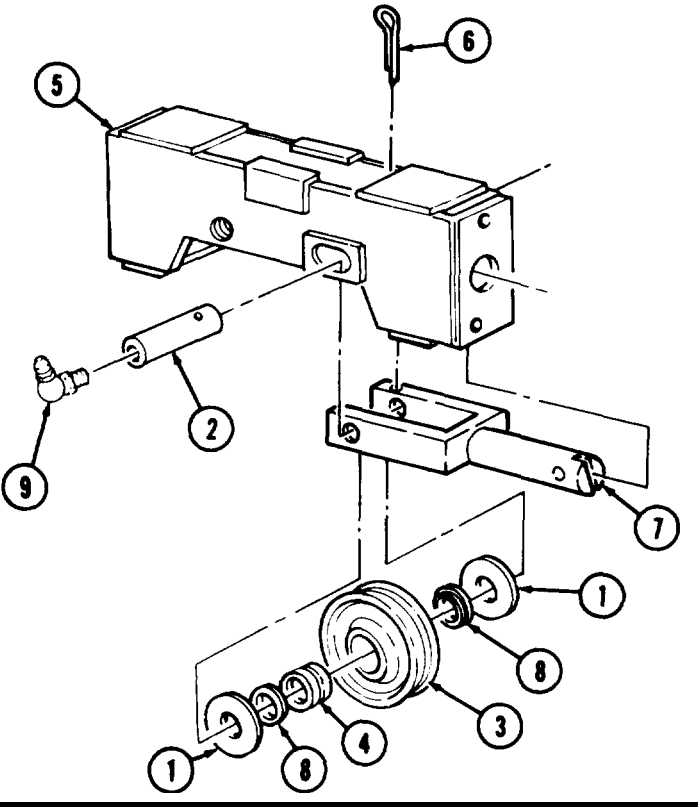

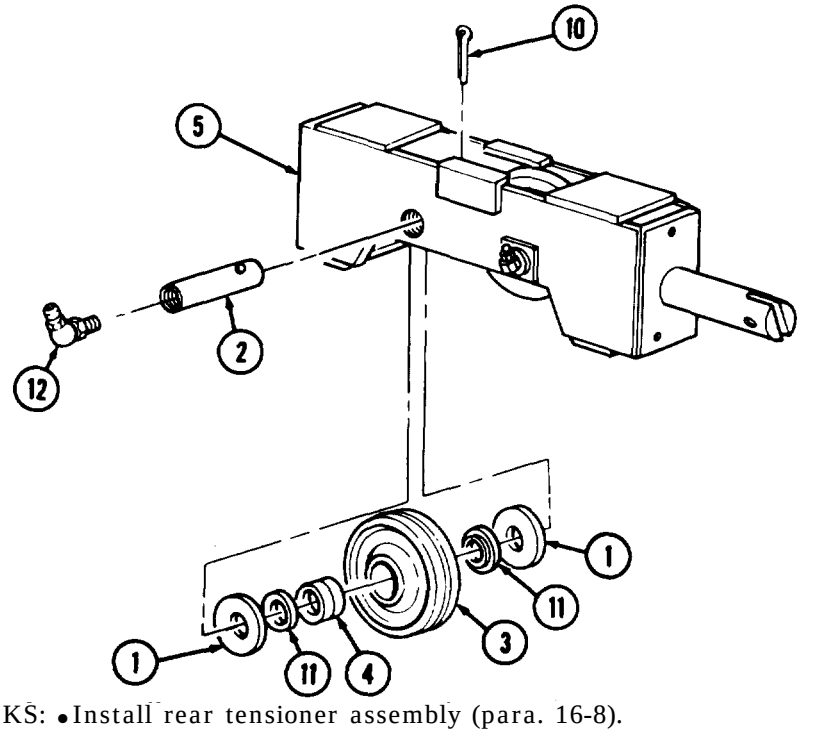

FOLLOW-ON TASKS:
- Install rear tensioner assembly (para. 16-8).
- Lubricate tensioner assembly (LO 9-2320-260-12).
- Install rear winch cable (TM 9-2320-260-20).

16-11. REAR WINCH AUTOMATIC BRAKE MAINTENANCE

THIS TASK COVERS:

a. Removal
b. Cleaning and Inspection
c. Installation

INITIAL SETUP

APPLICABLE MODELS
M816

TOOLS
General mechanic's tool kit (Appendix B, Item 1)
Mechanical puller kit (Appendix B, Item 14)
Outside micrometer (Appendix B, Item 8)

MATERIALS/PARTS
Lockwasher (Appendix D, Item 218)
Gasket (Appendix D, Item 97)

MATERIALS/PARTS (Contd)
Six screw-assembled lockwashers (Appendix D, Item 382)
Woodruff key (Appendix D, Item 557)
O-ring (Appendix D, Item 293)

REFERENCES (TM)
TM 9-2320-260-20
TM 9-2320-260-34P-2

EQUIPMENT CONDITION
Rear winch removed (TM 9-2320-260-20).

a. Removal

1. Remove six screw-assembled lockwashers (15), cover (14), and gasket (13) from housing (6). Discard screw-assembled lockwashers (15) and gasket (13).
2. Remove screw (1), washer (2), O-ring (3), and spring (12) from brake band (11) and housing (6). Discard O-ring (3).
3. Remove brake band (11) from brakedrum (7).
4. Remove screw (10), lockwasher (9), and washer (8) from shaft (5). Discard lockwasher (9).
5. Using puller, remove brakedrum (7) from shaft (5).
6. Remove woodruff key (4) from shaft (5). Discard woodruff key (4).

b. Cleaning and Inspection

1. For general cleaning instructions, refer to para. 2-8.
2. For general inspection instructions, refer to para. 2-9.
3. Inspect cover (14) for breaks and cracks. Replace cover (14) if broken or cracked.
4. Inspect brakedrum (7) and brake band (11) for breaks, cracks, scoring, and wear. Refer to table 16-11, Automatic Brake Wear Limits, for measurements. Replace brakedrum (7) or brake band (11) if damaged or worn.
5. Inspect spring (12) for broken coils and distortion. Using spring tester, compress spring (12) and check for wear. Refer to table 16-11, Automatic Brake Wear Limits, for measurements. Replace spring (12) if damaged or worn.

Table 16-11. Automatic Brake Wear Limits.

ITEM NO.	ITEM/POINT OF MEASUREMENT	WEAR LIMITS/TOLERANCES	
		INCHES	MILLIMETERS
7	Brakedrum - outer diameter – minimum	5.497	139.62
11	Brake band - minimum thickness to rivet head	0.070	1.78
12	Spring		

16-11. REAR WINCH AUTOMATIC BRAKE MAINTENANCE (Contd)

c. Installation

1. Install new woodruff key (6) in shaft (5).
2, Aline slot in brakedrum (7) with woodruff key (6) and install on shaft (5) with washer (8), new lockwasher (9), and screw (10).
3. Place brake band (11) on brakedrum (7), with captive nut (16) leg on right.
4. Install new O-ring (3) in brake housing (4).
5. Place washer (2) on adjusting screw (1) and insert screw (1) through seal (3), left wall of brake housing (4), spring (12), clearance hole in left leg of brake band (11), and thread into captive nut (16) in right leg of brake band (11).
6. Turn adjusting screw (1) until spring length (17) is 2.125-2.187 in. (53.98-55.55 mm).
7. Position new gasket (13) and cover (14) on housing (4) and install with six new screw-assembled lockwashers (15).

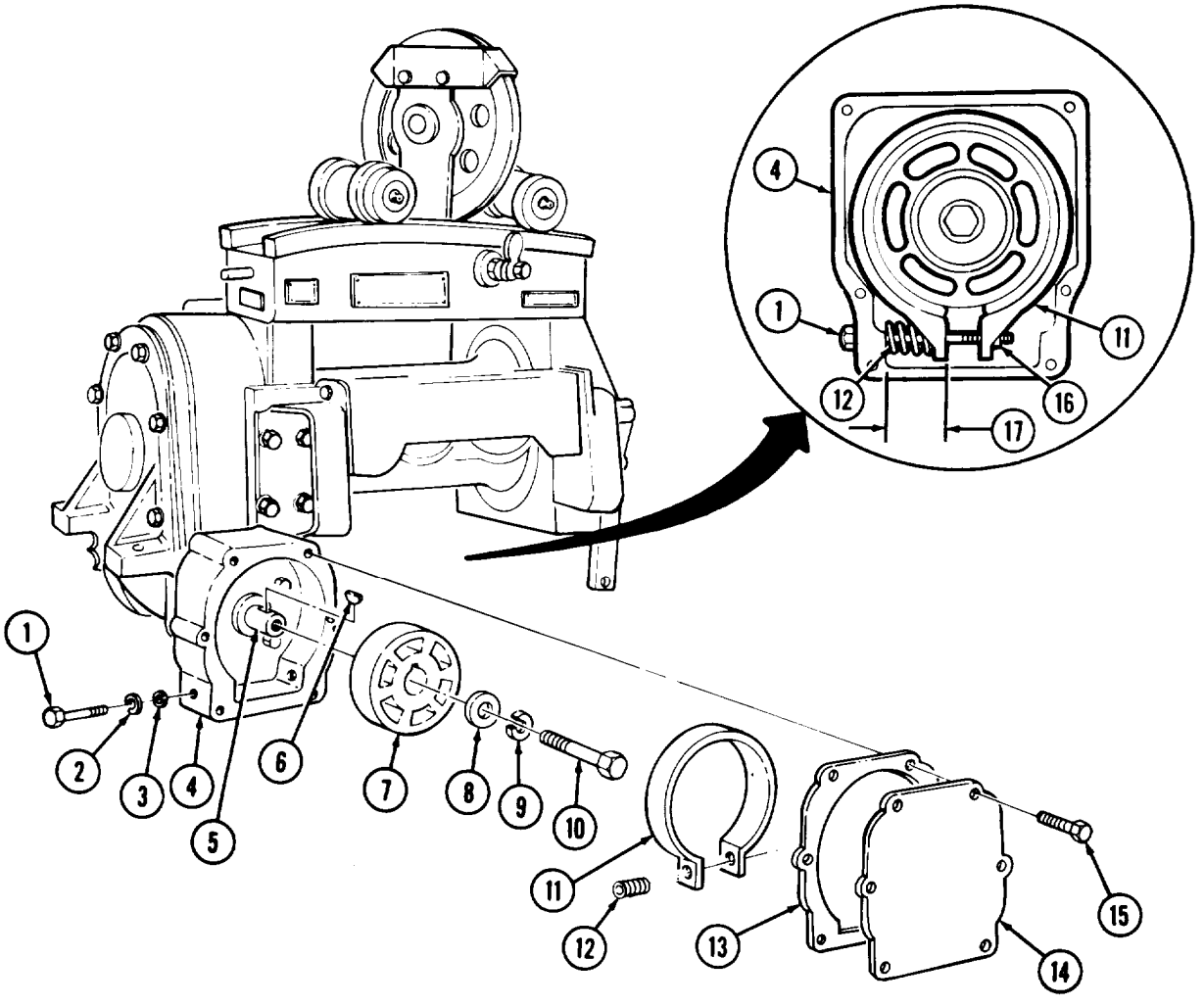

FOLLOW-ON TASKS: • Install rear winch (TM 9-2320-260-20).
• Adjust automatic brake (TM 9-2320-260-20).

Section III. CRANE AND HOIST MAINTENANCE

16-12. CRANE AND HOIST MAINTENANCE INDEX

Para NO.	TITLE	PAGE NO.
16-13.	Upper and Lower Boom Roller Maintenance (M816)	16-76
16-14.	Boom Elevating Cylinders Maintenance (M816)	16-81
16-15.	Hoist Winch Motor Replacement (M816)	16-90
16-16.	Hoist Level Wind Maintenance (M816)	16-92
16-17.	Hoist Winch Maintenance (M816)	16-94
16-18.	Boom Assembly Replacement (M816)	16-104
16-19.	Inner Boom Maintenance (M816)	16-112
16-20.	Extension Cylinder Repair (M816)	16-120
16-21.	Boom Repair (M816)	16-124
16-22.	Crane Gondola Maintenance (M816)	16-130
16-23.	Hoist Hydraulic Winch Motor Replacement (M816)	16-138
16-24.	Hoist Hydraulic Pump and Support Maintenance (M816)	16-140
16-25.	Hoist Bevel Gearcase Repair (M816)	16-144
16-26.	Crane Turntable Maintenance (M816)	16-156
16-27.	Control Valve Repair (M816)	16-164
16-28.	Crane Gearcase Maintenance (M816)	16-168
16-29.	Crane Cab (Gondola) Replacement (M819)	16-174
16-30.	Boom Swing Mechanism Replacement (M819)	16-176
16-31.	Cable Hoist Winch Replacement (M819)	16-178
16-32.	Hydraulic Swivel Valve Replacement (M819)	16-182
16-33.	Boom Lift Cylinder Maintenance (M819)	16-188
16-34.	Crane Shipper, Boom, Boom Extension, and Rollers Maintenance (M819)	16-194
16-35.	Boom Extension Cylinder Maintenance (M819)	16-214
16-36.	Control Valve Bank Replacement (M819)	16-218
16-37.	Relief Valve Maintenance (M819)	16-224
16-38.	Check Valves Replacement (M819)	16-228

16-13. UPPER AND LOWER BOOM ROLLER MAINTENANCE (M816)

THIS TASK COVERS:

a. Removal
b. Disassembly
c. Cleaning and Inspection
d. Assembly
e. Installation

INITAL SETUP

APPLICABLE MODELS
M816

TOOLS
General mechanic's tool kit (Appendix B, Item 1)
Mechanical puller kit (Appendix B, Item 14)

MATERIALS/PARTS
Six lockwashers (Appendix D, Item 219)
Sixteen lockwashers (Appendix D, Item 223)
Shim (Appendix D, Item 488)

MATERIALS/PARTS (Contd)
Shim (Appendix D, Item 491)
Two woodruff keys (Appendix D, Item 551)
Sealing compound (Appendix C, Item 44)

References TM)
TM 9-2320-260-10
TM 9-2320-260-20
TM 9-2320-260-34P-2

EQUIPMENT CONDITION
Parking brake set (TM 9-2320-260-10).

16-13. UPPER AND LOWER BOOM ROLLER MAINTENANCE (M816) (Contd)

a. Removal

NOTE

- Upper and lower boom rollers are removed and installed the same. This procedure covers the upper boom roller.
- Assistant will help with removal task.

Remove six screws (1), lockwashers (2), and upper boom roller (3) from boom (4). Discard lockwashers (2).

b. Disassembly

NOTE

- Measure shim thickness on each side and record for installation.
- Mark wheels, hub bodies, and shaft for installation.

1. Remove eight screws (5) and lockwashers (6) from two shaft supports (7). Discard lockwashers (6).
2. Using a brass drift and hammer, drive shaft (13) and one shaft support (7) part way out of housing (9).
3. Using a mechanical puller, remove the protruding shaft support (7) and shims (8) from shaft (13) and housing (9).
4. Repeat steps 2 and 3 to remove opposite shaft support (7) and shims (8).
5. Measure shims (8) as a pack. Record thickness of each side for installation.
6. Remove wheels (11) and shaft. (13) from housing (9).
7. Remove wheels (11) and bearings (12) from shaft (13).
8. Remove two woodruff keys (10) from shaft (13). Discard woodruff keys (10).
9. Remove bearings (12) from wheels (11) by carefully driving a punch through holes (14) in wheels (11).

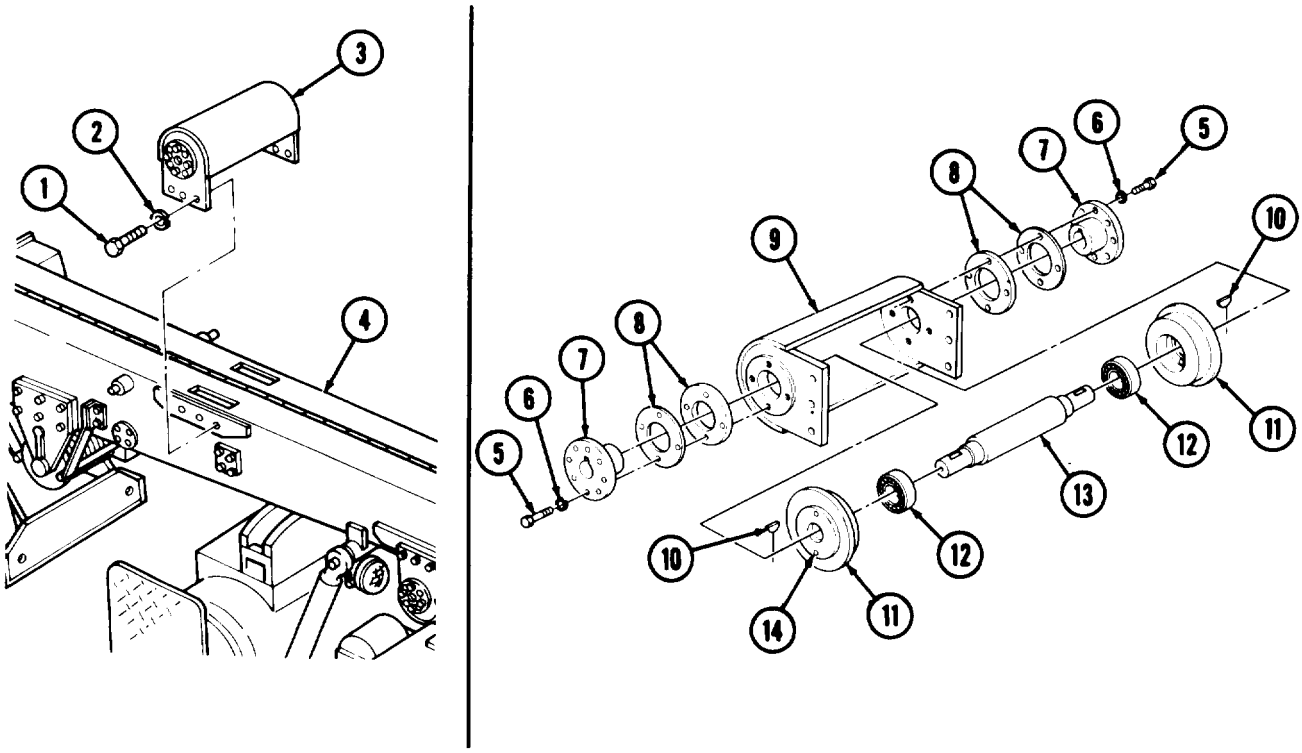

16-13. UPPER AND LOWER BOOM ROLLER MAINTENANCE (M816) (Contd)

c. Cleaning and Inspection

1. For general cleaning instructions, refer to para. 2-8.
2. For general inspections instructions, refer to para 2-9.

d. Assembly

1. Press bearings (8) on shaft (9). Seat inner race of bearings (8) to shoulders of shaft (9).
2. Supporting outer race of bearings (8), press wheels (7) on bearings (8).

NOTE

If new parts, except shims, were installed in boom roller, a new height adjustment must be made after installation. Assemble with woodruff keys pointing toward boom to provide maximum clearance.

3. Install two new woodruff keys (6) in shaft (9).
4. Install wheels (7) and shaft (9) in housing (5).
5. Place two 0.25 in. (6.4 mm) dots of sealing compound on housing (5) 180° apart. Install shims (4) on housing (5) over sealing compound.
6. Add shims (4) as necessary, with dots of sealing compound in between, until thickness recorded during disassembly is equalled. Do not apply sealing compound to outermost shims (4).

NOTE

Assistant will help with steps 7 through 10,

7. Press two shafts supports (3) onto shaft (9).
8. Turn housing (5) over on arbor press and place support under lower end of shaft (9). Ensure shaft supports (3) and shims (4) are tight against housing (5).
9. When second shaft support (3) is seated on shims (4), measure gaps (10) between shaft supports (3) and wheels (7).
   a. If gaps (10) are 0.030-0.180 in. (0.76-4.57 mm), go to step 10.
   b. If gaps (10) are less than 0.030 in. (0.76 mm), remove shaft supports (3), add shim(s) (4), and install shaft supports (3). Measure gaps (10) and go to step 10 if correct.
   c. If gaps (10) are greater than 0.180 in. (4.57 mm), remove shaft supports (3), remove shim(s) (4), and install shaft supports (3). Measure gaps (10) and go to step 10 if correct.
10. When gaps (10) are correct, aline index marks on shaft supports (3) with marks on housing (5) and install with sixteen new lockwashere (2) and screws (1).

16-13. UPPER AND LOWER BOOM ROLLER MAINTENANCE (M816) (Contd)

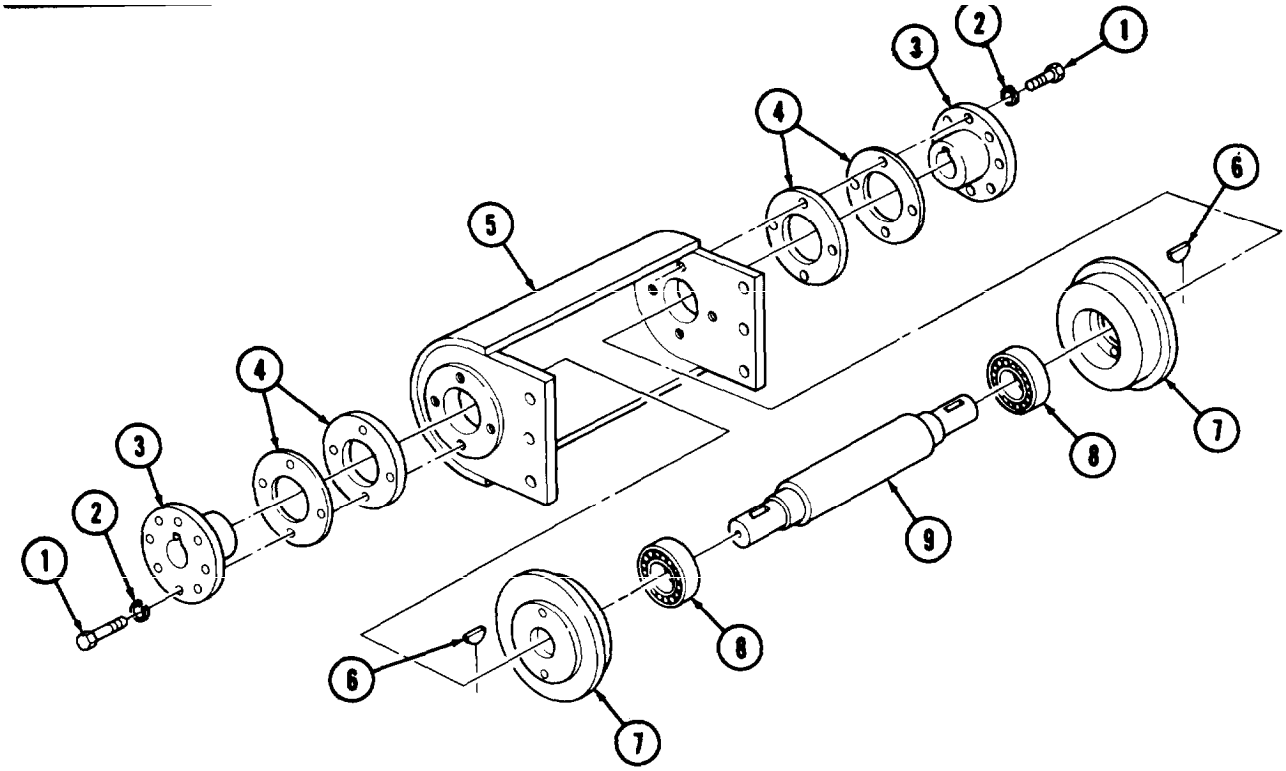

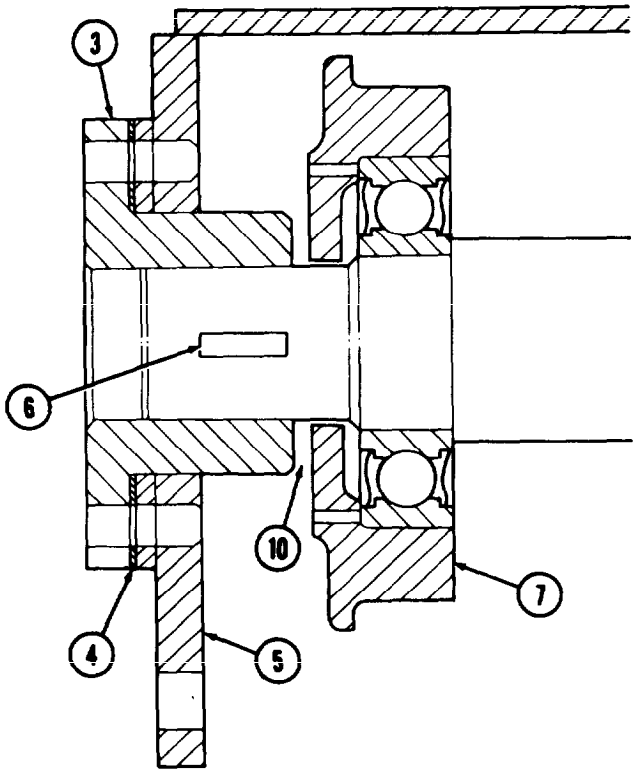

16-13. UPPER AND LOWER BOOM ROLLER MAINTENANCE (M816) (Contd)

e. Installation

NOTE

Assistant will help with installation.

Install boom roller (1) on boom (2) with six new lockwashers (4) and screws (3).

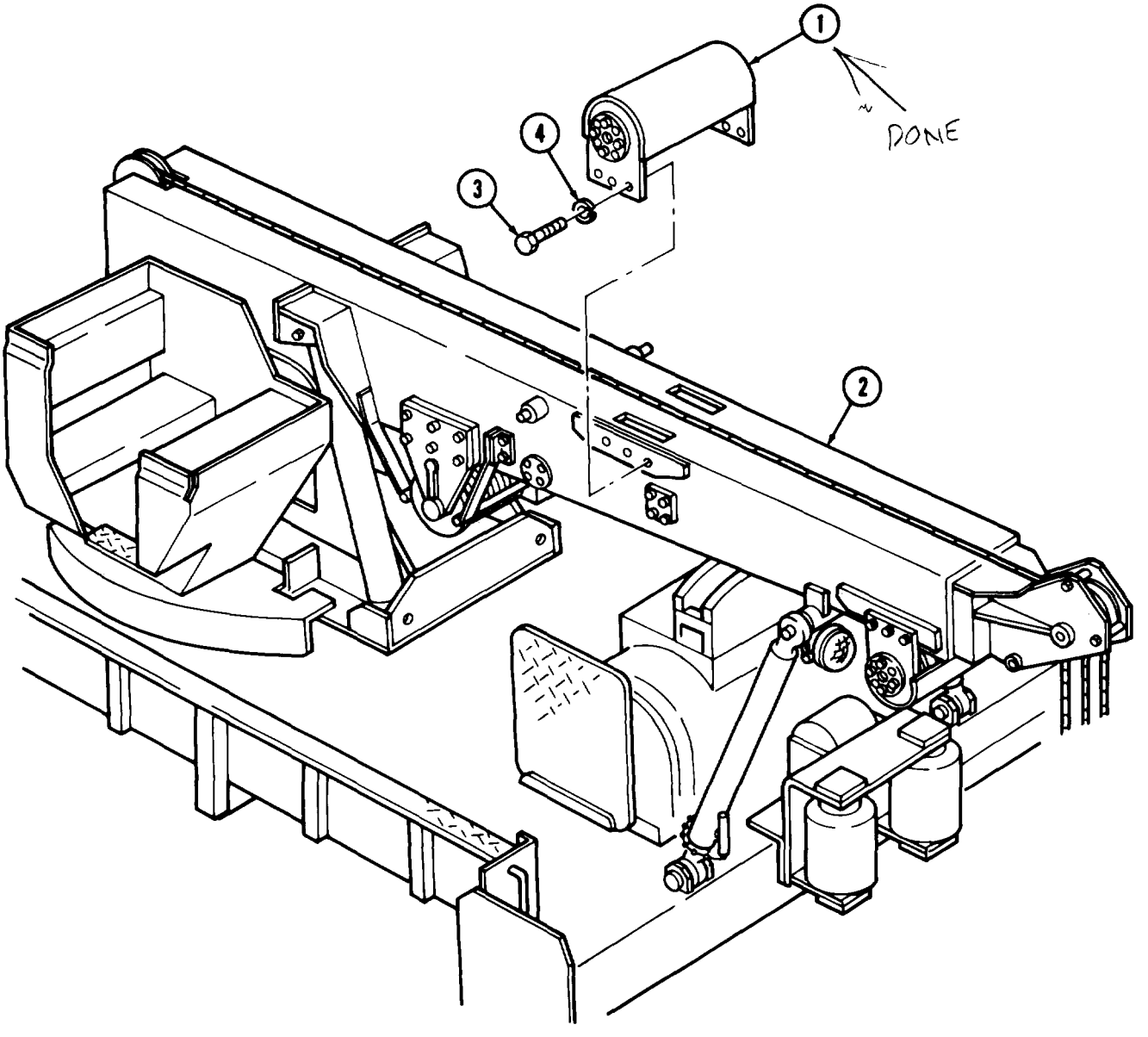

FOLLOW-ON TASK: Check boom roller height adjustment (TM 9-2320-260-20).

16-14. BOOM ELEVATING CYLINDERS MAINTENANCE (M816)

THIS TASK COVERS:

a. Removal
b. Disassembly
c. Cleaning and Inspection
d. Assembly
e. Installation

INITIAL SETUP

APPLICABLE MODELS
M816

TOOLS
General mechanic's tool kit (Appendix B, Item 1)
Spanner wrench (Appendix B, Item 136)
Bearing remover/replacer (Appendix B, Item 83)
1-1/2-in. open-end wrench (Appendix B, Item 119)
1-11/16-in. open-end wrench (Appendix B, Item 127)
Vise (Appendix B, Item 38)
Arbor press (Appendix B, Item 7)
Inside micrometer (Appendix B, Item 9)
Chain
Lifting device
Prybar

MATERIALS/PARTS
Lockwasher (Appendix D, Item 223)
Cotter pin (Appendix D, Item 45)
Seal (Appendix D, Item 463)
Packing (Appendix D, Item 308)
Packing (Appendix D, Item 312) ,
Packing (Appendix D, Item 310)
Bearing sleeve (Appendix D, Item 4)

MATERIALS/PARTS (Contd)
Cup seal (Appendix D, Item 476)
Two piston rings (Appendix D, Item 319)
Safety wire (Appendix D, Item 372)
Twine (Appendix C, Item 54)
Antiseize tape (Appendix C, Item 50)
Cap and plug set (Appendix C, Item 6)
Lubricating oil (Appendix C, Item 21)
GAA grease (Appendix C, Item 14)

REFERENCES (TM)
LO 9-2320-260-12
TM 9-2320-260-10
TM 9-2320-260-34P-2

EQUIPMENT CONDITION
- Parking brake set (TM 9-2320-260-10).
- Boom raised and shipper braces installed (TM 9-2320-260-10).
- Gondola guard removed (left elevating cylinder) (TM 9-2320-260-10).

GENERAL SAFETY INSTRUCTIONS
- All personnel must stand clear during lifting operations.
- Ensure lifting capacity is greater than weight of boom elevating cylinders.

16-14. BOOM ELEVATING CYLINDERS MAINTENANCE (M816) (Contd)

a. Removal

CAUTION

- Clean area around hoses and lines before removal to prevent entry of dirt. Damage will occur if dirt or dust enters system.
- Cap or plug all openings immediately after disconnecting lines and hoses to prevent contamination. Remove caps or plugs prior to installation. Failure to do so may result in damage to equipment.

NOTE

- Left and right elevating cylinders are maintained the same. This procedure covers the right elevating cylinder.
- Assistance is needed when removing elevating cylinder.
- Tag hydraulic hoses for installation.
- Have drainage container ready to catch oil.

1. Install chain on boom (1) and attach to lifting device. Remove slack from chain.
2. Disconnect hose (12) from elbow **(4)** and check valve (13).
3. Disconnect hose (19) from elbow (14). Tie hose (19) out of the way.

WARNIN6

- All personnel must stand clear during lifting operations. A swinging or shifting load may cause injury to personnel.
- Ensure lifting capacity is greater than weight (160 lb (73 kg)) of boom elevating cylinders. Failure to do so may result in injury to personnel or damage to equipment.

4. Raise boom (1). Release shipper braces (2) from boom (1) and install on wrecker body (3).
5. Lower boom (1) and remove lifting device and chain.
6. Install chain on elevating cylinder (5) and attach to lifting device. Take up slack in chain.
7. Remove screw (10), lockwasher (9), washer (8), and keeper pin (7) from bracket (6) and piston rod trunnion (11). Discard lockwasher (9).
8. Remove cotter pin (16) from pin (18). Discard cotter pin (16).
9. Using hammer and drift, remove pin (18) from bracket (17) and cylinder housing trunnion (15).
10. Using prybar and lifting device, remove elevating cylinder (5) from brackets (6) and (17).
11. Remove lifting device and chain from elevating cylinder (5).

16-14. BOOM ELEVATING CYLINDERS MAINTENANCE (M816) (Contd)

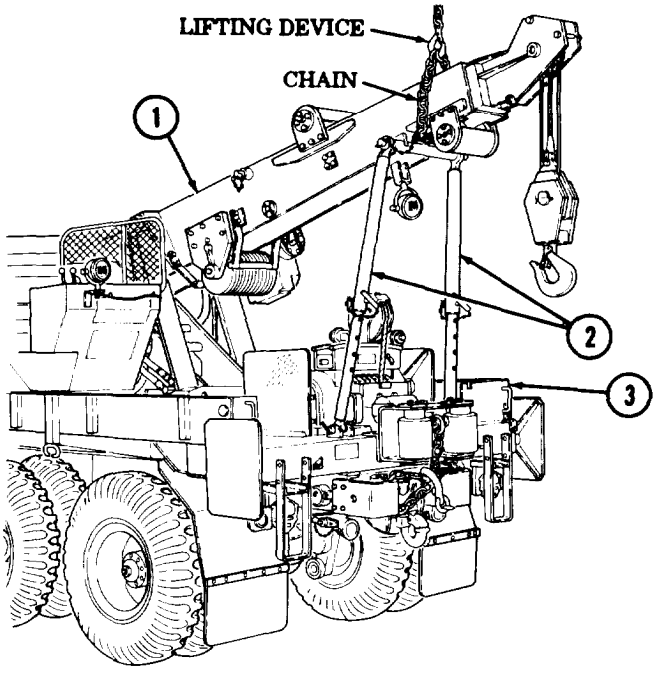

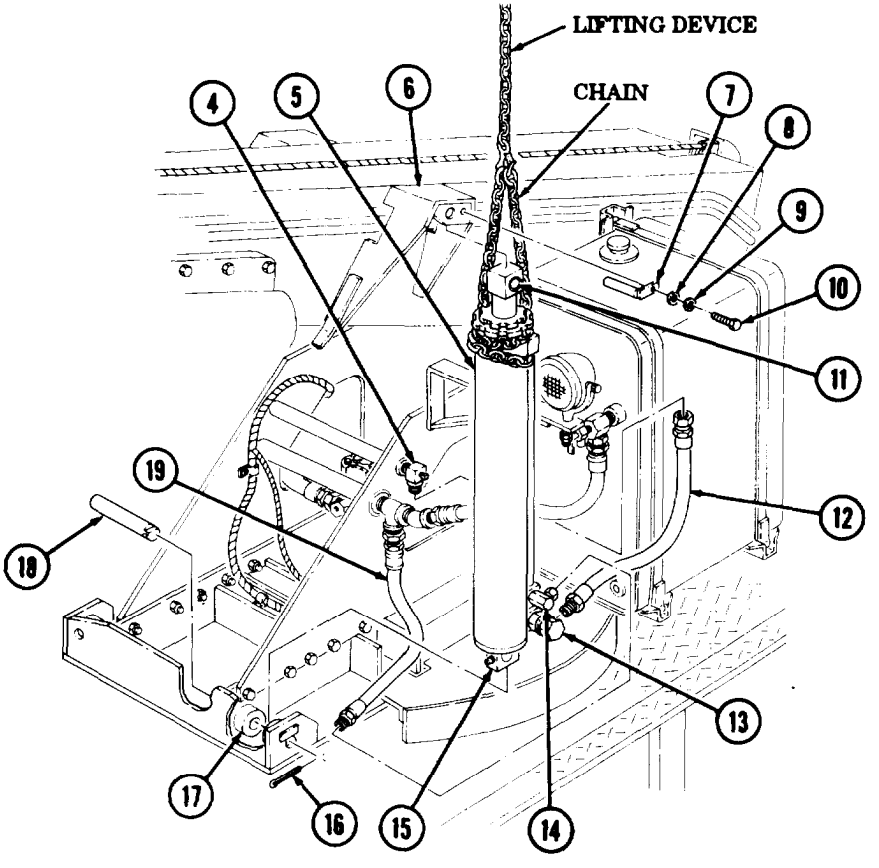

16-14. BOOM ELEVATING CYLINDERS MAINTENANCE (M816) (Contd)

b. Disassembly

NOTE

Record position of check valve and elbow for installation.

1. Remove elbow (7) and check valve (8) from cylinder housing (6).
2. Remove two grease fittings (4) from cylinder housing trunnion (9) and piston rod trunnion (5).
3. Using spanner wrench, remove cylinder head (2) piston rod (3), and piston (1) from cylinder housing (6).
4. Install piston rod (3) in vise.
5. Remove safety wire (10) from piston rod (3) and nut (11). Discard safety wire (10).
6. Remove nut (11), washer (12), retainer washer (13), piston (1), and packing (16) from piston rod (3). Discard packing (16).
7. Remove two piston rings (15) and cup seal (14) from piston (1). Discard piston rings (15) and cup seal (14).
8. Remove cylinder head (2) from piston rod (3).
9. Using spanner wrench, remove packing nut (21) from cylinder head (2).
10. Remove seal (22) from packing nut (21). Discard seal (22).
11. Remove piston rod packing (20) and packing (18) from cylinder head (2). Discard piston rod packing (20) and packing (18).
12. Using arbor press, remove bearing sleeve (19) from cylinder head (2). Discard bearing sleeve (19).
13. Remove piston rod (3) from vise.

c. Cleaning and Inspection

1. For general cleaning instructions, refer to para. 2-8.
2. For general inspection instructions, refer to para. 2-9.
3. Inspect piston rod (3) for bends, burrs, scratches, and damaged threads. Repair damaged threads. Replace piston rod (3) if bent, burred, or scratched.
4. Inspect two bushings (17) in piston rod trunnion (5) for nicks, scratches, cracks, and wear. Measure inside diameter of bushing(s) (17). If nicked, scratched, cracked, or inside diameter exceeds 1.5030 in. (38. 18mm), replace bushing(s) (17).
5. Inspect piston (1) for nicks, burrs, and scratches. Replace piston (1) if nicked, burred, or scratched.
6. Inspect cylinder housing (6) for cracks or scoring. Replace cylinder housing (6) if cracked, scored, or threads are damaged.

16-14. BOOM ELEVATING CYLINDERS MAINTENANCE (M816) (Contd)

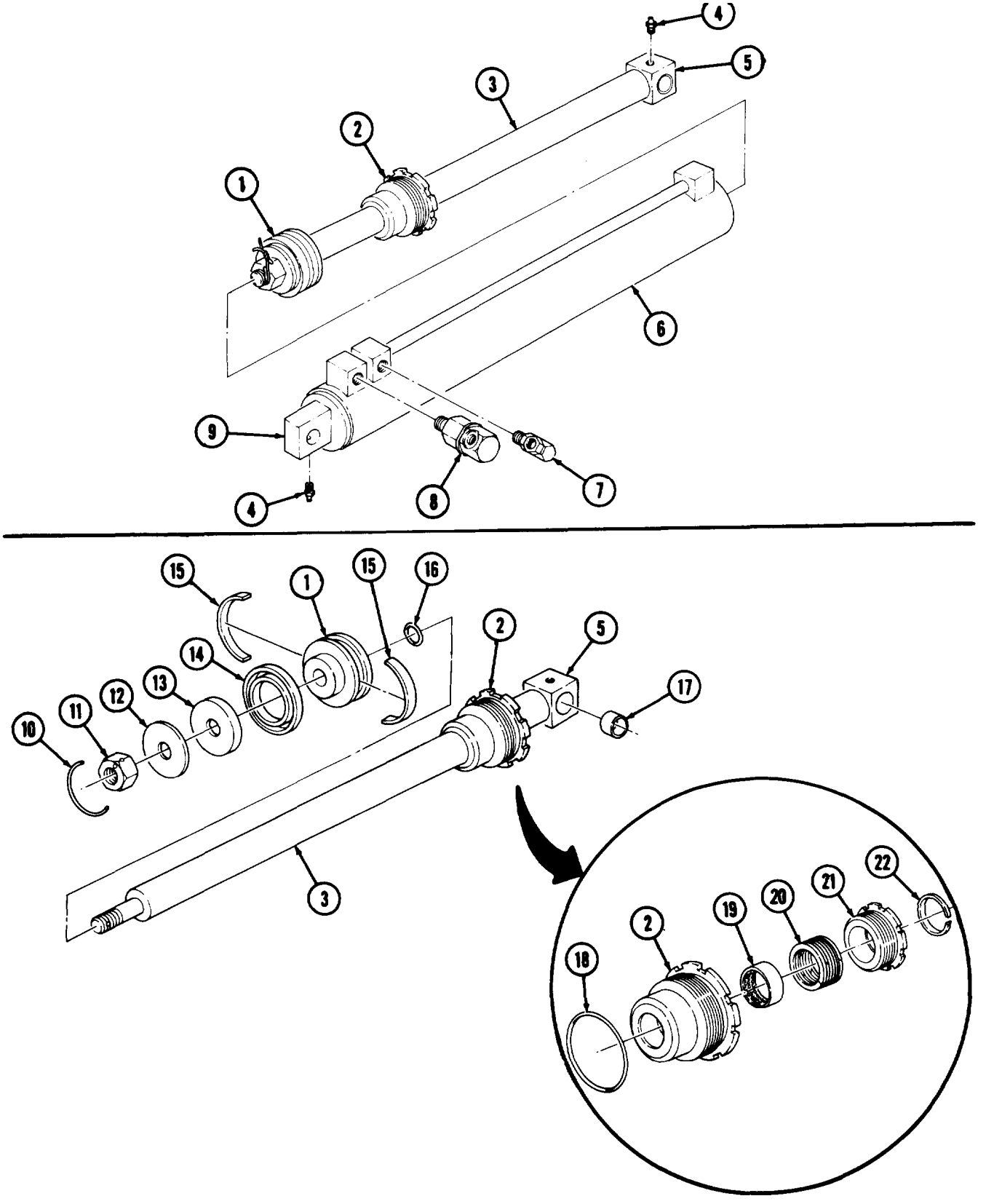

16-14. BOOM ELEVATING CYLINDERS MAINTENANCE (M186) (Contd)

d. Assembly

1. Install new seal (16) on packing nut (15).
2. Coat piston rod (11) with lubricating oil and install packing nut (15) on piston rod (11).
3. Using bearing replacer and handle, install new bearing sleeve (13) in cylinder head (9).
4. Coat new piston rod packing (14) with GAA grease and install in cylinder head (9). Ensure elements of piston rod packing (14) face away from toothed end of cylinder head (9).
5. Install new packing (12) on cylinder head (9).
6. Install cylinder head (9) on piston rod (11).
7. Using spanner wrench, install packing nut (15) on cylinder head (9). Tighten packing nut (15) until a distance of 0.125 in. (3.18 mm) remains.
8. Place piston rod trunnion (10) in vise.
9. Coat two new piston rings (6) with GAA grease and install on piston (7).
10. Install new cup seal (5) on piston (7).
11. Install new packing (8), piston (7), retainer washer (4), and washer (3) on piston rod (11) with nut (2).
12. Install new safety wire (1) on piston rod (11) and nut (2).
13. Remove piston rod (11) from vise.
14. Coat bore of cylinder housing (18) with lubricating oil.

NOTE

Assistant will help with step 15.

15. Insert piston (7) and piston rod (11) in cylinder housing (18). Ensure piston ring seals (6) stay seated and do not fold over.
16. Using spanner wrench, install cylinder head (9) on cylinder housing (18).
17. Wrap male threads of elbow (19) and check valve (20) with antiseize tape.
18. Install elbow (19) and check valve (20) on cylinder housing (18). Tighten to previously recorded position.
19. Install grease fittings (17) on cylinder housing trunnion (21) and piston rod trunnion (10).

16-14. BOOM ELEVATING CYLINDERS MAINTENANCE (M186) (Contd)

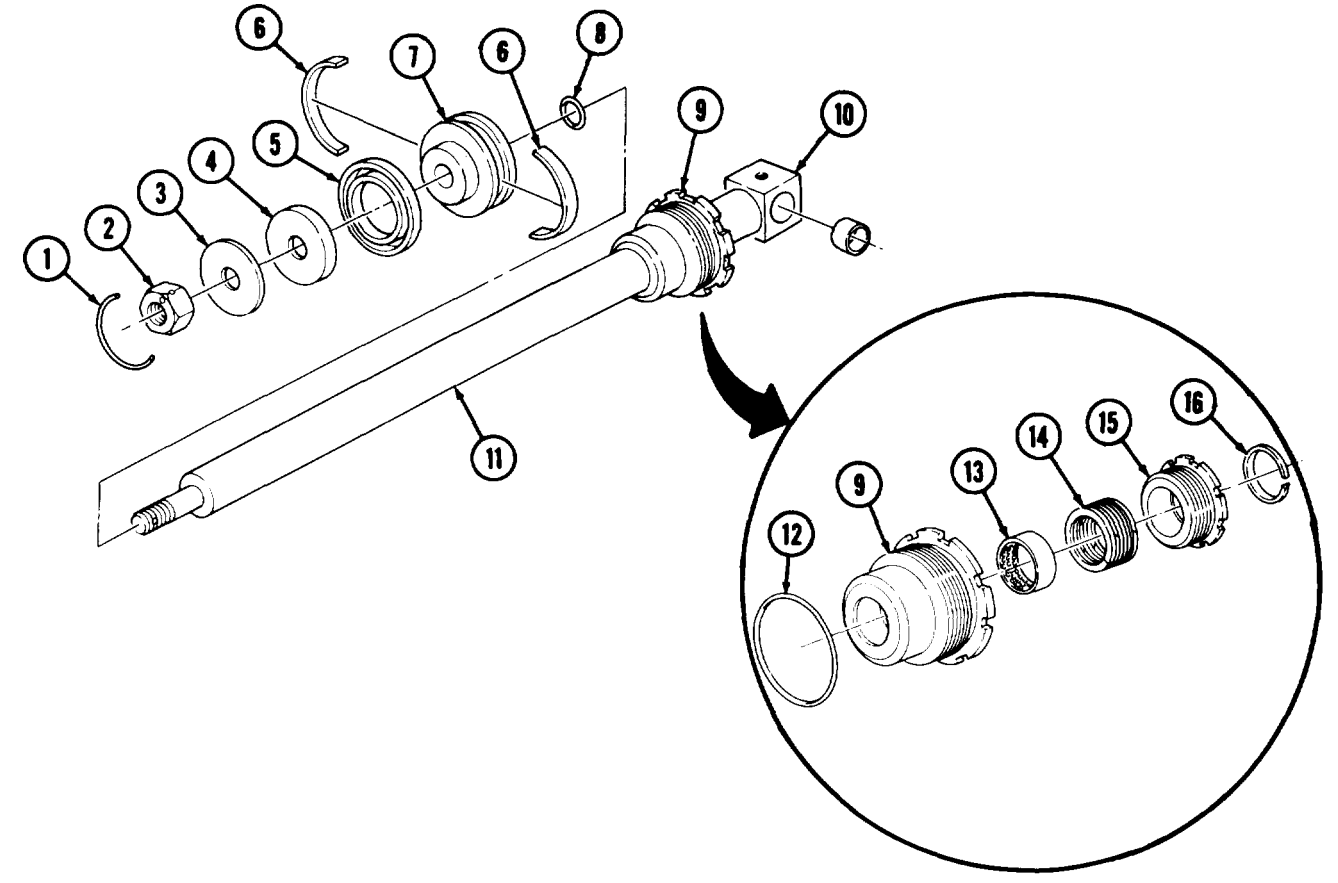

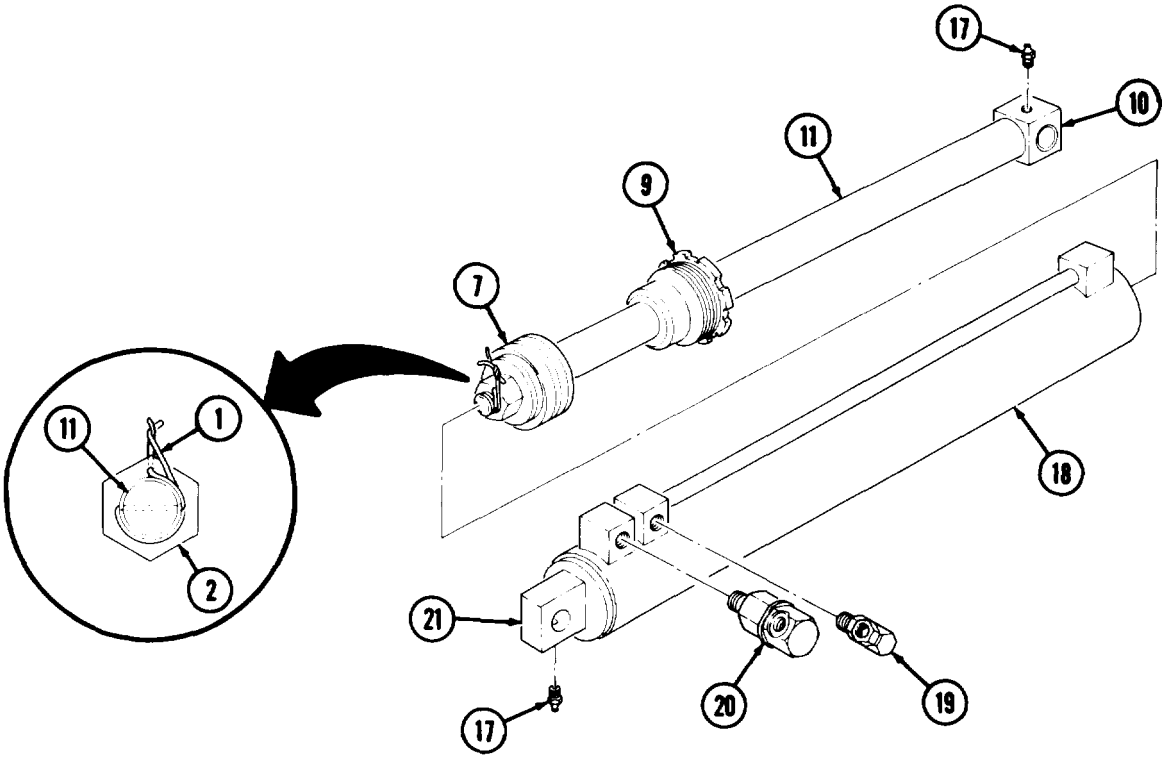

16-14. BOOM ELEVATING CYLINDERS MAINTENANCE (M816) (Contd)

e. Installation

WARNING

- All personnel must stand clear during lifting operations. A swinging or shifting load may cause injury to personnel.
- Ensure lifting capacity is greater than weight (160 lb (73 kg)) of boom elevating cylinders. Failure to do so may result in injury to personnel or damage to equipment.

NOTE

Assistant will help with installation task.

1. Install chain to elevating cylinder (2) and lifting device.
2. Raise elevating cylinder (2) and position on brackets (3) and (14).
3. Install cylinder housing trunnion (12) on bracket (14) with pin (15) and new cotter pin (13).
4. Install piston rod trunnion (8) on bracket (3) with keeper pin (4), washer (5), new lockwasher (6), and screw (7).
5. Remove lifting device and chain from elevating cylinder (2).
6. Wrap male threads of hoses (9) and elbows (1) and (11) with anti seize tape.
7. Connect hose (16) to elbow (11).
8. Connect hose (9) to check valve (10) and elbow (1).

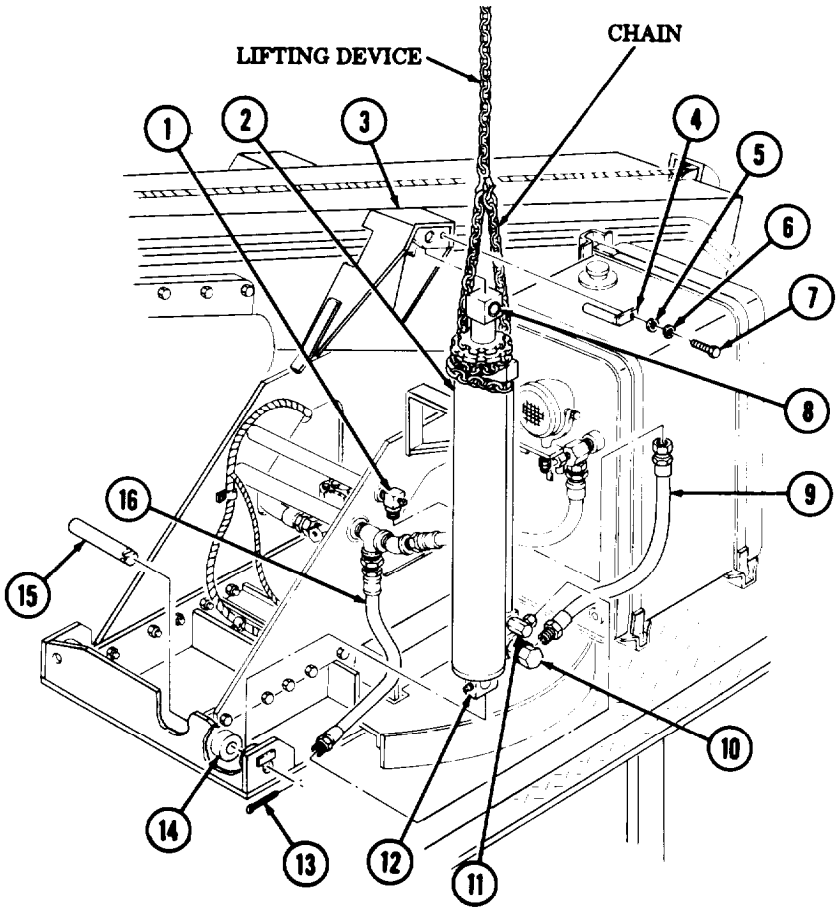

16-14. BOOM ELEVATING CYLINDERS MAINTENANCE (M816) (Contd)

9. Install chain on boom (17) and attach to lifting device.
10. Release shipper braces (18) from wrecker body (19) and install on boom (17).
11. Remove chain and lifting device from boom (17).

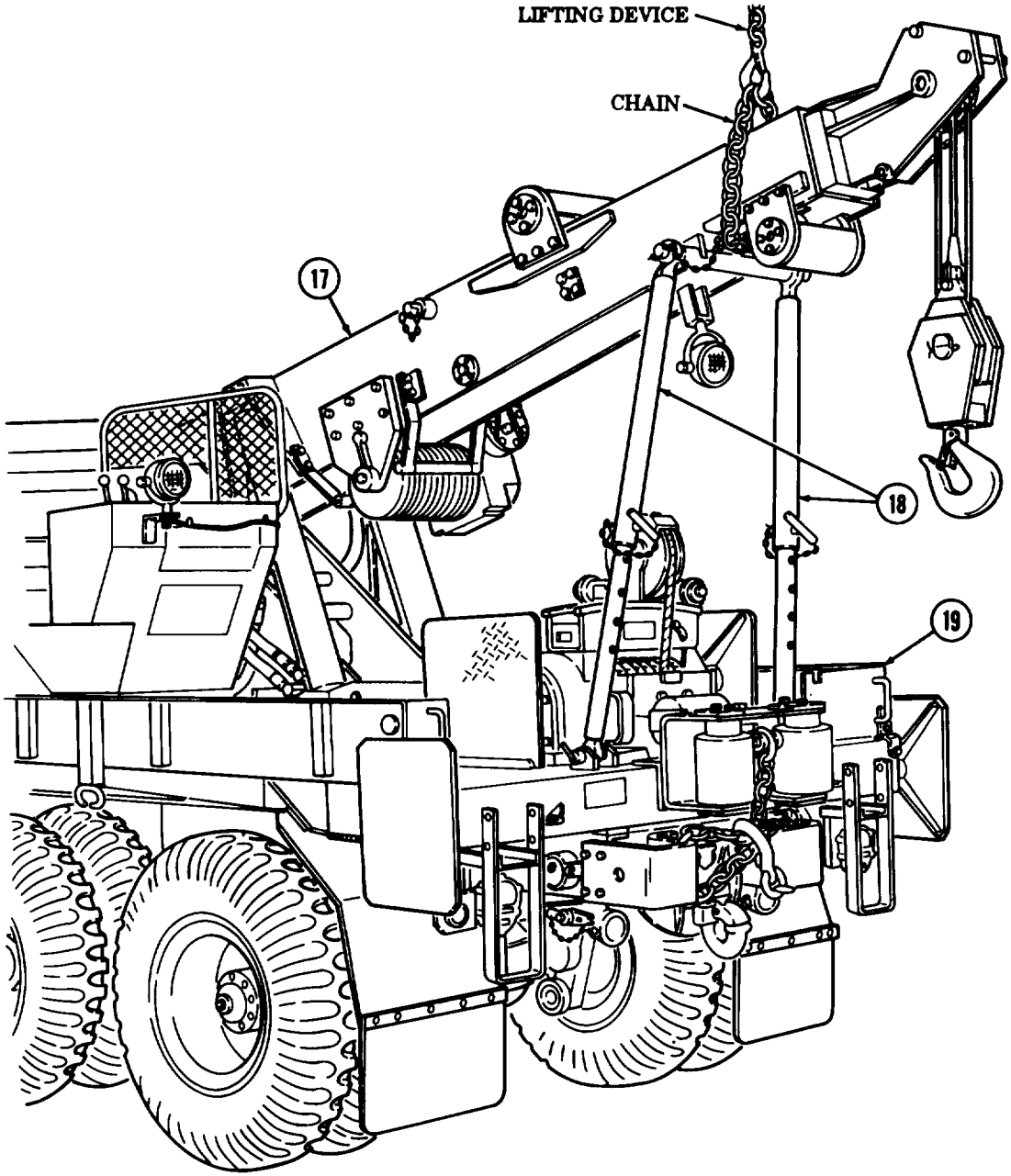

FOLLOW-ON TASKS:
- Start engine and check for leaks (TM 9-2320-260-10).
- Check crane operation (TM 9-2320-260-10).
- Install gondola guard (left elevating cylinder) (TM 9-2320-260-10).

16-15. HOIST WINCH MOTOR REPLACEMENT (M816)

THIS TASK COVERS:

a. Removal

b. Installation

INITIAL SETUP

APPLICABLE MODELS
M816

TOOLS
General mechanic's tool kit (Appendix B, Item 1)
1-1/2-in. open-end wrench (Appendix B, Item 125)

MATERIALS/PARTS
Locknut (Appendix D, Item 177)
Woodruff key (Appendix D, Item 561)
Gasket (Appendix D, Item 84)
Four lockwashers (Appendix D, Item 223)
Cap and plug set (Appendix C, Item 6)
Antiseize tape (Appendix C, Item 50)

REFERENCES (TM)
LO 9-2320-260-12
TM 9-2320-260-10
TM 9-2320-260-34P-2

EQUIPMENT CONDITION
Ž Parking brake set (TM 9-2320-260-10).
• Boom raised and supported (TM 9-2320-260-10).

GENERAL SAFETY INSTRUCTIONS
• All personnel must stand clear during lifting operations.
• Ensure lifting capacity is greater than weight of boom.

a. Removal

WARNING

• All personnel must stand clear during lifting operations. A swinging or shifting load may cause injury to personnel.
• Ensure lifting capacity is greater than weight (2820 lb (1280 kg)) of raised boom, Failure to do so may result in injury to personnel or damage to equipment.

CAUTION

• Clean area around hoses and lines before removal to prevent entry of dirt. Damage will occur if dirt or dust enters system.
• Cap or plug all openings immediately after disconnecting hoses to prevent contamination. Failure to do so may result in damage to hydraulic components.

NOTE

• Tag hoses and positions of fittings for installation.
Ž Have drainage container ready to catch oil.

1. Remove locknut (8) and clamp (7) from hoses (13) and (14) and boom (9). Discard locknut (8),
2. Disconnect hoses (13) and (14) from elbows (1) and (16).
3. Remove four screws (1 1), lockwashers (12), winch hydraulic motor (2), gasket (5), and coupling (6) from hydraulic winch (10). Discard lockwashers (12) and gasket (5).
4. Remove woodruff key (3) from shaft **(4)** of winch hydraulic motor (2). Discard woodruff key (3).
5. Remove elbows (1) and (16) from winch hydraulic motor (2).

16-15. HOIST WINCH MOTOR REPLACEMENT (M816) (Contd)

b. Installation

1. Wrap male threads on elbows (1) and (16) with antiseize tape.
2. Install elbows (1) and (16) on winch hydraulic motor (2).
3. Position coupling (6) on shaft (15) of hydraulic winch (10).
4. Install new woodruff key (3) on shaft (4) of winch hydraulic motor (2).
5. Install new gasket (5) and winch hydraulic motor (2) on hydraulic winch (10) with four new lockwashers (12) and screws (11).
6. Install hoses (13) and (14) on elbows (1) and (16).
7. Install clamp (7) on hoses (13) and (14) and boom (9) with new locknut (8).

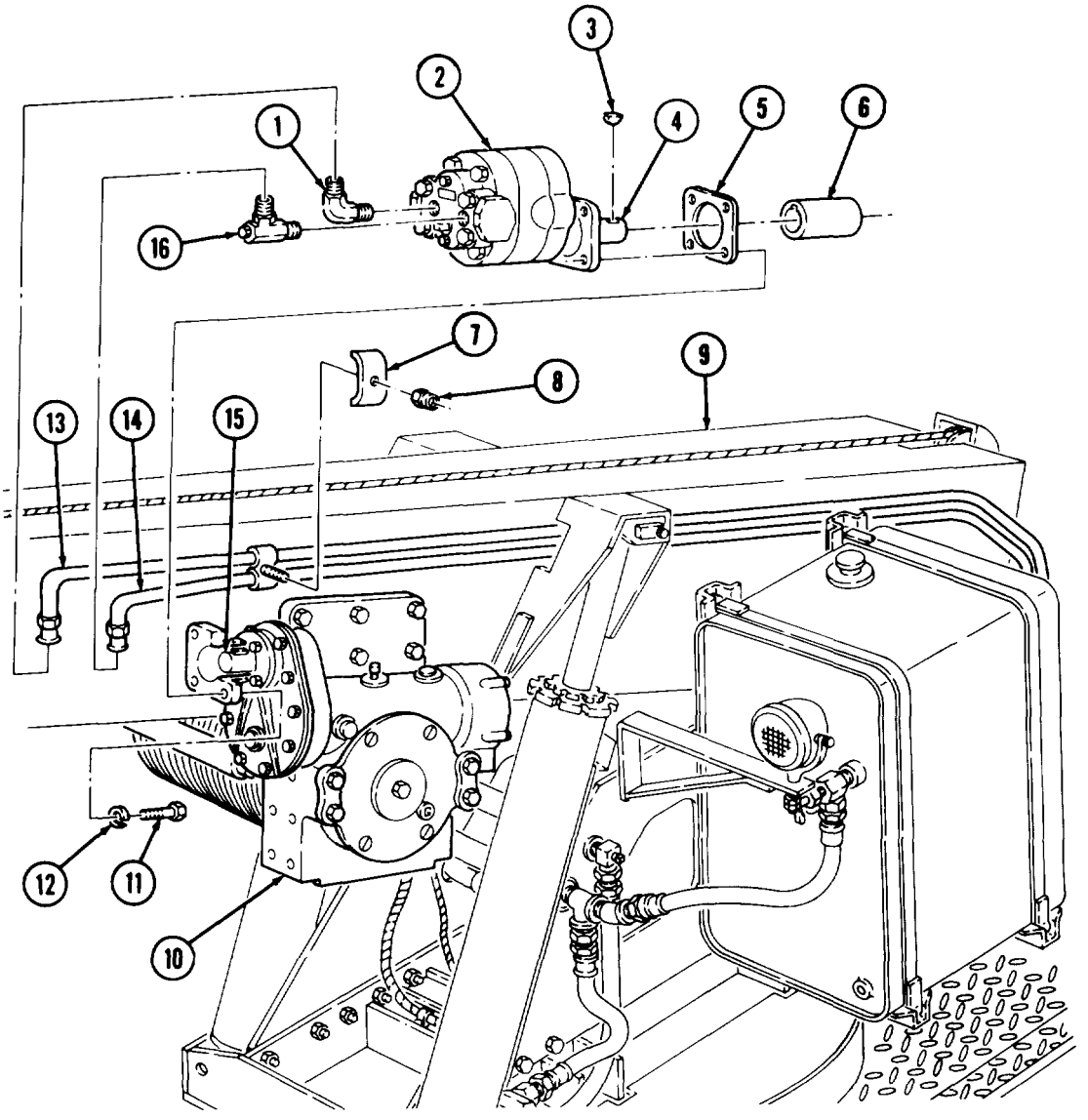

FOLLOW-ON TASKS: Ž Fill hydraulic oil reservoir (LO 9-2320-260-12).
• Start engine and check crane winch operation (TM 9-2320-260-10).

16-16. HOIST LEVEL WIND MAINTENANCE (M816)

THIS TASK COVERS:

a. Removal
b. Disassembly
c. Cleaning and Inspection
d. Assembly
e. Installation

INITAL SETUP

APPLICABLE MODELS
M816

TOOLS
General mechanic's tool kit (Appendix B, Item 1)
Mechanical puller kit (Appendix B, Item 14)
Arbor press (Appendix B, Item 7)
Inside micrometer (Appendix B, Item 9)

MATERIALS/PARTS
Sleeve bearing (Appendix D, Item 5)
Four locknuts (Appendix D, Item 170)

MATERIALS/PARTS (Contd)
Cotter pin (Appendix D, Item 49)
GM grease (Appendix C, Item 14)

REFERENCES (TM)
LO 9-2320-260-12
TM 9-2320-260-10
TM 9-2320-260-34P-2

EQUIPMENT CONDITION
Parking brake set (TM 9-2320-260-10).

a. Removal

NOTE

Front and rear level winds are maintained the same. This procedure covers the rear level wind.

Remove four locknuts (2), screws (9), and two brackets (4) from boom (1). Discard locknuts (2).

b. Disassembly

1. Remove grease fitting (8) from shaft (7).
2. Remove cotter pin (3), two brackets (4), and roller (5) from shaft (7). Discard cotter pin (3).

c. Cleaning and Inspection

1. For general cleaning instructions, refer to para. 2-8.
2. Inspect shaft (7) and roller (5) for bends, breaks, and wear. Replace shaft (7) and roller (5) if bent, broken, or worn.
3. Measure inside diameter of sleeve bearings (6). Replace sleeve bearings (6) if inside diameter exceeds 1.00 ± .003 in. (25.4 ± .08 mm) for steel or 1.005 ± .001 in. (25.53 ± .03 mm) for bronze.

NOTE

Perform steps 4 through 6 if sleeve bearing(s) require replacement.

4. Using puller, remove sleeve bearing(s) (6) from roller (5). Discard sleeve bearing(s) (6).
5. Coat new sleeve bearing(s) (6) with GAA grease.
6. Using arbor press, install sleeve bearing(s) (6) in roller (5).

16-16. HOIST LEVEL WIND MAINTENANCE (M816] (Contd)

d. Assembly

1. Apply a light coat of GAA grease on shaft (7).
2. Install roller (5) and two braces (4) on shaft (7) with new cotter pin (3).
3, Install grease fitting (8) on shaft (7).

e. Installation

Install two brackets (4) on boom (1) with four screws (9) and new locknuts (2).

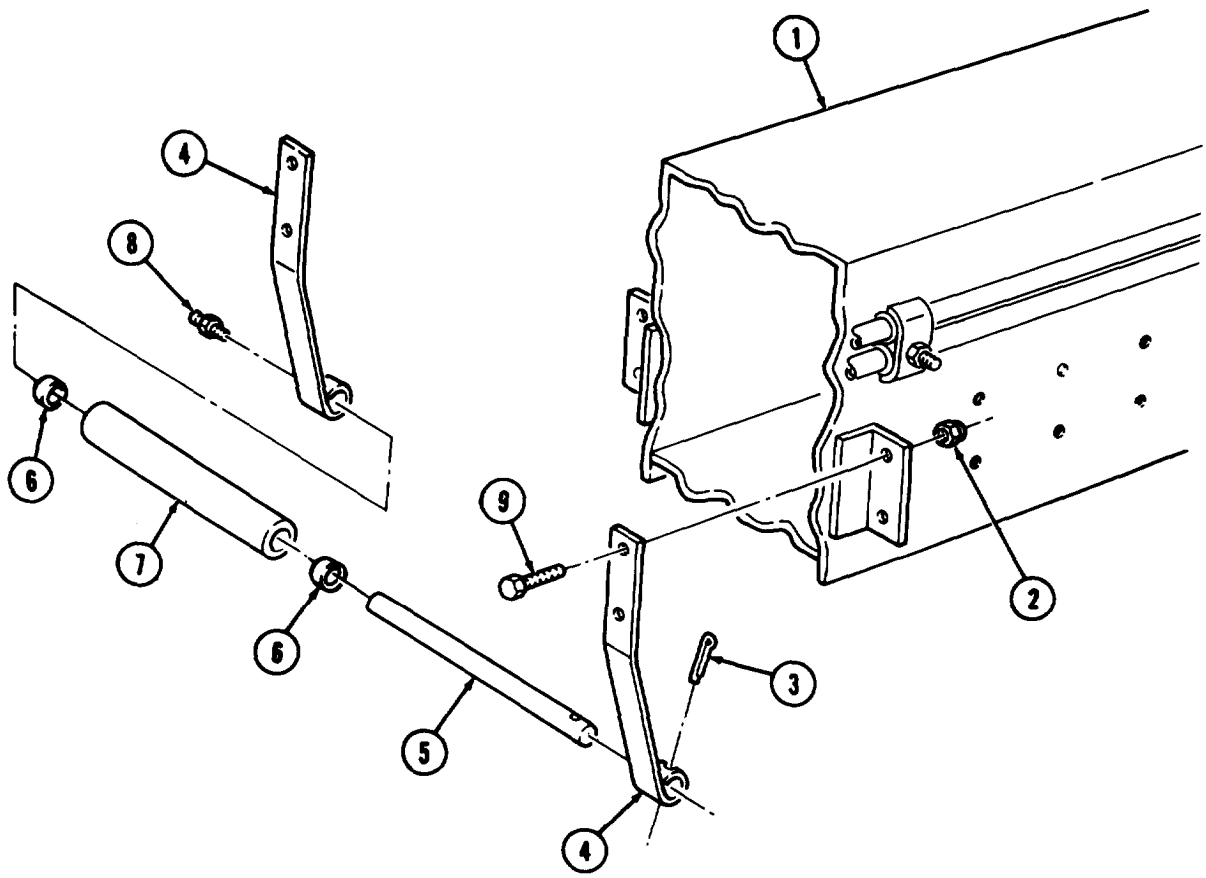

FOLLOW-ON TASK: Lubricate hoist level wind (LO 9-2320-260-12).

16-17. HOIST WINCH MAINTENANCE (M816)

THIS TASK COVERS:

a. Removal
b. Disassembly
c. Cleaning and Inspection
d. Assembly
e. Installation

INITIAL SETUP

APPLICABLE MODELS
M816

TOOLS
General mechanic's tool kit (Appendix B, Item 1)
Mechanical puller kit (Appendix B, Item 14)
Inside micrometer (Appendix B, Item 9)
Outside micrometer (Appendix B, Item 8)
Dial indicator (Appendix B, Item 11)
Soft-head hammer (Appendix B, Item 47)
Chain
Lifting device

MATERIALS/PARTS
Ten lockwashers (Appendix D, Item 247)
Fifteen lockwashers (Appendix D, Item 223)
Twelve lockwashers (Appendix D, Item 218)
Gasket (Appendix D, Item 90)
Gasket (Appendix D, Item 112)
Gasket (Appendix D, Item 95)
Gasket (Appendix D, Item 97)
Two seals (Appendix D, Item 427)
Seal (Appendix D, Item 464)
Shim (Appendix D, Item 493)
Four woodruff keys (Appendix D, Item 544)
Woodruff key (Appendix D, Item 554)
Woodruff key (Appendix D, Item 563)

MATERIALS/PARTS (Contd)
Woodruff key (Appendix D, Item 561)
Six screw-assembled lockwashers (Appendix D, Item 382)
Gear lubricating oil (Appendix C, Item 22)
GAA grease (Appendix C, Item 14)

REFERENCES (TM)
LO 9-2320-260-12
TM 9-2320-260-10
TM 9-2320-260-20
TM 9-2320-260-34P-2

EQUIPMENT CONDITION
- Hoist gear reducer and hoist gearcase oil drained (LO 9-2320-260-12).
- Hoist winch cable removed (TM 9-2320-260-20).
- Floodlight wiring harness removed (TM 9-2320-260-20).
- Hoist winch motor removed (para. 16-15).
- Hoist level wind removed (para. 16-16).

GENERAL SAFETY CONDITIONS
- All personnel must stand clear during lifting operations.
- Ensure lifting capacity is greater than weight of hoist winch.

a. Removal

1. Position chain around hoist winch (4) and attach to lifting device. Take up tension in chain.

WARNING

- All personnel must stand clear during lifting operations. A swinging or shifting load may cause injury to personnel.
- Ensure lifting capacity is greater than weight (400 lb (182 kg)) of hoist winch. Failure to do so may result in injury to personnel or damage to equipment.

NOTE
Assistant will help with steps 2 and 3.

2. Remove twelve screws (3), lockwashers (2), and hoist winch (4) from boom (1). Discard lockwashers (2).
3. Lower hoist winch (4) from boom (1) and remove hoist winch (4) from vehicle.
4. Remove lifting device and chain from hoist winch (4).

16-17. HOIST WINCH MAINTENANCE (M816) (Contd)

1. Remove four screws (5) and lockwashers (6), adapter (27), and gasket (7) from cover (26). Discard lockwashers (6) and gasket (7).
2. Remove woodruff key (9) from input shaft (10). Discard woodruff key (9).
3. Remove ten screws (24), lockwashers (25), cover (26), and gasket (11) from housing (16). Discard lockwashers (25) and gasket (11).
4. Remove bearing (12) from cover (26).
5. Remove input shaft gear (8) and input shaft (10) from housing (16).
6. Remove input shaft gear (8) from input shaft (10).
7. Remove snapring (19) from wormshaft (23).
8. Using puller, remove drive gear (20) from wormshaft (23).
9. Remove woodruff key (13) from wormshaft (23). Discard woodruff key (13).
10. Remove four screws (18), lockwashers (17), housing (16), and gasket (15) from gearcase (14). Discard lockwashers (17) and gasket (15).
11. Remove bearing (21) and seal (22) from housing (16). Discard seal (22).

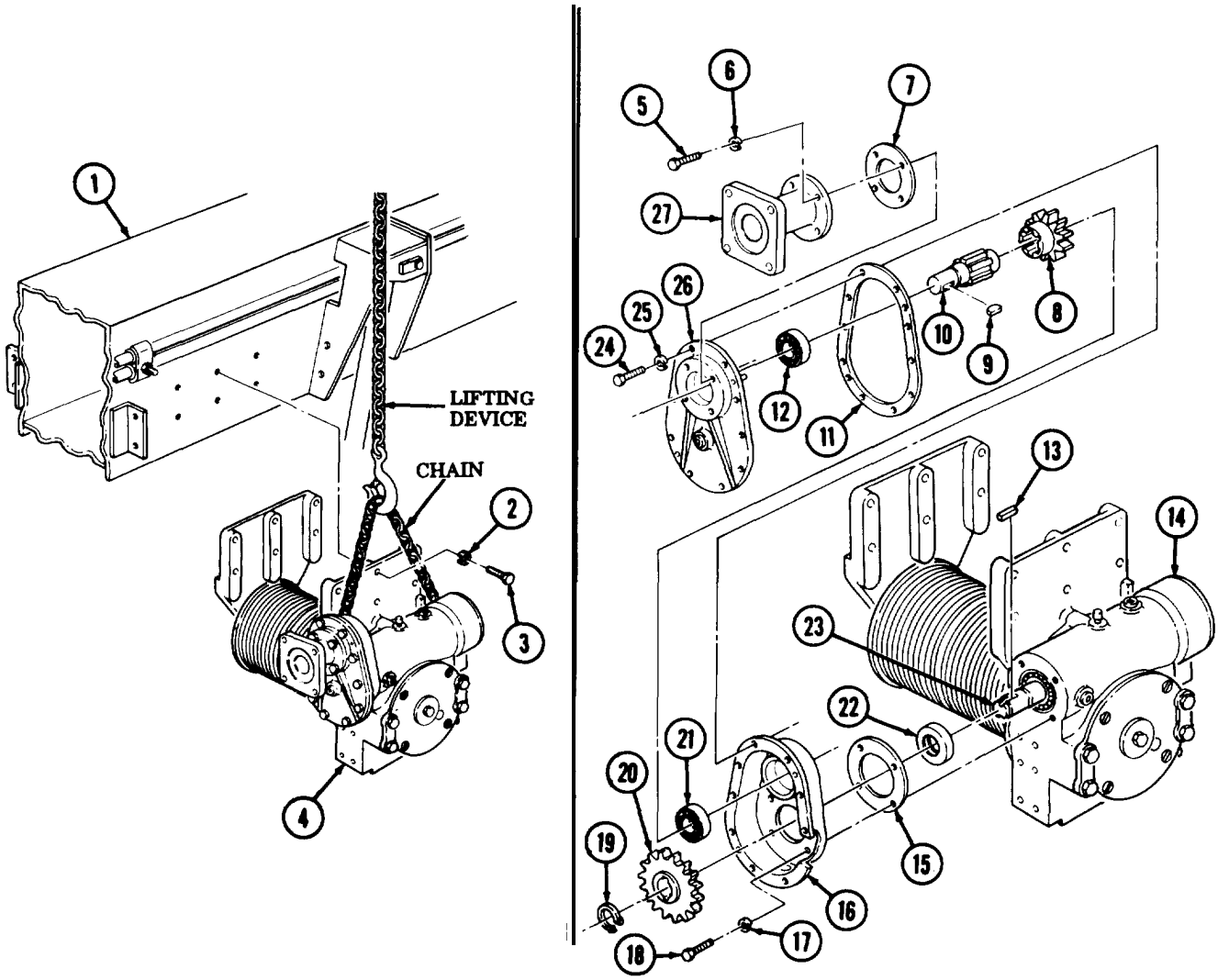

16-17. HOIST WINCH MAINTENANCE (M816) (Contd)

NOTE

Record thickness of shim(s) for assembly.

12. Remove screw (6), lockwasher (7), washer (5), shim(s) (8), and bracket (9) from drum shaft (2). Discard shim(s) (8) and lockwasher (7).
13. Remove thrust washer (10) and drum (11) from drum shaft (2).
14. Remove two woodruff keys (4) and thrust washer (12) from drum shaft (2). Discard woodruff keys (4).
15. Remove screw (13), plate (14), and gasket (3) from drum shaft (2) and gearcase (1). Discard gasket (3).
16. Remove six screw-assembled lockwashers (26), cover (27), and gasket (28) from brake housing (25). Discard screw-assembled lockwashers (26) and gasket (28).
17. Remove screw (31), washer, (32), seal (33), spring (30), and brake band (29) from brakedrum (18) and brake housing (25). Discard seal (33).
18. Remove screw (15), lockwasher (16), and washer (17) from brakedrum (18) and wormshaft (22).
19. Using puller, remove brakedrum (18) from worm shaft (22) and brake housing (25).
20. Remove woodruff key (23) from worm shaft (22). Discard woodruff key (23).

NOTE

Mark brake housing and gearcase for assembly.

21. Remove four screws (19) and lockwashers (20), brake housing (25), and gasket (21) from gearcase (1). Discard lockwashers (20) and gasket (21).
22. Remove seal (24) from brake housing (25). Discard seal (24).

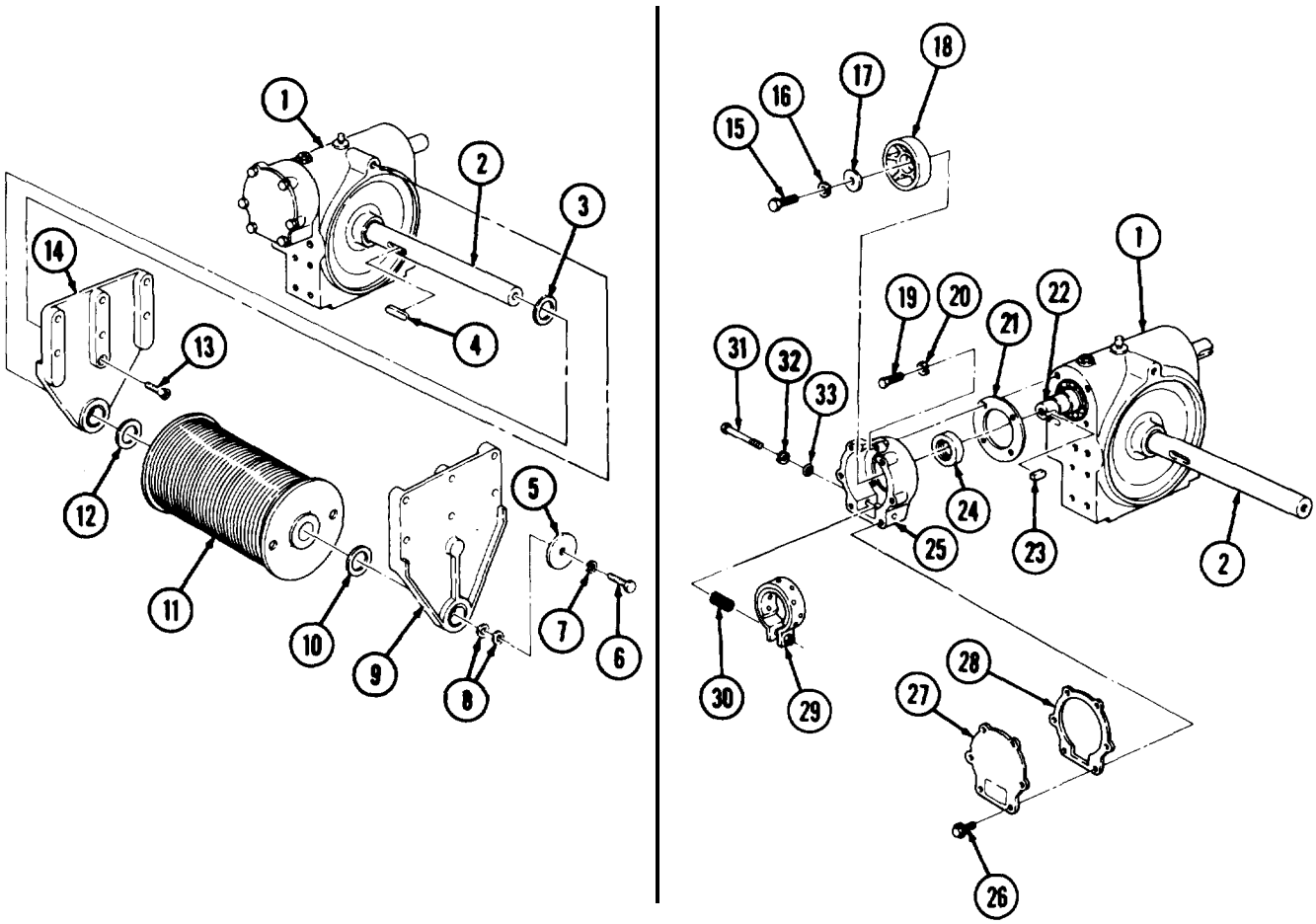

16-17. HOIST WINCH MAINTENANCE (M816) (Contd)

23. Using soft-head hammer, tap on end of wormshaft (34) to drive bearing (35) from bore of gearcase (1).
24. Using puller, remove bearing (35) from wormshaft (34).
25. Aline bearing (47) with bore of gearcase (1). Using softhead hammer, tap opposite end of worm shaft (34) and remove wormshaft (34) with bearing (47) from gearcase (1).
26. Use puller or arbor press to remove bearing (47) from wormshaft (34).
27. Remove screw (44), lockwasher (43), and washer (42) from drum shaft (2) and cover (37). Discard lockwasher (43).
28. Remove four screws (39) and lockwashers (40), screws (38), cover (37), and gasket (36) from gearcase (1). Discard lockwashers (40) and gasket (36).
29. Remove seal (41) from cover (37). Discard seal (41).
30. Using softhead hammer, tap on drum end of drum shaft (2) to remove drum shaft (2) and worm gear (45) from gearcase (1).
31. Using arbor press, remove worm gear (45) from drum shaft (2).
32. Remove two woodruff keys (46) from drum shaft (2). Discard woodruff keys (46).

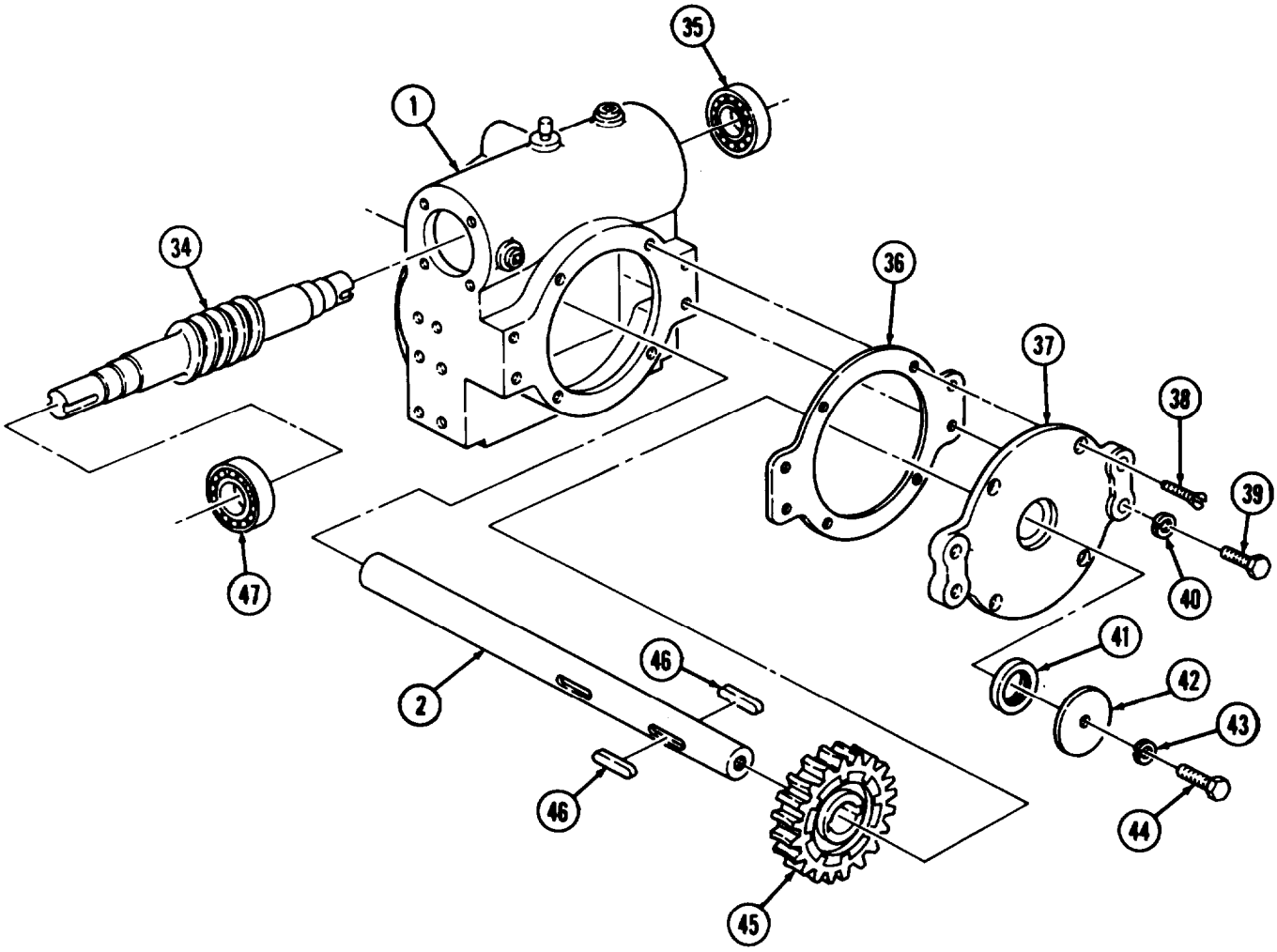

16-17. HOIST WINCH MAINTENANCE (M816) (Contd)

c. Cleaning and Inspection

1. For general cleaning instructions, refer to para. 2-8.
2. For general inspection instructions, refer to para. 2-9.
3. Inspect drum shaft (3), input shaft(s), and wormshafts (4) for bends, cracks, breaks, chips, and wear. Refer to table 16-12, Hoist Winch Wear Limits, for measurements. Replace drum shaft (3), input shaft (5), and wormshaft (4) if damaged or worn.
4. Inspect drum (9), cover (7), gearcase (6), bracket (2), and plate (1) for cracks, bends, damaged threads, and wear. Refer to table 16-12, Hoist Winch Wear Limits, for measurements. Replace drum (9), cover (7), gearcase (6), bracket (2), and plate (1), if damaged or worn.
5. Inspect gearcase bearings (7) and thrust washers (10) for wear. Refer to table 16-12, Hoist Winch Wear Limits, for measurements, Replace gearcase bearings (8) and thrust washers (10) if worn.
6. Inspect worm gear (11) and input shaft gear (12) for cracks, nicks, burrs, ridged, chipped, broken teeth, or particles in teeth of worm gear (11). Refer to table 16-12, Hoist Winch Wear Limits, for measurements. Replace worm gear (11) and input shaft gear (12), if damaged or worn.

Table 16-12. Hoist Winch Wear Limits.

ITEM NO.	ITEM/POINT OF MEASUREMENT	WEAR LIMITS/TOLERANCES	
		INCHES	MILLIMETERS
1,2	Shaft support (2)		
	Inner diameter – bushing – maximum	2.130	54.10
3	Drum shaft		
	Outer diameter – four places – minimum	2.123	53.92
4	Wormshaft		
	Outer diameter – bearing journal – minimum	1.771	44.98
	Outer diameter – sealing surface – minimum	1.765	44.83
5	Input shaft – outer diameter – minimum	1.746	43.35
6	Gearcase		
	Inner diameter – bushing – maximum	2.130	54.10
	Width – cover edge to hub	4.469	113.51
	Inner diameter – bearing bores (2) – maximum	3.937	100.00
7	Cover		
	Inner diameter – bushing – maximum	2.130	54.10
	Width – bushing hub – minimum	2.000	50.8
8	Bearings (2)		
	Inner diameter – inner race – maximum	1.771	44.98
	Outer diameter – outer race – minimum	3.936	99.97
9	Drum - outer diameter – minimum	4.992	126.80
10	Thrust washers (2) – thickness – minimum	0.062	1.57
11	Worm gear – width – hub - minimum	2.492	63.30
12	Input shaft gear	1.88	47.75

16-17. HOIST WINCH MAINTENANCE (M816) (Contd)

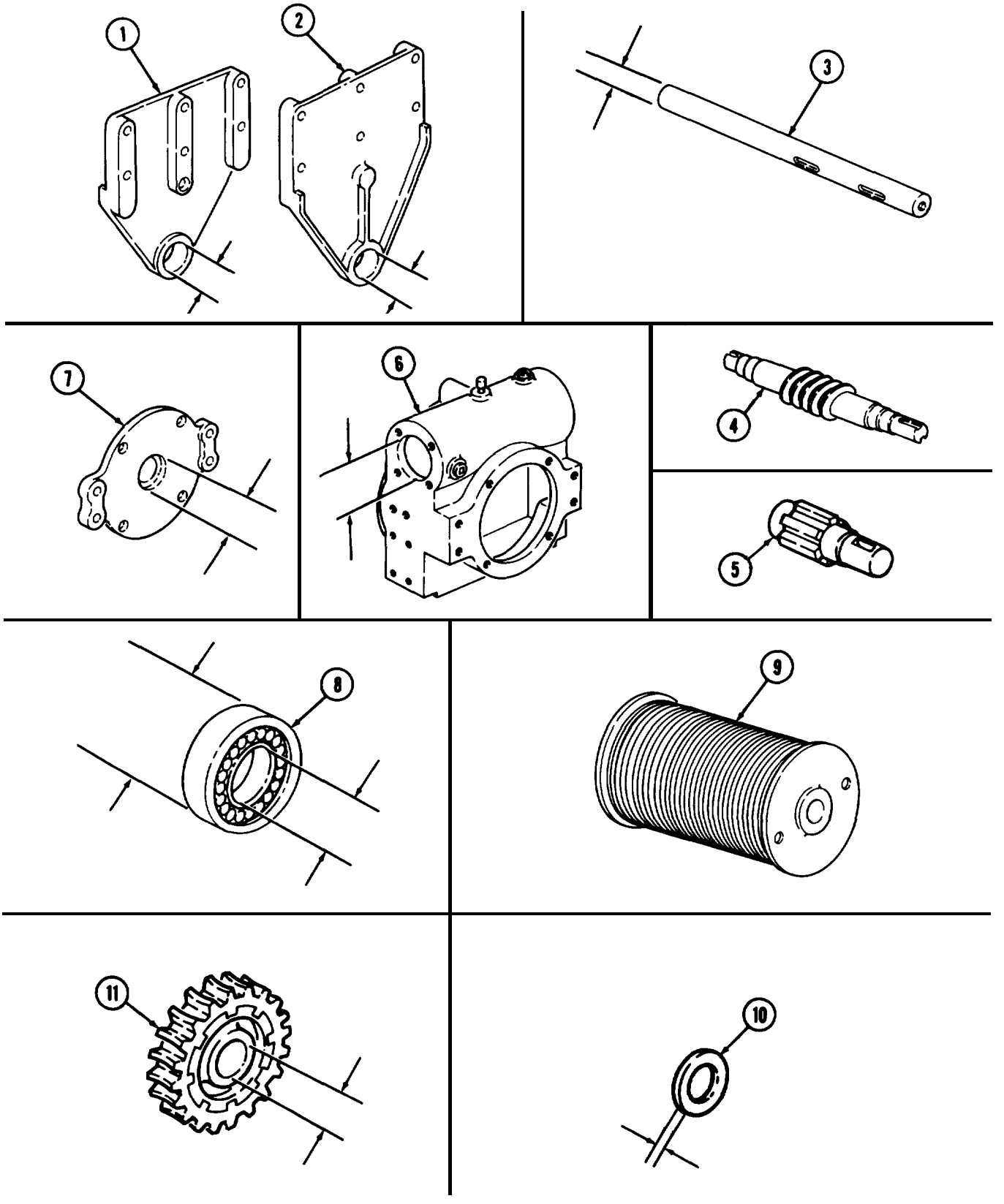

16-17. HOIST WINCH MAINTENANCE (M816) (Contd)

d. Assembly

NOTE

- Coat all internal hoist winch parts with lubrication oil before installation.
- Coat inside lips of seals with GAA grease before installation.

1. Install two new woodruff keys (14) on drum shaft (15).
2. Using arbor press, install drum shaft (15) in worm gear (13) until drum shaft (15) extends 2.50 in. (63.5 mm) from face of hub.
3. Insert drum shaft (15) through gearcase (2) until hub is seated.
4. Using arbor press, install bearing (16) on worm shaft (1). Ensure bearing (16) seats on shoulder of wormshaft (1).
5. Insert wormshaft (1) into gearcase (2).
6. Using arbor press, install bearing (3) into bore of gearcase (2) until seated on shoulder of worm-shaft (1), flush with face of gearcase.
7. Install dial indicator on gearcase (2), and measure backlash of worm gear (13) and worm shaft (1). Backlash should be 0.006-0.010 in. (0. 15-0.25 mm). Replace worm gear (13) if backlash is not within limits.
8. Using arbor press, install new seal (9) in cover (5).
9. Install new gasket (4) and cover (5) on gearcase (2) with four screws (6), new lockwashers (8), and screws (7).
10. Install washer (10) and new lockwasher (12) on cover (5) and drum shaft (15) with screw (11).
11. Install dial indicator on gearcase (2).
12. Check end play of drum shaft (15).
    a. End play should be 0.005-0.015 in. (0,13-0.38 mm).
    b. If end play is less than 0.005 in. (O. 13 mm), remove cover (5) and remove gasket(s) (4). Recheck end play.
    c. If end play is more than 0.015 in. (0.38 mm), remove cover (5) and add gasket(s) (4). Install cover (5) on drum shaft (15) and recheck end play.

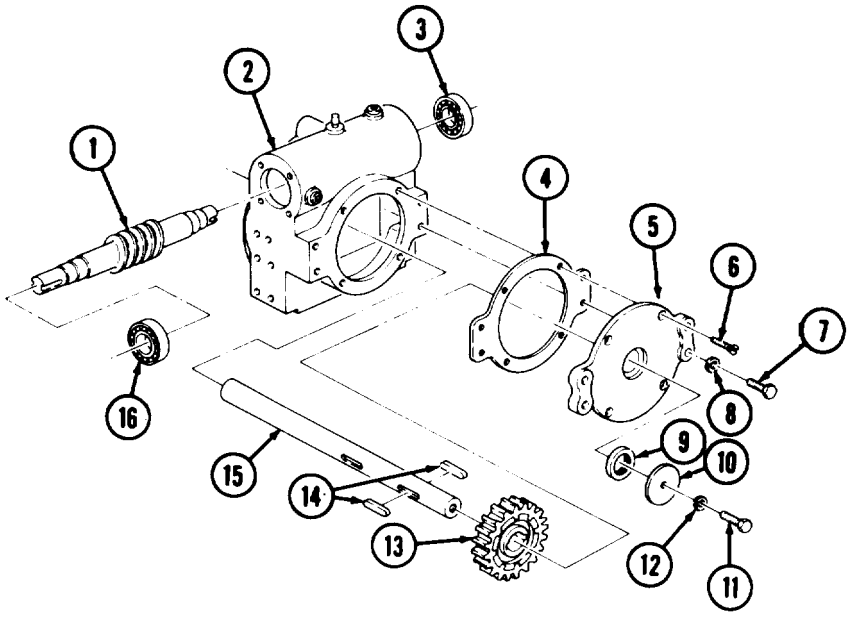

16-17. HOIST WINCH MAINTENANCE (M816) (Contd)

13. Install new seal (25) in brake housing (26),
14. Install new gasket (23) and brake housing (26) on gearcase (2) with four new lockwashers (22), and screws (21).
15. Install new woodruff key (24) on worm shaft (1).
16. Install brakedrum (20) on wormshaft (1) with washer (19), new Iockwashers (18), and screw (17).
17. Install brake band (30) and spring (31) on brake housing (26) and brakedrum (20) with new seal (34), washer (33), and screw (32).
18. Install new gasket (29) and cover (28) on brake housing (26) with six new screw-assembled lockwashers (27).
19. Install new gasket (35) and plate (46) on gearcase (2) and drum shaft (15) with screw (45).
20. Install two new woodruff keys (36) on drum shaft (15).
21. Install thrust washer (44) and drum (43) on drum shaft (15). Tap with soft-head hammer to seat drum (43) against thrust washer (44) on plate (46).

NOTE

Ensure shims are installed to prerecorded thickness.

22. Install thrust washer (42), bracket (41), and shim(s) (40) on drum shaft (15) with washer (37), new lockwashers (39), and screw (38).

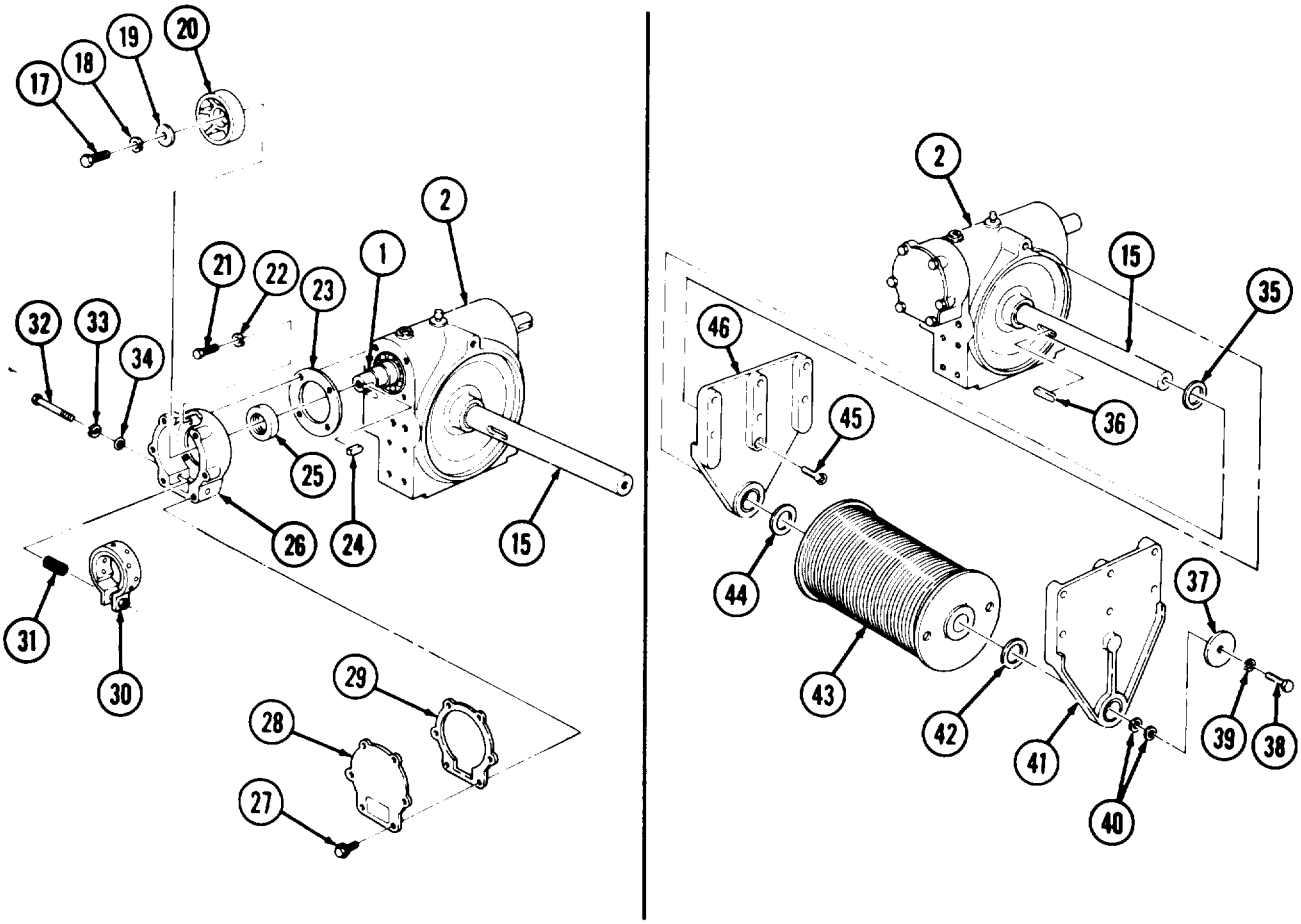

16-17. HOIST WINCH MAINTENANCE (M816) (Contd)

23. Install new seal (18) and bearing (17) on housing (12).
24. Install new gasket (11) and housing (12) on gearcase (10) with four new lockwashers (13) and Screws (14).
25. Install new woodruff key (9) in wormshaft (19).
26. Using puller, install drive gear (16) on wormshaft (19).
27. Install snapring (15) on wormshaft (19).
28. Install input shaft gear (4) on input shaft (6).
29. Install input shaft (6) and input shaft gear (4) on housing (12).
30. Install bearing (8) on cover (20).
31. Install new gasket (7) and cover (20) on housing (12) with ten new lockwashers (22) and screws (21).
32. Install new woodruff' key (5) in input shaft (6).
33. Install new gasket (3) and adapter (23) on cover (20) with four new lockwashers (2) and screws (1).

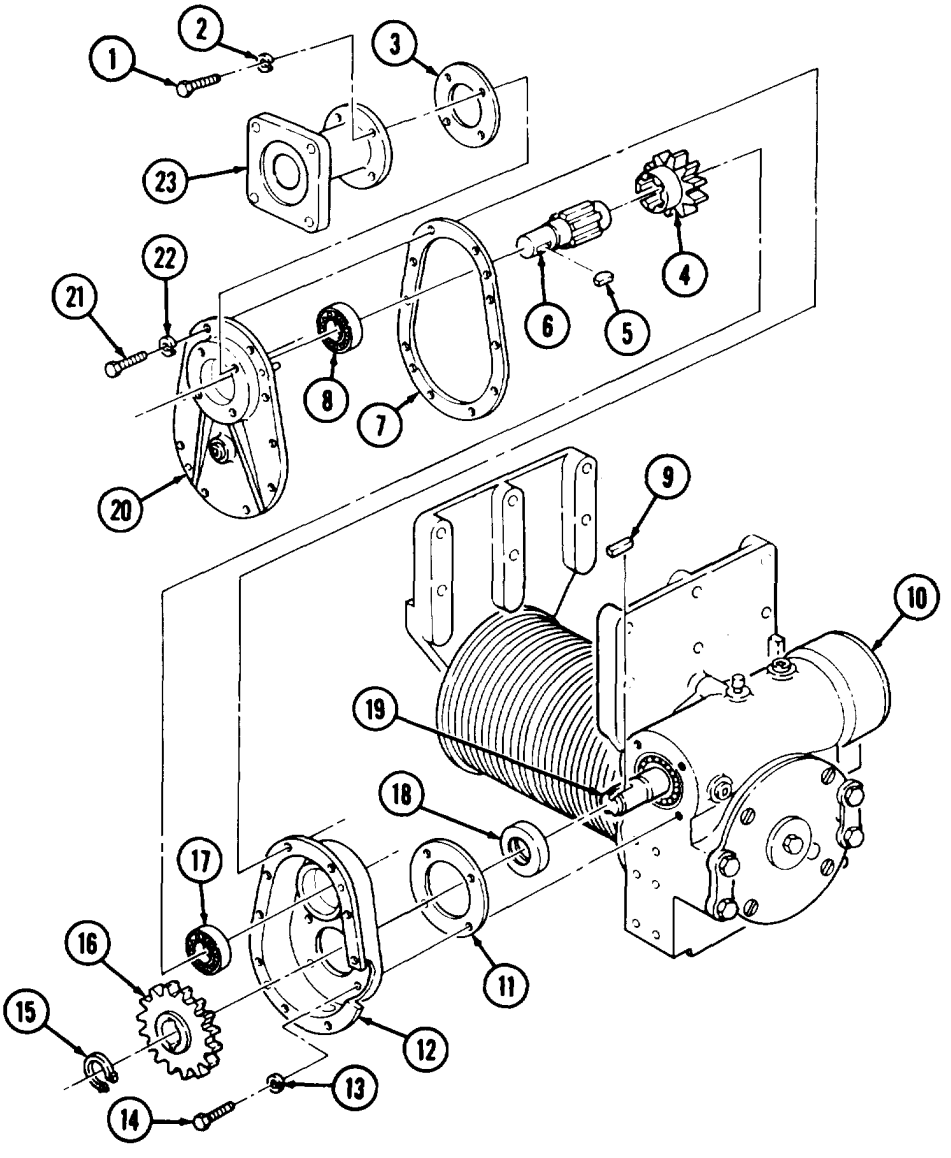

16-17. HOIST WINCH MAINTENANCE (M816) (Contd)

e. Installation

1. Install chain on hoist winch (27) and attach to lifting device.

WARNING

- All personnel must stand clear during lifting operations. A swinging or shifting load may cause injury to personnel.
- Ensure lifting capacity is greater than weight (400 lb (182 kg)) of hoist winch. Failure to do so may result in injury to personnel or damage to equipment.

NOTE

Assistant will help with steps 2 and 3.

2. Raise hoist winch (27) and position on boom (24).
3. Install hoist winch (27) on boom (24) with twelve new lockwashers (25) and screws (26).

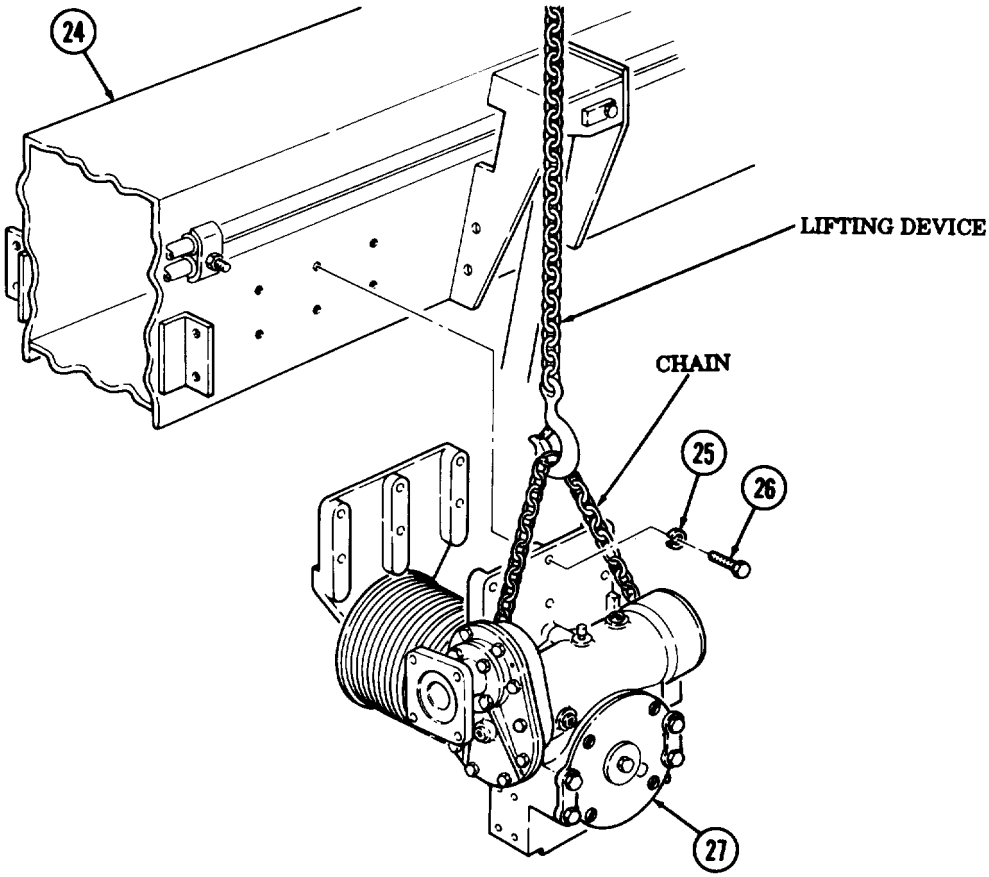

FOLLOW-ON TASKS:
- Install hoist level wind (para. 16-16).
- Install hoist winch motor (para. 16-15).
- Install floodlight wiring harness (TM 9-2320-260-20).
- Fill gear reducer and hoist winch gearcase with gear oil (LO 9-2320-260-12).
- Start engine and check hoist winch operation (TM 9-2320-260-10).
- Install hoist winch cable (TM 9-2320-260-20).

16-18. BOOM ASSEMBLY REPLACEMENT (M816)

THIS TASK COVERS:

a. Removal **b. Installation**

INITIALSETUP

APPLICABLE MODELS
M816

TOOLS
General mechanic's tool kit (Appendix B, Item 1)
3/4-in. torque wrench (Appendix B, Item 2)
1-5/8-in. socket, 3/4-in. dr. (Appendix B, Item 102)
1-718-in. socket, 3/4-in. dr. (Appendix B, Item 135)
Torque multiplier
Blocking
Two chains
Lifting device
Guide lines

MATERIALS/PARTS
Two lockwashers (Appendix D. Item 223)
Locknut (Appendix D, Item 202)
GM grease (Appendix C, Item 14)
Antiseize tape (Appendix C, Item 50)
Cap and plug set (Appendix C, Item 6)

PERSONNEL REQUIRED
Two

REFERENCES (TM)
LO 9-2320-260-12
TM 9-2320-260-10
TM 9-2320-260-20
TM 9-2320-260-34P-2

EQUIPMENT CONDITION
- Hydraulic reservoir drained (LO 9-2320-260-12).
- Hoist winch cable removed (TM 9-2320-260-20).
- Operator guard removed (TM 9-2320-260-20).
- Pioneer tool bracket removed (TM 9-2320-260-20).
- Floodlight housing and mount removed (TM 9-2320-260-20).

GENERAL SAFETY INSTRUCTIONS
- All personnel must stand clear during lifting operations.
- Keep hands clear during removal and installation of boom.
- Ensure lifting capacity is greater than weight of boom assembly.

a. Removal

WARNING

- All personnel must stand clear during lifting operations. A swinging or shifting load may cause injury to personnel.
- Ensure lifting capacity is greater than weight of boom assembly. Failure to do so may result in injury to personnel or damage to equipment.

NOTE

Two assistants will help with this procedure.

1. Install chain on boom (1) and attach to lifting device.
2. Wrap second chain around lower boom roller (4) and inner boom (3) to hold inner boom (3) in position.
3. Raise boom (1) to remove weight from shipper braces (2).
4. Remove two safety pins (5) and shipper braces (2) from boom (1).
5. Remove two safety pins (6), pins (8), and shipper braces (2) from brackets (7).

16-18. BOOM ASSEMBLY REPLACEMENT (M816) (Contd)

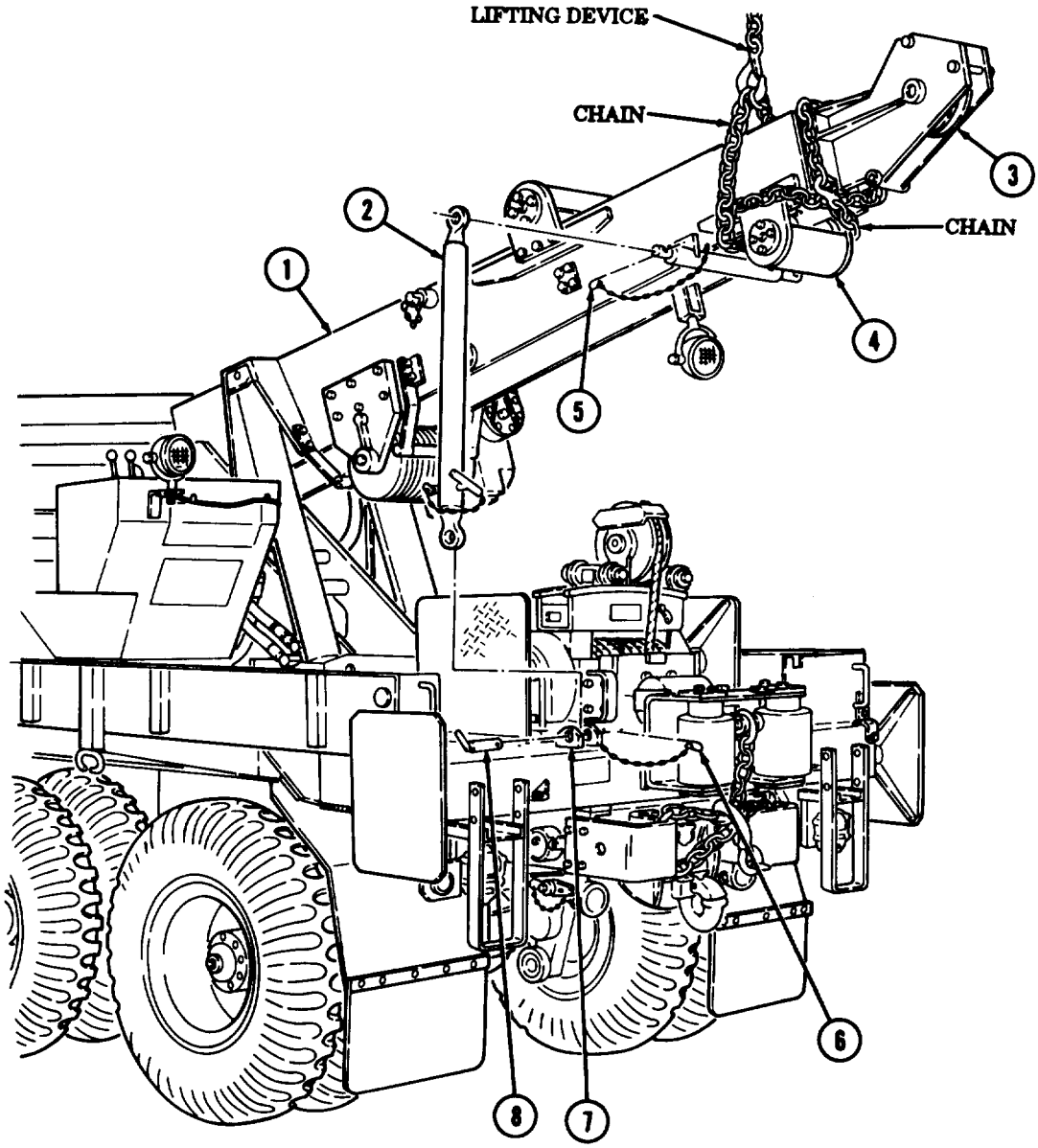

16-18. BOOM ASSEMBLY REPLACEMENT (M816) (Contd)

CAUTION

- Clean area around hoses and lines before removal to prevent entry of dirt. Damage will occur if dirt or dust enters system.
- Cap or plug all openings immediately after disconnecting lines and hoses to prevent contamination. Remove caps or plugs prior to installation. Failure to do so may result in damage to equipment.

NOTE

- Tag all lines and hoses for installation.
- Have drainage container ready to catch hydraulic fluid.

6. Disconnect two hoses (4) from lines (1).
7. Disconnect two hoses (3) from elbows (2).
8. Install two chains on brackets (6) and boom (5) and attach to lifting device.
9. Remove two screws (9), lockwashers (8), washers (10), keeper pins (7), and elevating cylinders (11) from brackets (6) and boom (5). Discard lockwashers (8).
10. Remove two grease fittings (12) and locknut (15) from shaft pin (13). Discard locknut (15).

NOTE

It may be necessary to adjust lifting device to remove weight from boom during step 11.

11. Using hammer and drift, remove shaft pin (13) and sheave (16) from boom (5) and boom support (14).

WARNING

- All personnel must stand clear during lifting operations. A swinging or shifting load may cause injury to personnel.
- Keep hands clear of boom and boom support when removing boom.
- Use pry bar to maneuver boom from position. Failure to do so may cause injury to personnel.
- Ensure lifting capacity is greater than weight (2850 lb (1300 kg)) of boom assembly. Failure to do so may result in injury to personnel or damage to equipment.

12. Install guide line around inner boom (17).
13. Direct three assistants to support elevating cylinders (11) and guide line.
14. Raise boom (5) from boom support (14) and elevating cylinders (11). Direct assistants to lower elevating cylinders (11) and step away from vehicle.

NOTE

Ensure blocking is high enough to allow removal of hoist winch, if necessary.

15. Remove boom (5) from vehicle, and position on blocking.
16. Remove lifting device and chains from boom (5).
17. Remove guide line and chain from inner boom (17) and boom (5).

16-18. BOOM ASSEMBLY REPLACEMENT (M816) (Contd)

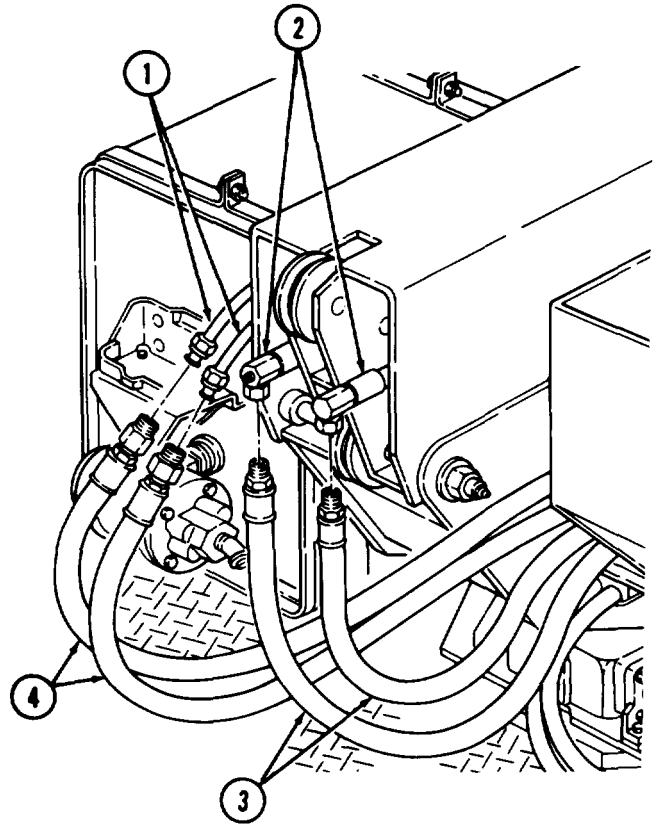

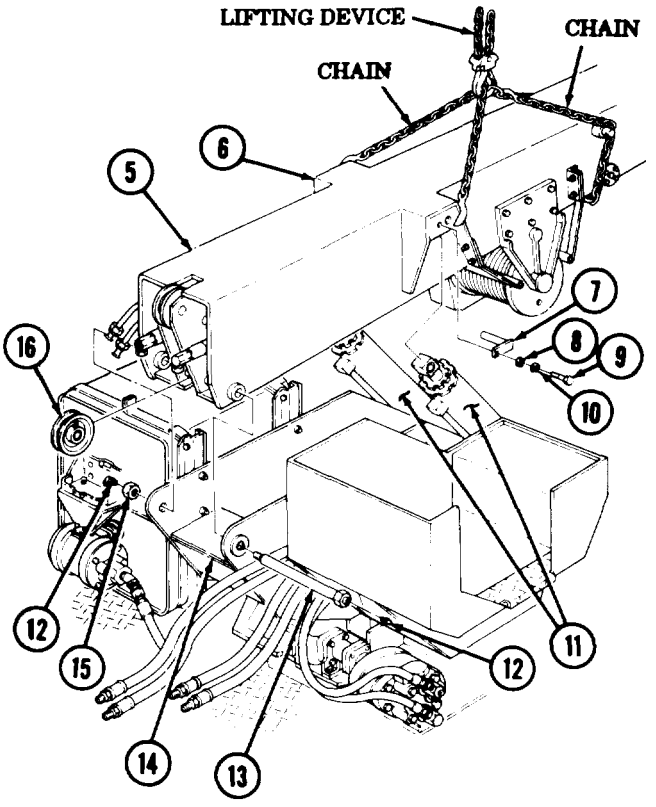

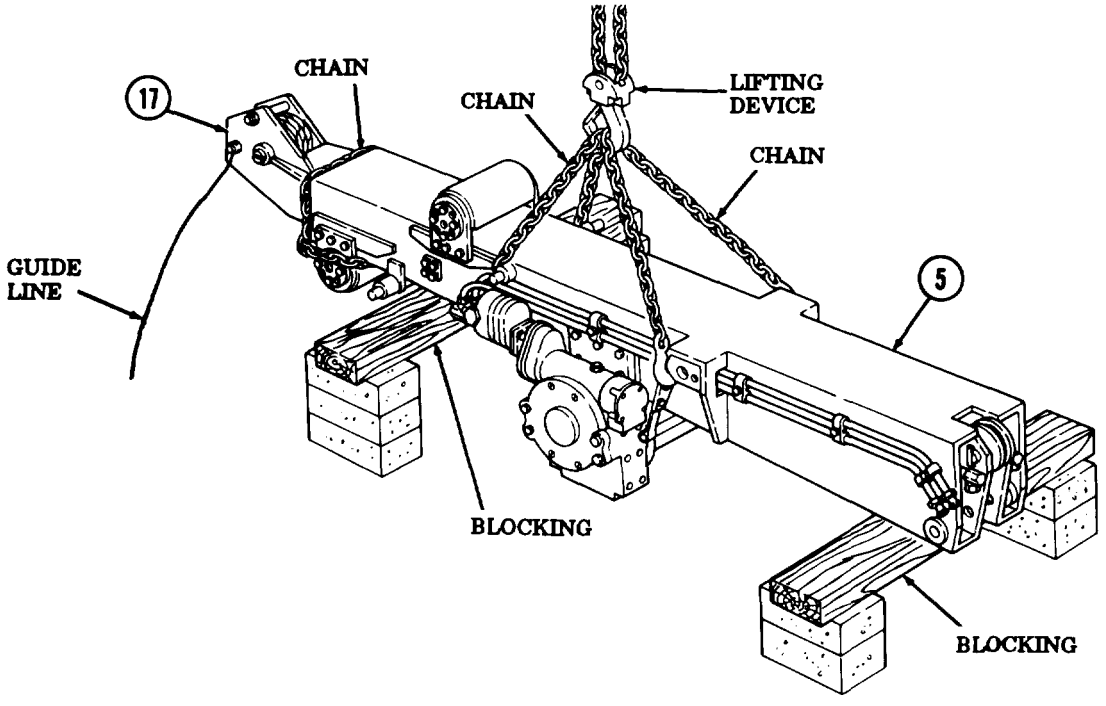

16-18. BOOM ASSEMBLY REPLACEMENT (M816) (Contd)

b. Installation

NOTE

Two assistants will help with this procedure.

1. Install guide line around inner boom (1).
2. Wrap chain around lower boom roller (4) and inner boom (1) to hold inner boom (1) in position.
3. Install two chains on brackets (3) and boom (2) and attach to lifting device.

WARNING

- All personnel must stand clear during lifting operations. A swinging or shifting load may cause injury to personnel.
- Keep hands clear of boom and boom support when installing boom. Use tanker or prybar to maneuver and aline boom into position. Failure to do so may cause injury to personnel.
- Ensure lifting capacity is greater than weight (2850 lb (1300 kg)) of boom assembly. Failure to do so may result in injury to personnel or damage to equipment.

NOTE

Apply a light coat of GAA grease to trunnions of boom and boom support, shaft pin, and sheave prior to installation.

4. Raise boom (2) from blocking. Direct assistants to guide boom (2) into position over boom support (13) and vehicle.
5. Using drift, aline boom (2) in boom support (13).
6. Using hammer and drift, install sheave (15) and shaft pin (12) in boom support (13) and boom (2).
7. Install new locknut (14) and two grease fittings (11) on shaft pin (12). Tighten locknut (14) 800-1000 lb-ft (1085-1356 N·m).
8. Direct three assistants to raise elevating cylinders (10). Lower boom (2) and position elevating cylinders (10) on brackets (5) and boom (2).
9. Install elevating cylinders (10) on brackets (5) and boom (2) with two keeper pins (6), washers (9), new lockwashers (7), and screws (8).
10. Lower boom (2) and remove lifting device, chains, and guide line from boom (2).

16-18. BOOM ASSEMBLY REPLACEMENT (M816) (Contd)

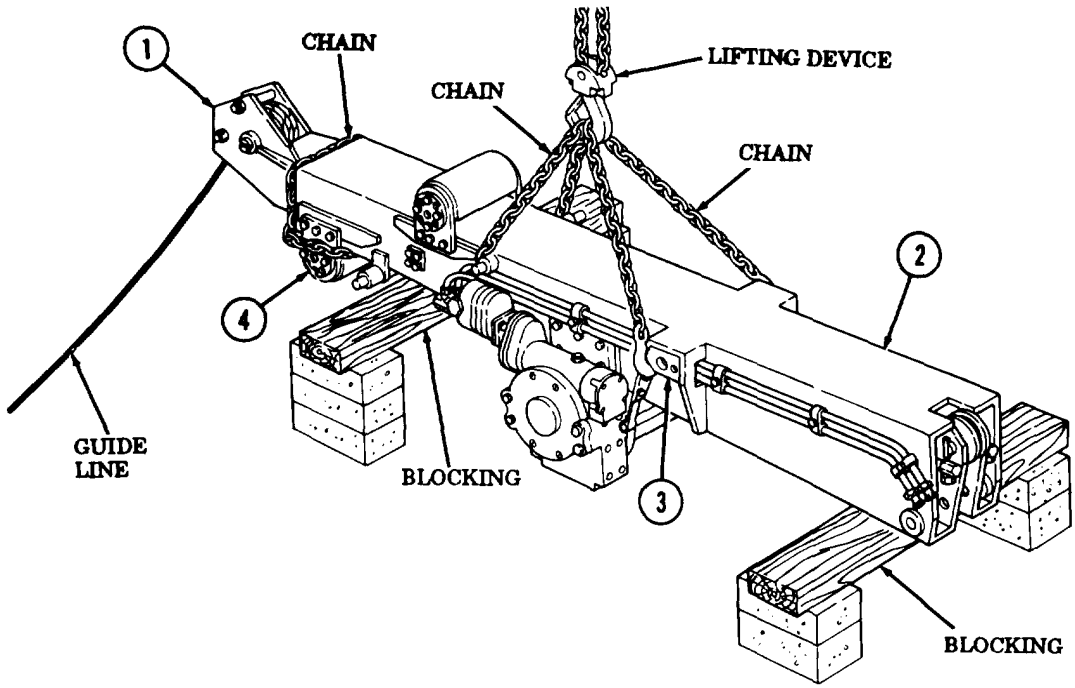

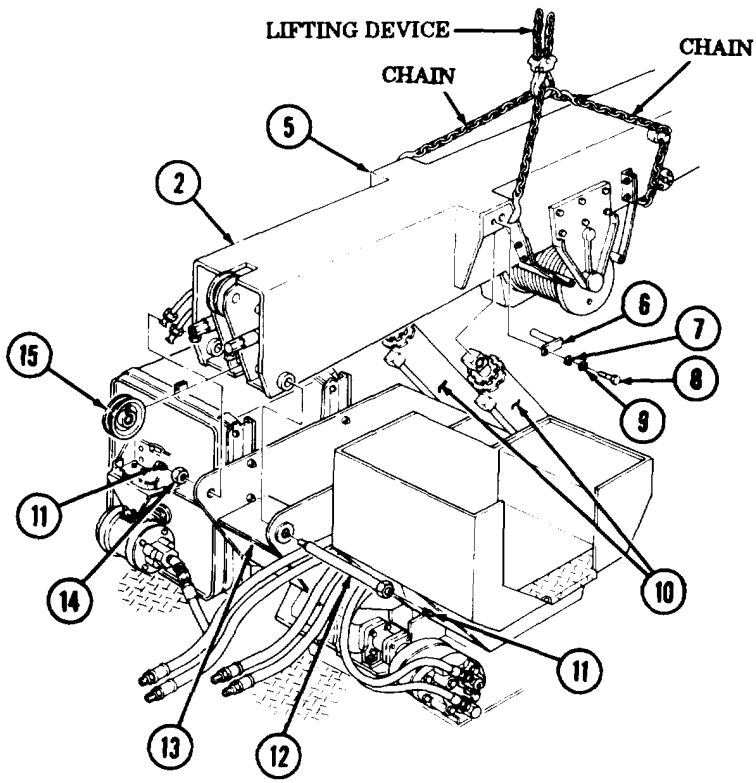

16-18. BOOM ASSEMBLY REPLACEMENT (M816) (Contd)

WARNING

- All personnel must stand clear during lifting operations. A swinging or shifting load may cause injury to personnel.
- Ensure lifting capacity is greater than weight (2850 lb (1300 kg)) of boom assembly. Failure to do so may result in injury or damage to equipment.

11. Install chain on boom (7) and attach to lifting device.
12. Install two shipper braces (8) on boom (7) with safety pins (3).
13. Raise boom (7) slightly, and install shipper braces (8) on brackets (5) with two pins (6) and safety pins (4).
14. Lower boom (7) and remove lifting device and chain from boom (7).
15. Wrap male threads of two hoses (11) and (12) with antiseize tape.
16. Connect two hoses (11) on elbows (10).
17. Connect two hoses (12) on lines (9).

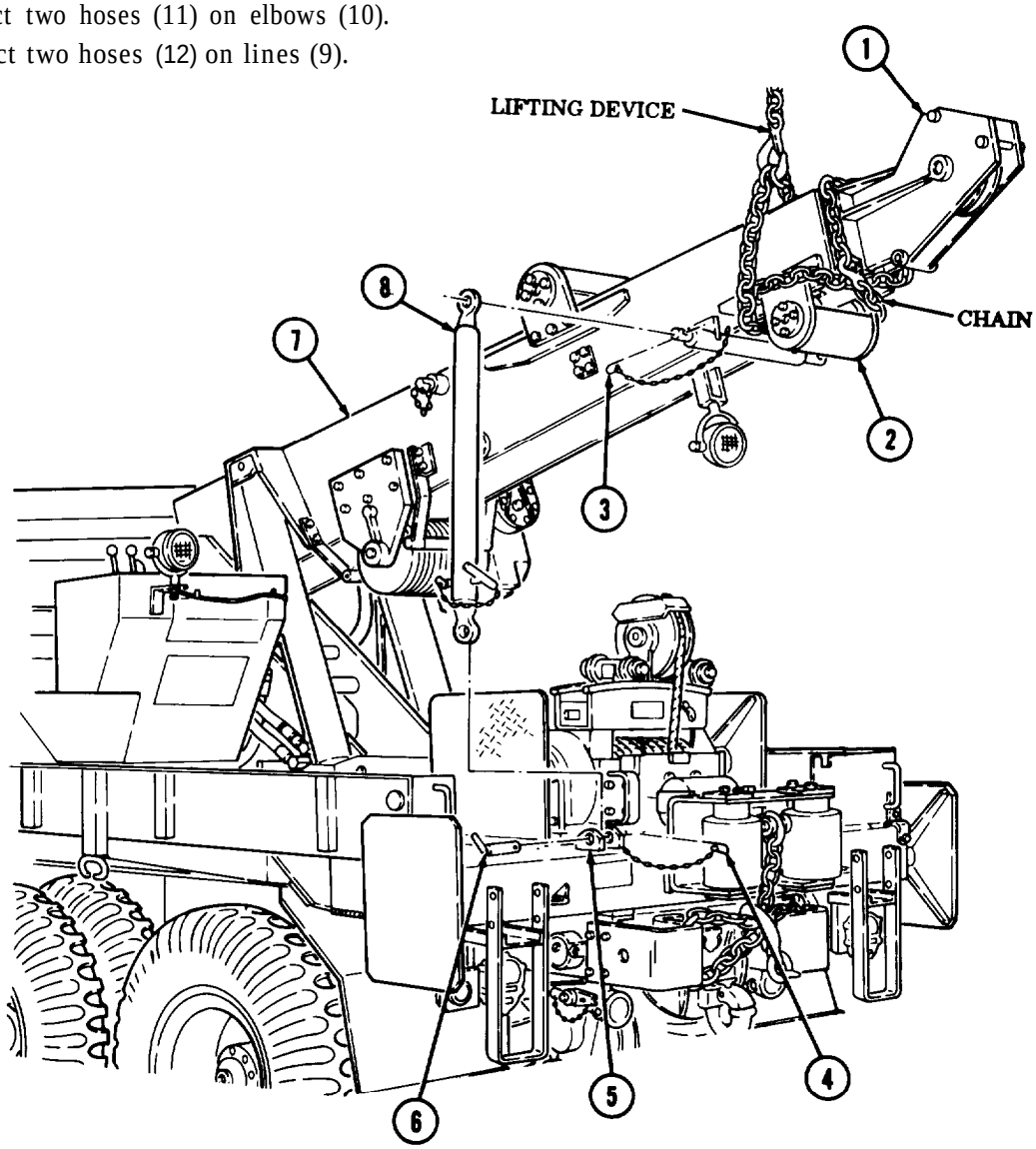

16-18. BOOM ASSEMBLY REPLACEMENT (M816) (Contd)

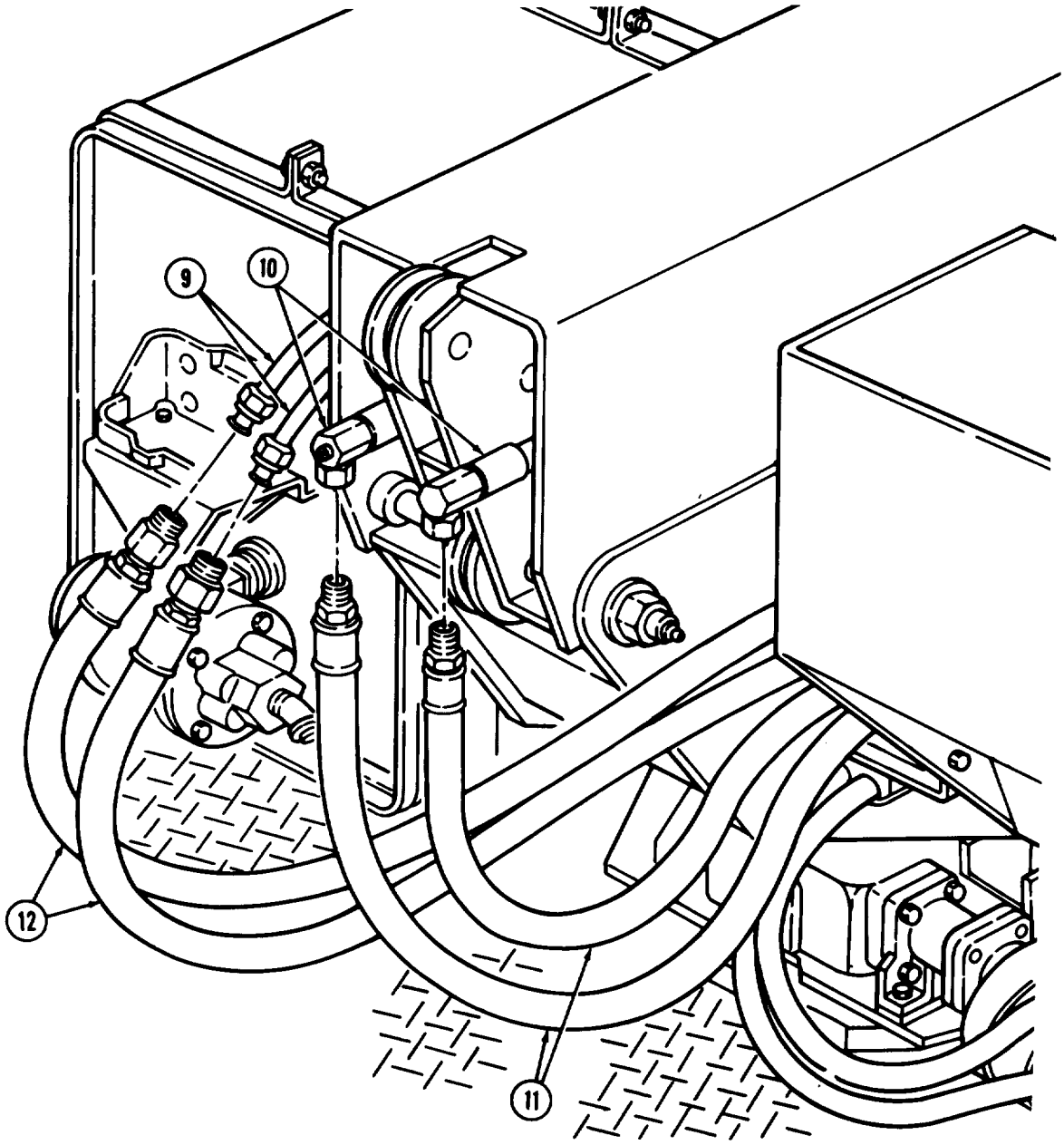

FOLLOW-ON TASKS:
- Lubricate boom (LO 9-2320-260-12).
- Fill hydraulic reservoir to proper oil level (LO 9-2320-260-12).
- Start engine and check for leaks and proper crane operation (TM 9-2320-260-10).
- Adjust upper and lower boom rollers (para. 16-13).
- Install pioneer tool bracket (TM 9-2320-260-20).
- Install operator guard (TM 9-2320-260-20).
- Install hoist winch cable (TM 9-2320-260-20).
- Install floodlight housing and mount (TM 9-2320-260-20).

16-19. INNER BOOM MAINTENANCE (M816)

THIS TASK COVERS:

a. Removal
b. Disassembly
c. Cleaning and Inspection
d. Assembly
e. Installation

INITIAL SETUP

APPLICABLE **MODELS**
M816

TOOLS
General mechanic's tool kit (Appendix B, Item 1)
Chain sling and spreader bar (Appendix B, Item 137)
Outside micrometer (Appendix B, Item 8)
Inside micrometer (Appendix B, Item 9)
Jack stand
Lifting device
Chain
Blocking

MATERIALS/PARTS
Eight Iockwashers (Appendix D, Item 223)
Four Iockwashers (Appendix D, Item 224)
Two locknuts (Appendix D, Item 172)
Two cotter pins (Appendix D, Item 46)
Cotter pin (Appendix D, Item 47)

MATERIALS/PARTS (Contd)
Cotter pin (Appendix D, Item 20)
GAA grease (Appendix C, Item 14)

PERSONNEL REQUIRED
Two

REFERENCES (TM)
TM 9-237
TM 9-2320-260-34P-2

EQUIPMENT CONDITION
Boom assembly removed (para. 16-18).

GENERAL SAFETY INSTRUCTIONS
- All personnel must stand clear during lifting operations.
- Ensure lifting capacity is greater than weight of inner boom.
- The inner boom must be supported at all times to prevent unbalancing of boom.

a. Removal

WARNING

- All personnel must stand clear during lifting operations. A swinging or shifting load may cause injury or death to personnel.
- Ensure lifting capacity is greater than weight (700 lb (318 kg)) of inner boom. Failure to do so may result in injury to personnel or damage to equipment.

1. Attach chain and lifting device on inner boom (2).
2. Raise inner boom (2) to remove weight from pin (4).
3. Remove cotter pin (5) and pin (4) from extension cylinder (3) and boom (1). Discard cotter pin (5).
4. Remove cotter pin (11) and grease fitting (15) from shaft (14). Discard cotter pin (11).
5. Remove four screws (12), Iockwashers (13), cover (10), shaft (14), and inner boom roller (9) from boom (1). Discard Iockwashers (13).
6. Remove eight screws (8), Iockwashers (7), and two stop plates (6) from boom (1). Discard Iockwashers (7).

16-19. INNER BOOM MAINTENANCE (M816)(Contd)

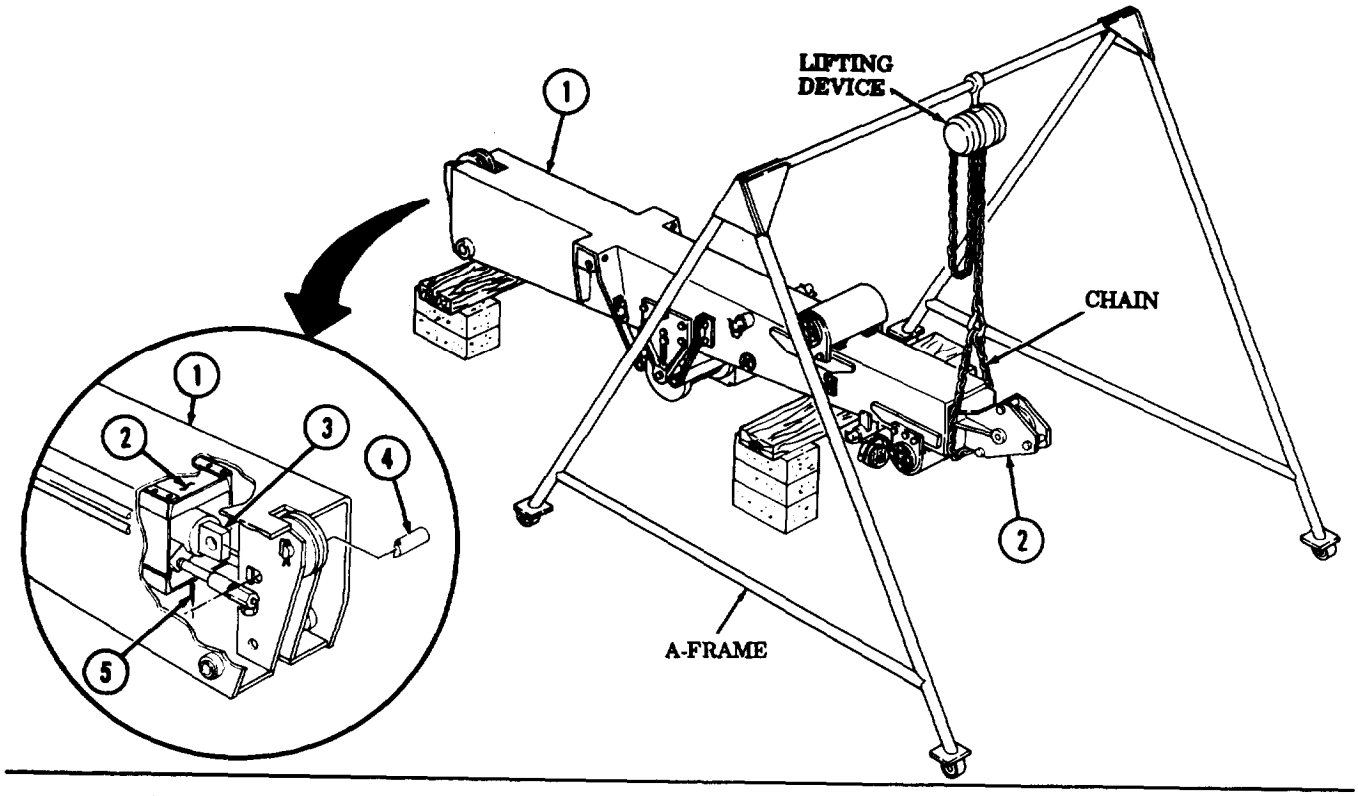

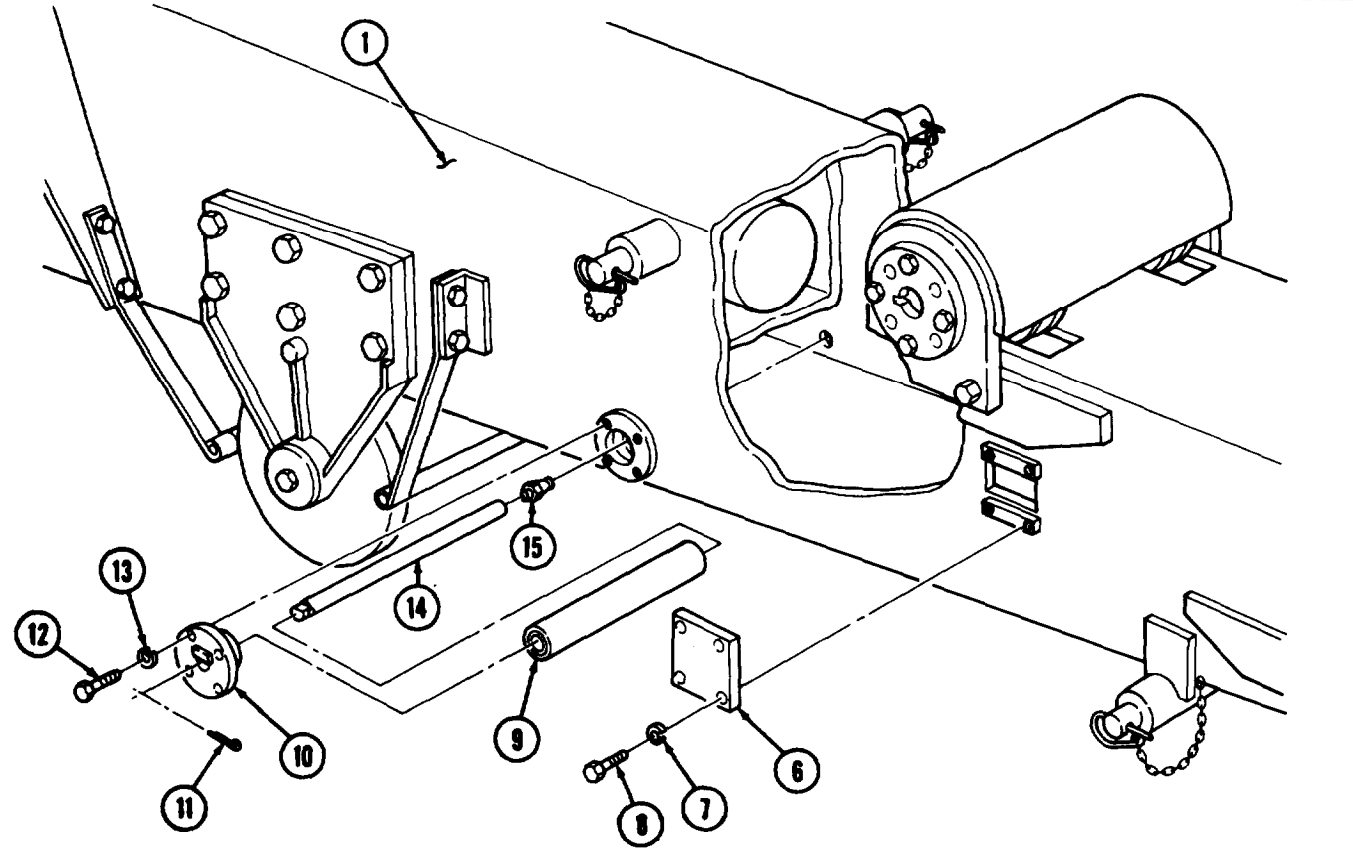

16-19. INNER BOOM MAINTENANCE (M816) (Contd)

NOTE

- Two assistants will help with step 7.
- It may be necessary to loosen adjustments of upper, lower, and inner boom rollers to ease installation of inner boom.

7. Direct assistants to remove inner boom (2) from boom (1) until 18 ft (5,49 m) mark is reached. Place jack stand under rear of inner boom (2).
8. Remove lifting device and chain from inner boom (2).
9. Install chain sling, spreader bar, and lifting device on inner boom (2).
10. Remove inner boom (2) from boom (1) and place on blocking,
11. Remove lifting device, chain sling, and spreader bar from inner boom (2).

b. Disassembly

1. Remove cotter pin (3) and pin (13) from extension cylinder (14) and inner boom (2). Discard cotter pin (3).

NOTE

Assistant will help with steps 2 through 6.

2. Partially remove extension cylinder (14) from inner boom (2). Install one leg of chain sling to extension cylinder (14) and attach to lifting device.
3. Continue removing extension cylinder (14) from inner boom (2) and place on jack stand.
4. Reposition chain sling on extension cylinder (14) and spreader bar and attach to lifting device,
5. Remove extension cylinder (14) from inner boom (2).
6. Remove lifting device, chain sling, and spacer bar from extension cylinder (14).
7. Remove two locknuts (8), screws (10), and spacers (9) from inner boom (2). Discard locknuts (8).
8. Remove two grease fittings (11), cotter pin (7), and shaft (12) from inner boom (2). Discard cotter pin (7).
9. Remove two washers (4), sheaves (5), and spacer (6) from inner boom (2).

16-19. INNER BOOM MAINTENANCE (M816) (Contd)

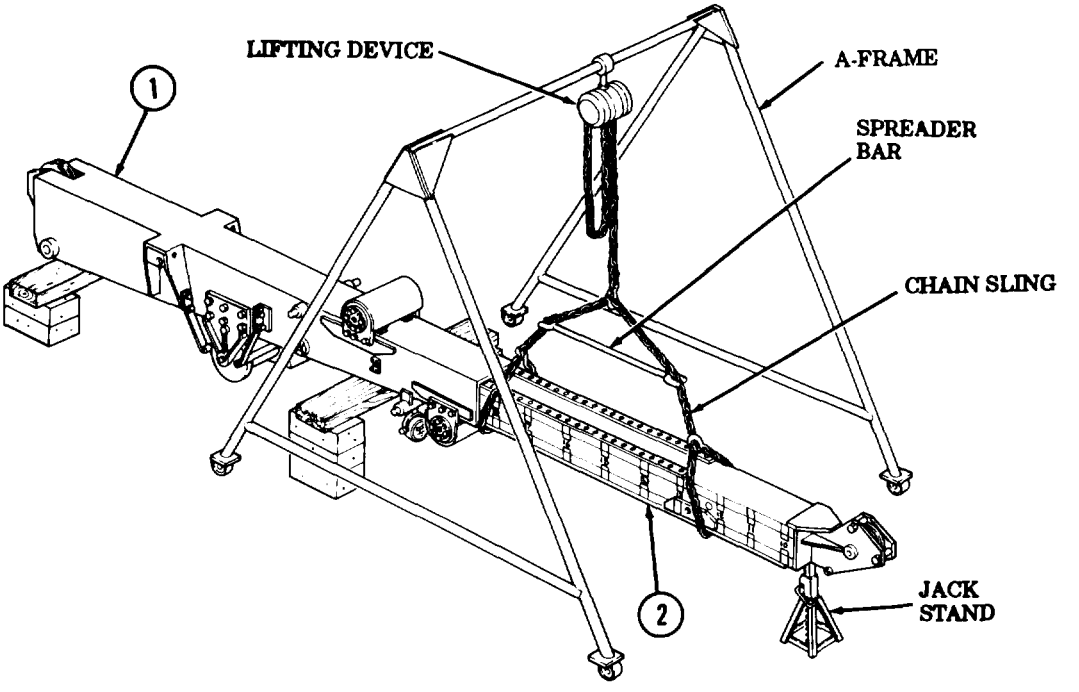

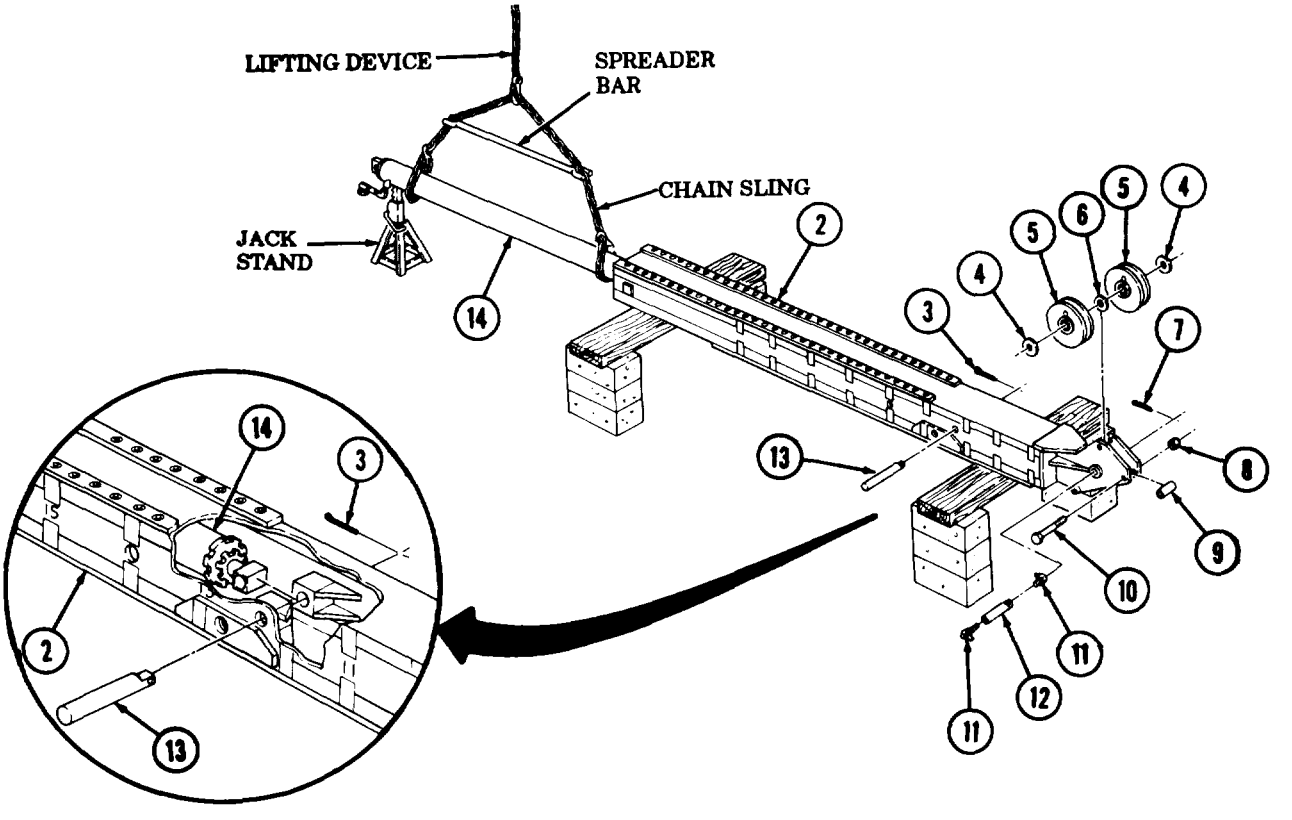

16-19. INNER BOOM MAINTENANCE (M816) (Contd)

NOTE

Assistant will help with steps 10 through 13.

WARNING

- All personnel must stand clear during lifting operations. A swinging or shifting load may cause injury or death to personnel.
- Ensure lifting capacity is greater than weight (700 lb (318 kg)) of inner boom. Failure to do so may result in injury to personnel or damage to equipment.

10. Install chain sling, spreader bar, and lifting device on inner boom (2).
11. Raise inner boom (2) slightly from blocking and position on side. Use prybar in pin hole (1) to aid in turning.
12. Remove lifting device, chain sling, and spreader bar from inner boom (2).

c. Cleaning and Inspection

1. For general cleaning instructions, refer to para. 2-8.
2. For general inspection instruction, refer to para 2-9.
3. Inspect two sheave(s) (6) for bends, cracks, breaks, and wear. Measure inside diameter of bushing (15). Replace bushing(s) (15) if inside diameter exceeds 1.506 in. (38.25 mm). Replace sheave(s) (6) of bent, cracked, broken, or worn.
4. Inspect extension cylinder (14) for cracks, bends, dents, and signs of leaks.
5. Inspect inner boom (2) for bends, cracks, and wear. Repair by welding TM 9-237. Replace inner boom (2) if damaged.

d. Assembly

NOTE

- Perform steps 1 through 3 if assembling new inner boom.
- Assistant will help with steps 1 through 3.

1. Install chain sling, spreader bar, and lifting device on inner boom (2).
2. Position inner boom (2) on blocking as shown. Use prybar in pin hole (1) to aid in turning.
3. Remove lifting device, chain sling, and spreader bar from inner boom (2).
4. Install four tracks (4) on inner boom (2) with one hundred four screws (3).

NOTE

Assistant will help with steps 5 through 11.

5. Install chain sling, spreader bar, and lifting device on inner boom (2).
6. Position inner boom (2) upright on blocking. Use pry bar in pin hole (1) to aid in turning.
7. Remove lifting device, chain sling, and spreader bar from inner boom (2).
8. Install chain sling, spreader bar, and lifting device on extension cylinder (14).
9. Aline piston trunnion head (16) with pin hole (1) in inner boom (2) and insert extension cylinder (14) until contact is made with chain sling.
10. Position jack stand under base of extension cylinder (14).
11. Remove chain sling and spreader bar from extension cylinder (14). Continue to insert extension cylinder (14) into inner boom (2) until holes of piston trunnion head (16) and inner boom (2) are alined.

16-19. INNER BOOM MAINTENANCE (M816) (Contd)

12. Insert pin (18) through inner boom (2) and piston trunnion head (16) and install with new cotter pin (17).
13. Apply a light coat of GAA grease on two washers (5) and inside diameter of two sheaves (6) and spacer (7). Position in inner boom (2), and install with pin (13) and new cotter pin (8).
14. Install two grease fittings (12) on pin (13).
15. Install two spacers (10) on inner boom (2) with two screws (11) an new locknuts (9).

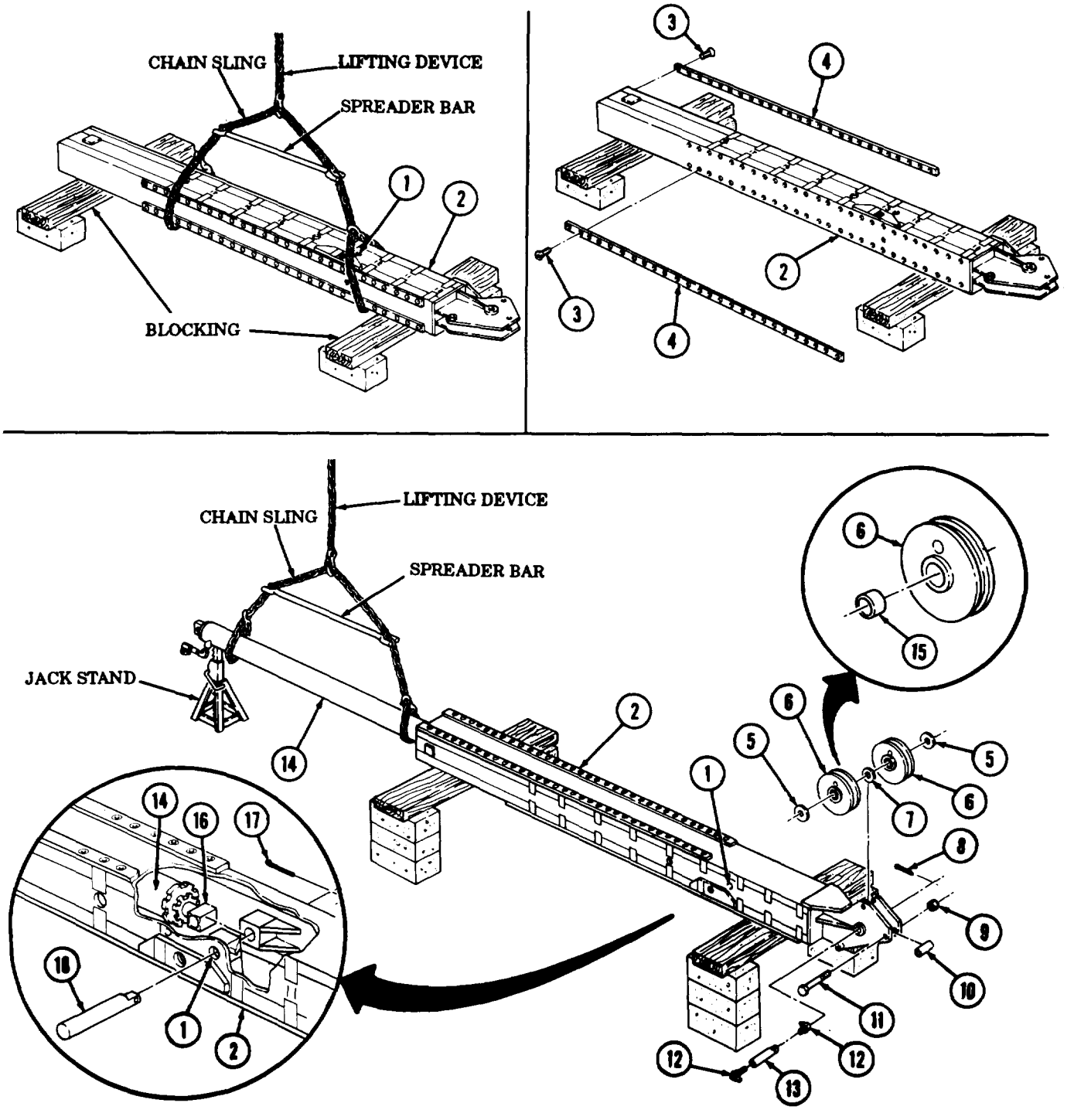

16-19. INNER BOOM MAINTENANCE (M816) (Contd)

e. Installation

WARNING

- All personnel must stand clear during lifting operations. A swinging or shifting load may cause injury or death to personnel.
- Inner boom must be supported during installation to prevent unbalancing of boom. Failure to do so may cause injury to personnel.
- Ensure lifting capacity is greater than weight (700 lb (318 kg)) of inner boom. Failure to do so may result in injury to personnel or damage to equipment.

NOTE

- Two assistants will help with installation.
- It may be necessary to loosen adjustments of upper boom roller, lower boom roller, and inner boom roller to ease in installation of inner boom.

1. Install chain sling, spreader bar, and lifting device on inner boom (2).
2. Raise inner boom (2) and insert boom (1).
3. Direct assistant to adjust lifting sling while another guides inner boom (2) into boom (1) until inner boom (2) contacts leg of chain sling.
4. Place jacks under inner boom (2).
5. Remove chain sling, spreader bar, and lifiing device from inner boom (2).
6. Install chain sling and lifting device on end of inner boom (2).
7. Continue to install inner boom (2) in boom (1).
8. Aline trunnion (4) of extension cylinder (3) with brackets (6) of boom (1) and install with pin (5) and new cotter pin (7).
9. Install two stop plates (12) on boom (1) with eight new Iockwashers (13) and screws (14).
10. Place inner boom roller (15) on shaft (16) and install in boom (1).
11, Install cover (10) on boom (1) with four new lockwashers (9) and screws (8).
12. Install new cotter pin (17) and two grease fittings (11) on shaft (16).
13. Remove lifting device and chain from inner boom (2).

16-19. INNER BOOM MAINTENANCE (Contd)

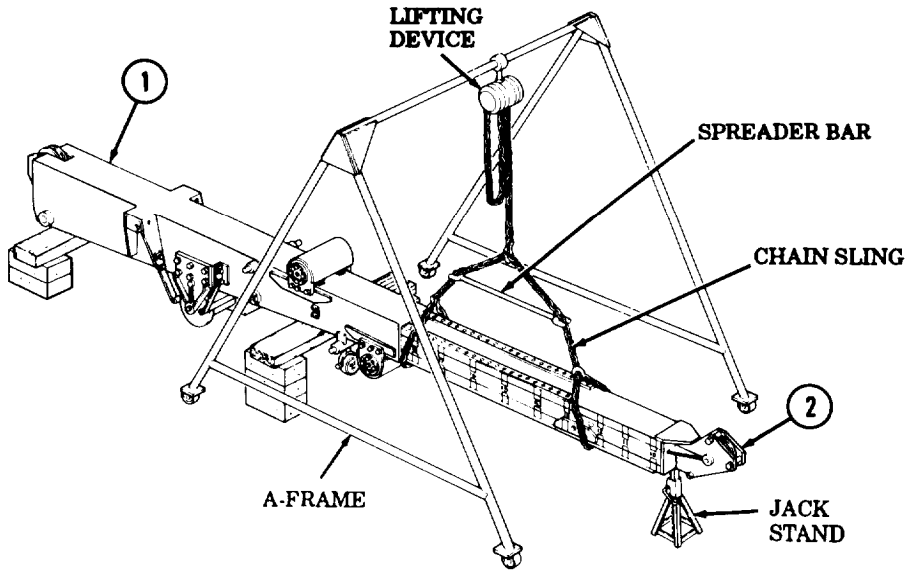

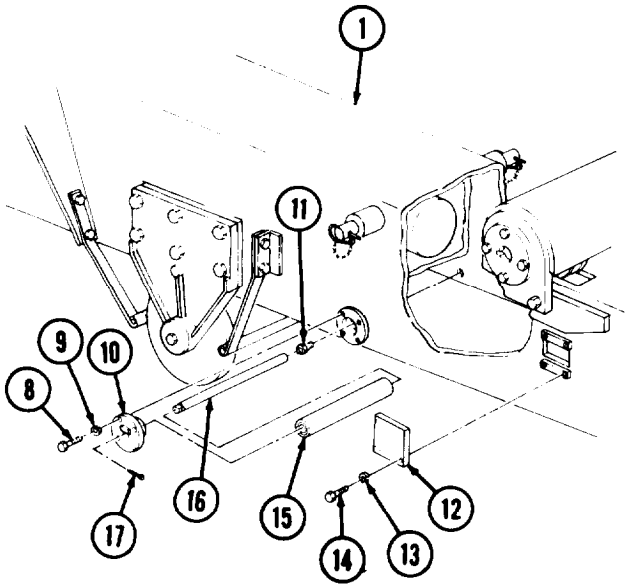

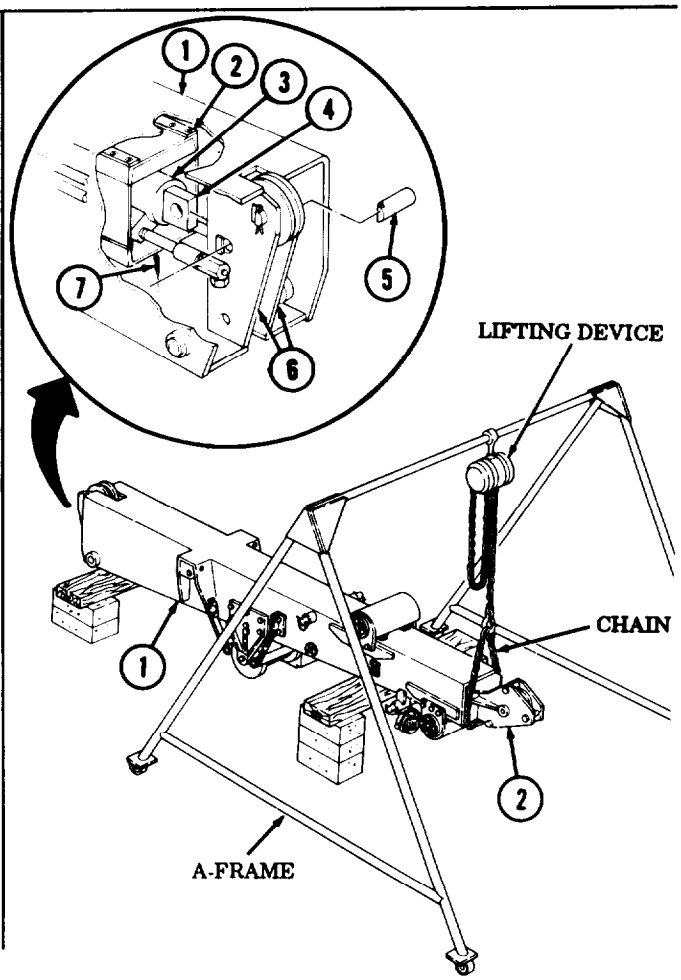

FOLLOW-ON TASK: Install boom assembly (para. 16-18).

16-20. EXTENSION CYLINDER REPAIR (M816)

THIS TASK COVERS:

a. Disassembly
b. Cleaning, Inspection, and Repair
c. Reassembly

INITIAL SETUP

APPLICABLE MODELS
M816

TOOLS
General mechanic's tool kit (Appendix B, Item 1)
Spanner wrench (Appendix B, Item 136)

SPECIAL TOOLS
Bushing installer (Appendix B, Item 148)
Handle (Appendix B, Item 149)

MATERIALS/PARTS
Seal (Appendix D, Item 463)
Safety wire (Appendix D, Item 376.1)
Packing (Appendix D, Item 301)

MATERIALS/PARTS (Contd)
Packing (Appendix D, Item 310)
Crocus cloth (Appendix C, Item 8)
Link free cloth (Appendix C, Item 9)

REFERENCES (TM)
TM 9-2320-260-34P-2

EQUIPMENT CONDITION
Extension cylinder removed (para. 16-18).

GENERAL SAFETY INSTRUCTIONS
Keep fire extinguisher nearby when using drycleaning solvent.

a Removal

1. Remove elbows (8) and (9), two couplings (6), nipples (5), and elbow (10) from extension cylinder (4).
2. Remove plug (7) from elbow (8).
3. Remove grease fitting (3) from piston rod (1).
4. Using spanner wrench, remove cylinder head (2) and piston rod (1) from extension cylinder (4).
5. Remove safety wire (11), piston rod nut (12), and washer (13) from piston rod (1). Discard safety wire (11).
6. Remove two U-cup retainers (14), U-cups (15), piston (17), and cylinder head (2) from piston rod (1).
7. Remove two half rings (16) from piston (17).
8. Remove packing (18), packing nut (21), packing (20), and piston rod bushing (19) from cylinder head (2). Discard packing (18) and packing (20).
9. Remove seal (22) from packing nut (21). Discard seal (22).

16-20. EXTENSION CYLINDER REPAIR (M816) (Contd)

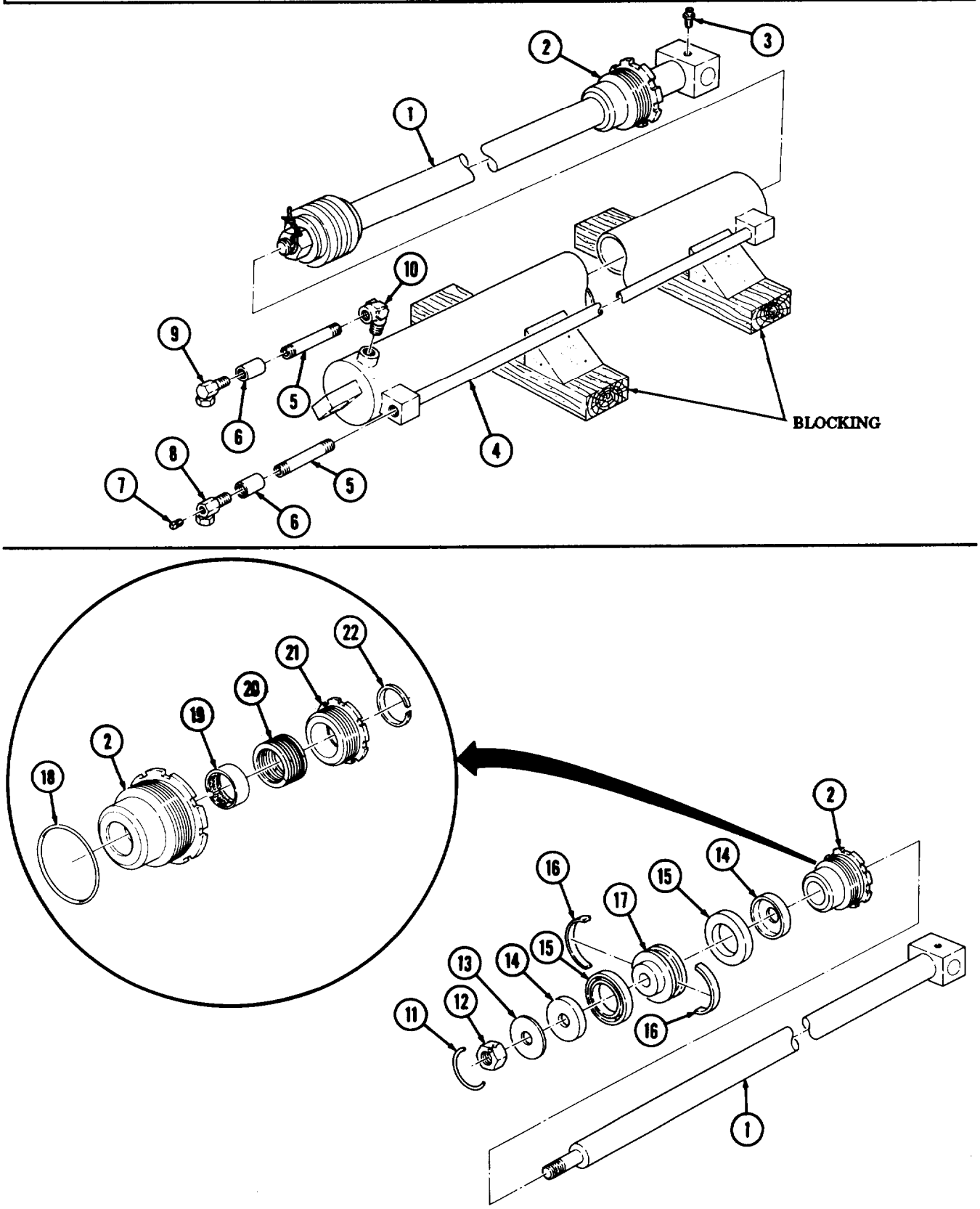

16-20. EXTENSION CYLINDER REPAIR (M816) (Contd)

b. Cleaning, Inspection, and Repair

WARNING

Drycleaning solvent is flammable and will not be used near open flame. Use only in well-ventilated places. Failure to do so may result in injury to personnel.

1. For general cleaning instructions, refer to para. 2-8.
2. For general inspection instructions, refer to para. 2-9.
3. Inspect piston rod (2) for burrs, scoring, scratches, and stripped threads. Remove minor scratches and burrs with crocus cloth. If piston rod (2) is scored, or if stripped threads are evident. replace piston rod (2).
4. Inspect piston (9) and extension cylinder (16) for scoring. If scored, replace.

c. Reassembly

1. Install new seal (14) in packing nut (13).
2. Install new packing (10), piston rod bushing (11), new packing 12), and packing nut 13) on cylinder head (1).
3. Install two half rings (8) on piston (9).

NOTE

Use care not to damage wiper strip when passing over threads on piston rod.

4. Install cylinder head (1) on piston rod (2).
5. Install two U-cup retainers (6), U-cups (7), and piston (9) on piston rod (2) with washer (5) and piston rod nut (4).
6. Install new safety wire (3) on piston rod nut (4) and piston rod (2).
7. Slide piston rod (2) into extension cylinder (16) and install cylinder head (1) on extension cylinder (16). Use spanner wrench to tighten cylinder head (1).
8. Install grease fitting (15) on piston rod (2).
9. Install plug (19) on elbow (20).
10. Install elbow (22), two nipples (17), couplings (18), and elbows (20) and (21) on extension cylinder (16).

16-20. EXTENSION CYLINDER REPAIR (M816) (Contd)

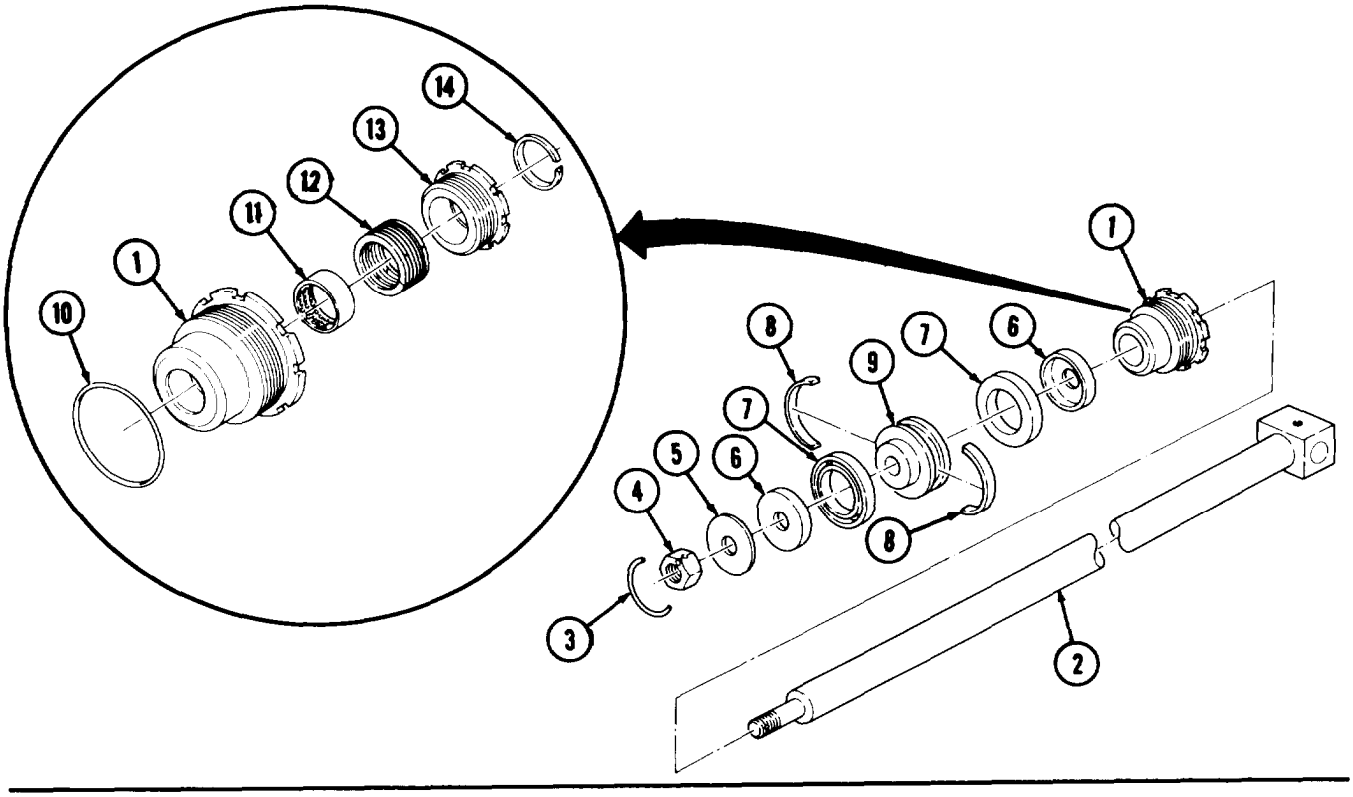

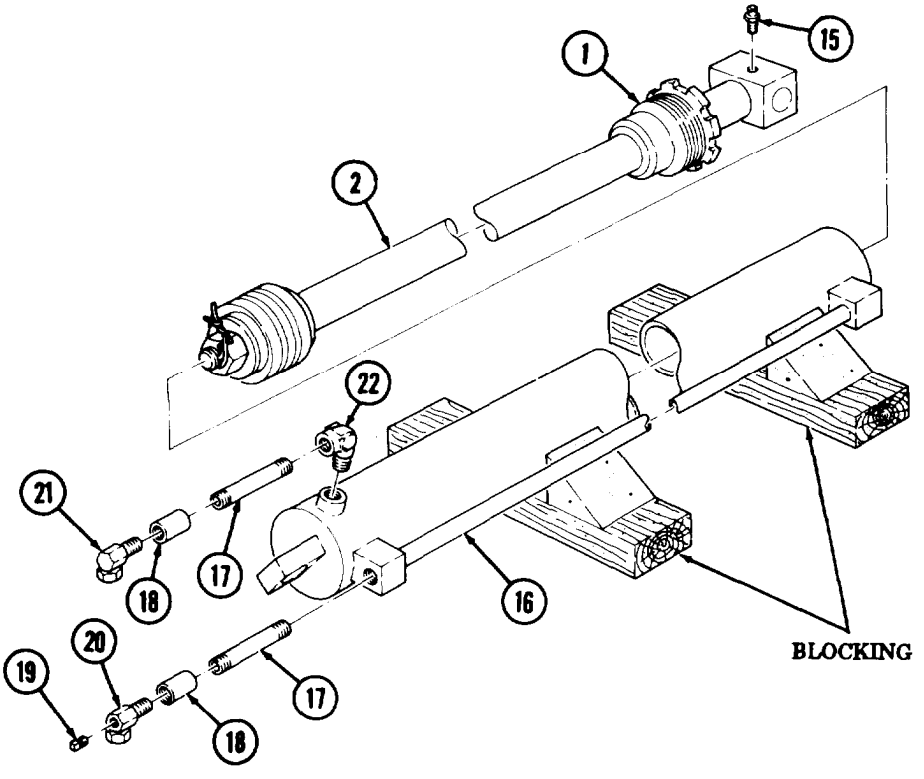

FOLLOW-ON TASKS: • Lubricate extension cylinder (LO 9-2320-272-12).
• Install extension cylinder (para. 16-18).

16-21. BOOM REPAIR (M816)

THIS TASK COVERS:

a. Removal
b. Cleaning, Inspection, and Repair
c. Assembly

INITIAL SETUP

APPLICABLE MODELS
M816

TOOLS
General mechanic's tool kit (Appendix B, Item 1)
1-1/2-in. open-end wrench (Appendix B, Item 125)
Spanner wrench (Appendix B, Item 136)

MATERIALS/PARTS
Twelve lockwashers (Appendix D, Item 219)
Six lockwashers (Appendix D, Item 218)
Four locknuts (Appendix D, Item 177)
Four locknuts (Appendix D, Item 192)
Two cotter pins (Appendix D, Item 49)

MATERIALS/PARTS (Contd)
Antiseize tape (Appendix C, Item 50)
GM grease (Appendix C, Item 14)

REFERENCES (TM)
TM 9-237
TM 9-2320-260-34P-2

EQUIPMENT CONDITION
Inner boom removed (para. 16-19).

GENERAL SAFETY INSTRUCTIONS
- All personnel must stand clear during lifting operations.
- Ensure lifting capacity is greater than weight of hoist winch.

a. Removal

1. Remove two nuts (4), washers (2), and floodlight (3) from boom (1).

NOTE

- Upper and lower boom rollers are removed the same. Step 2 is for the upper boom roller.
- Assistant will help with step 2.

2. Remove six screws (5), lockwashers (6), and boom roller (7) from boom (1). Discard lockwashers (6).

NOTE

Both level wind rollers are removed the same. Steps 3 through 5 cover the removal of one level wind roller.

3. Remove four locknuts (14), screws (13), two hangers (9), and level wind roller (10) from boom (1). Discard locknuts (14).
4. Remove grease fitting (12) from shaft (11).
5. Remove cotter pin (8), two hangers (9), and level wind roller (10) from shaft (11). Discard cotter pin (8).

16-21. BOOM REPAIR (M816) (Contd)

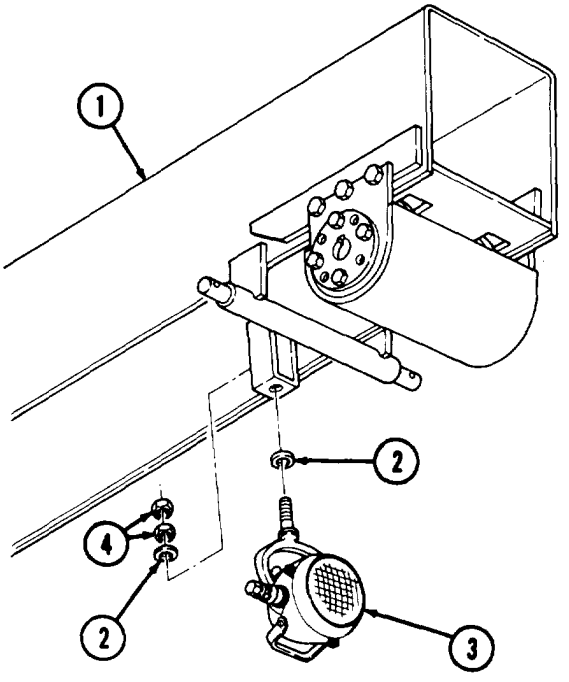

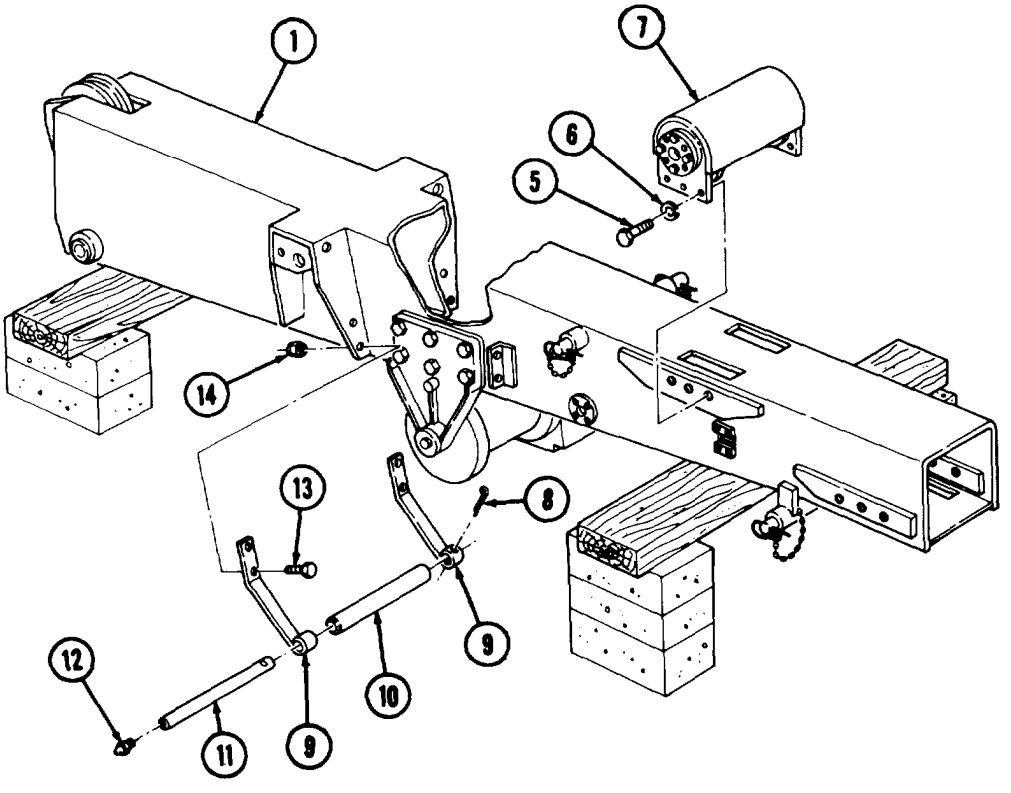

16-21. BOOM REPAIR (M816) (Contd)

6. Install chain on hoist winch (5) and attach to lifting device. Take up slack in chain.

NOTE

- Tag lines and fittings for installation.
- Have drainage container ready to catch oil.

7. Disconnect two hydraulic lines (1) from hoist winch motor (6).

WARNING

- All personnel must stand clear during lifting operations. A swinging or shifting load may cause injury to personnel.
- Ensure lifting capacity is greater than weight (400 lb (182 kg)) of hoist winch. Failure to do so may result in injury to personnel or damage to equipment.

NOTE

Assistant will help with step 8.

8. Remove twelve screws (4) and lockwashers (3), and hoist winch (5) from boom (2). Discard lockwashers (3).
9. Lower hoist winch (5) from boom (2). Remove lifting device and chain from hoist winch (5).
10. Remove four locknuts (13), clamps (12), two lines (14), and eight pads (11) from boom (2). Discard locknuts (13).
11. Remove cotter pin (7) from pin (10). Discard cotter pin (7).
12. Using hammer and drive, remove pin (10) and sheave (9) from boom (2).
13. Remove grease fitting (8) from sheave (9).

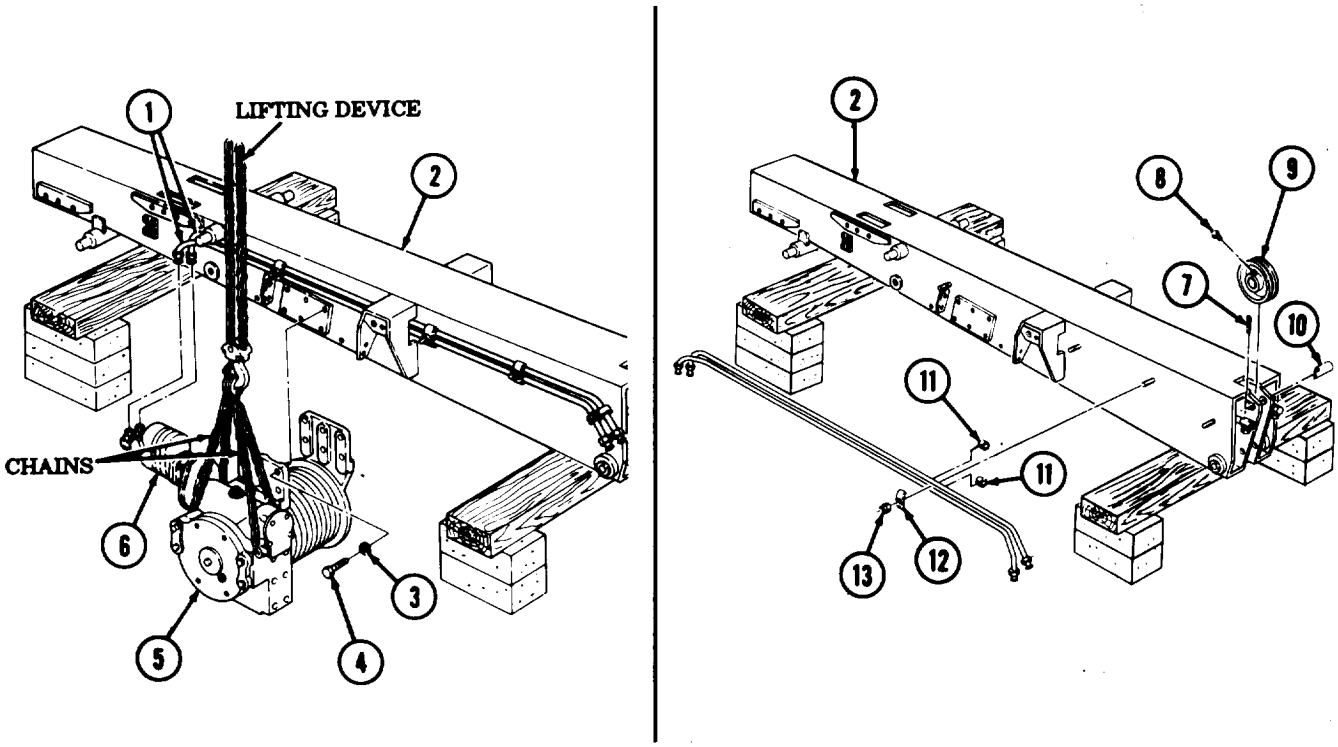

16-21. BOOM REPAIR (M816) (Contd)

b. Cleaning, Inspection, and Repair

1. For general cleaning instructions, refer to para. 2-8.
2. For general inspection instructions, refer to para. 2-9.
3. For general repair instructions, refer to para. 2-10.
4. Inspect level wind rollers (1), sheave (3), and boom (5) for bends, cracks, breaks, and wear. Refer to table 16-13, Boom Assembly Wear Limits, for measurements. Replace level wind rollers (1). sheave (3), or boom (5) if damaged or worn.
5. Inspect bushings (2), (4), and (6) for wear. Refer to table 16-13, Boom Assembly Wear Limits, for measurements. Replace bushings (2), (4), and (6) if worn.

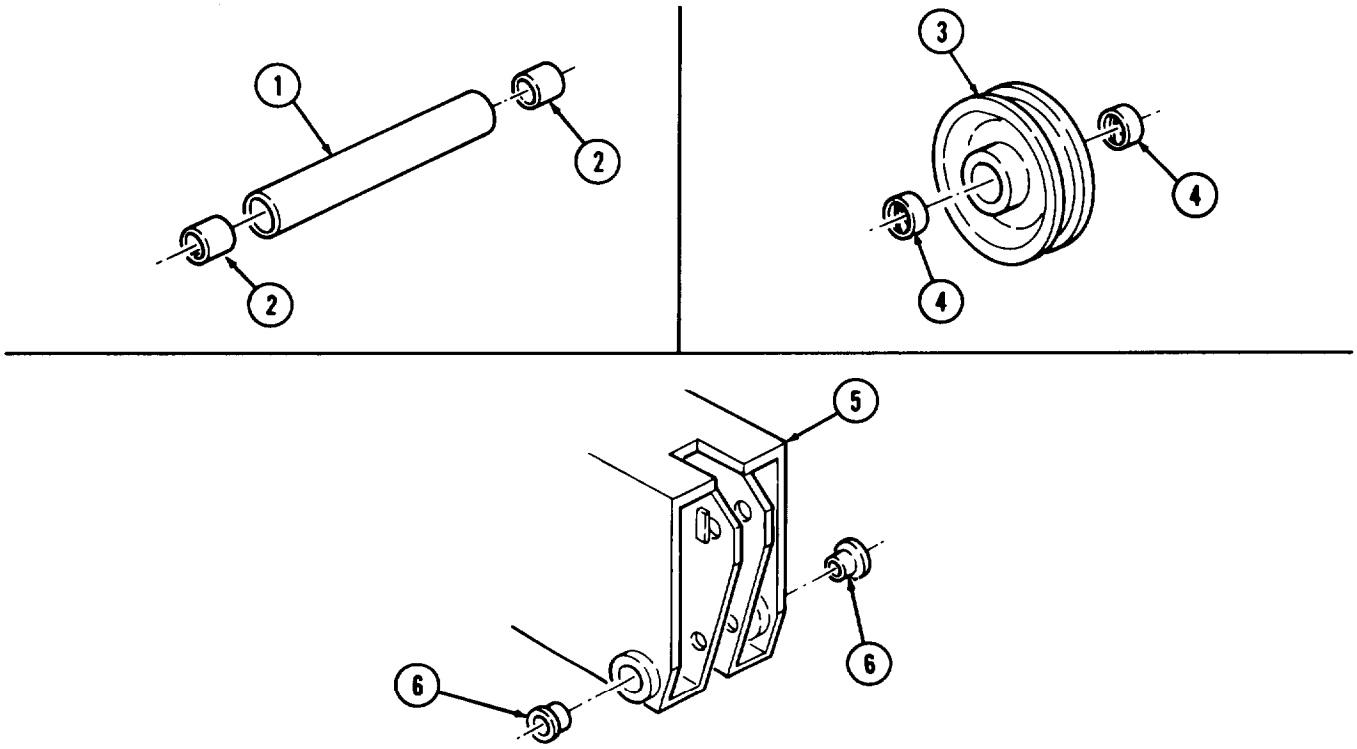

Table 16-13. Boom Assembly Wear Limits.

ITEM NO.	ITEM/POINT OF MEASUREMENT	WEAR LIMITS/TOLERANCES	
		INCHES	MILLIMETERS
1	Level wind rollers		
2	Bushings – inside diameter – maximum		
	Steel	1.004	25.50
	Brass	1.006	25.55
3	Sheave		
4	Bushings – inside diameter – maximum	1.515	38.48
5	Boom		
6	Bushing – inside diameter – maximum	1.506	38.25

16-21. BOOM REPAIR (M816) (Contd)

6. Inspect floodlight (1) for damage. Repair floodlight if damaged (TM 9-2320-260-20).
7. Inspect hoist winch motor (2), hoist winch (3), and upper and lower boom rollers (4) for damage. Repair hoist winch motor (2), hoist winch (3), or upper and lower boom roller(s) (4) if damaged (para, 16-15, 16-17, or 16- 13).

c. Assembly

1. Install grease fitting (7) on sheave (8).
2. Install sheave (8) on boom with pin (9) and new cotter pin (6),
3. Insert two lines (13) through bracket (14) and position on boom (5).
4. Install eight pads (10) and two lines (13) on boom (5) with four clamps (11) and new locknuts (12).

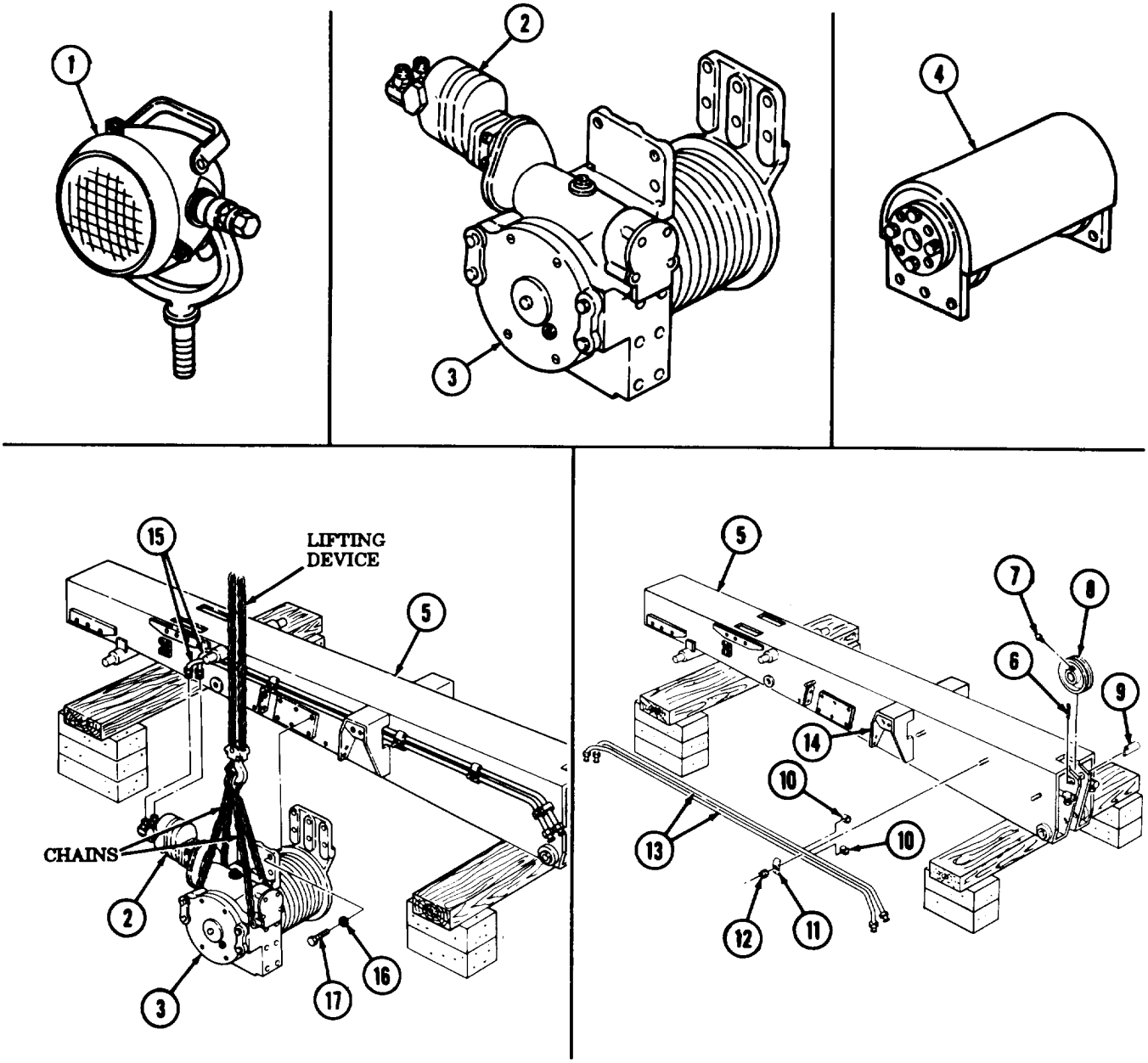

16-21. BOOM REPAIR (M816) (Contd)

WARNING

- All personnel must stand clear during lifting operations. A swinging or shifting load may cause injury to personnel.
- Ensure lifting capacity is greater than weight (400 lb (182 kg)) of hoist winch. Failure to do so may result in injury to personnel or damage to equipment.

NOTE

Assistant will help with steps 5 and 6.

5. Install chain and lifting device on hoist winch (3).
6. Install hoist winch (3) on boom (5) with twelve new lockwashers (16) and screws (17).
7. Connect two lines (15) to hoist winch motor (2).

NOTE

- All hanger rollers are installed the same way. This procedure covers rear hanger rollers.
- Apply a light coat of GM grease to all shafts and bushings of rollers prior to installation.

8. Install roller (23) on shaft (22).
9. Install hanger (21) on each end of shaft (23) level wind roller (22) and bracket (14) with four new locknuts (26) and screws (25).
10. Install shaft (23) and level wind rollers (22) on brackets (14) with new cotter Pin (20).
11. Wrap male threads on grease fitting (24) with antiseize tape.
12. Install grease fitting (24) in shaft (23).

NOTE

- Upper and lower boom rollers are installed the same way. This procedure covers upper boom rollers.
- Assistant will help with step 13.

13. Install upper boom roller (4) on boom (5) with six new Iockwashers (18) and screws (19).
14. Install floodlight (28) on boom (5) with two washers (27) and nuts (29).

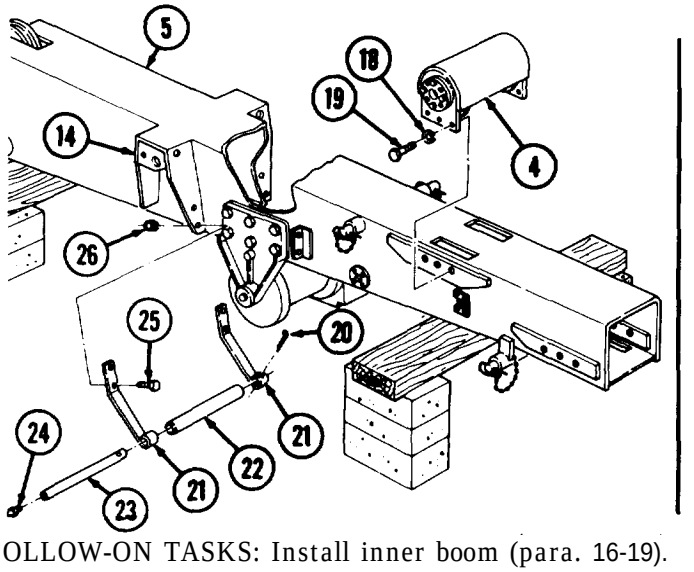

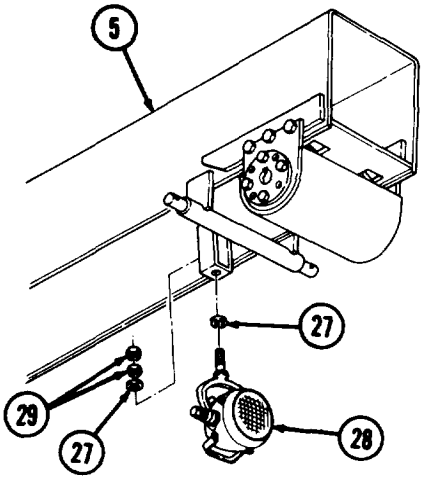

FOLLOW-ON TASKS: Install inner boom (para. 16-19).

16-22. CRANE GONDOLA MAINTENANCE (M816)

THIS TASK COVERS:

a. Removal
b. Disassembly
c. Cleaning and Inspection
d. Assembly
e. Installation

INITIAL SETUP

APPLICABLE MODELS
M816

TOOLS
General mechanic's tool kit (Appendix B, Item 1)
Chain
Lifting device

MATERIALS/PARTS
Twelve Iockwashers (Appendix D, Item 223)
Six locknuts (Appendix D, Item 176)
Twelve locknuts (Appendix D, Item 200)
Six screw-assembled Iockwashers (Appendix D, Item 382)
Three seals (Appendix D, Item 472)

REFERENCES (TM)
LO 9-2320-260-12
TM 9-2320-260-10

REFERENCES (TM) (Contd)
TM 9-2320-260-20
TM 9-2320-260-34P-2

EQUIPMENT CONDITION
- Oil reservoir drained (LO 9-2320-26-12).
- Control valve removed (TM 9-2320-260-20).
- Floodlight removed (TM 9-2320-260-20).
- Floodlight wiring harness removed (TM 9-2320-260-20).
- Gondola seat cushions removed (TM 9-2320-260-20).
- Fire extinguisher brackets removed (TM 9-2320-260-20).

GENERAL SAFETY INSTRUCTIONS
- All personnel must stand clear during lifting operations.
- Ensure lifting capacity is greater than weight of crane gondola.

a. Removal

1. Loosen swivel nuts (2) and (4), and remove tube (3) and flex hose (5) from crossover tee (17).

NOTE

Mark and record hoses and locations on brackets before removal.

2. Remove three locknuts (8) and clamps (7) from studs (15) in bracket (16) and six hydraulic hoses (11). Discard locknuts (8).
3. Remove three locknuts (9) and clamps (10) from studs (13) in bracket (12). Discard locknuts (9).
4. Pull hydraulic hose (14) out of gondola (6).
5. Remove gondola guard (1) from gondola (6).
6. Attach chain and lifting device to gondola (6) and take up slack in chain.

WARNING

- All personnel must stand clear during lifting operations. A swinging or shifting load may cause injury or death to personnel,
- Ensure lifting capacity is greater than weight (500 lb (227 kg)) of crane gondola. Failure to do so may result in injury to personnel or damage to equipment.

NOTE

Assistant will help with steps 7 and 8.

7. Remove twelve screws (19) and Iockwashers (20) from two gondola brackets (16) and (12) and boom support (18). Discard Iockwashers (20).

16-22. CRANE GONDOLA MAINTENCE (M816) (Contd)

8. **While lifting gondola (6) clear of boom support (18), guide hydraulic hoses (11) clear of gondola (6) and rear bracket (12).**

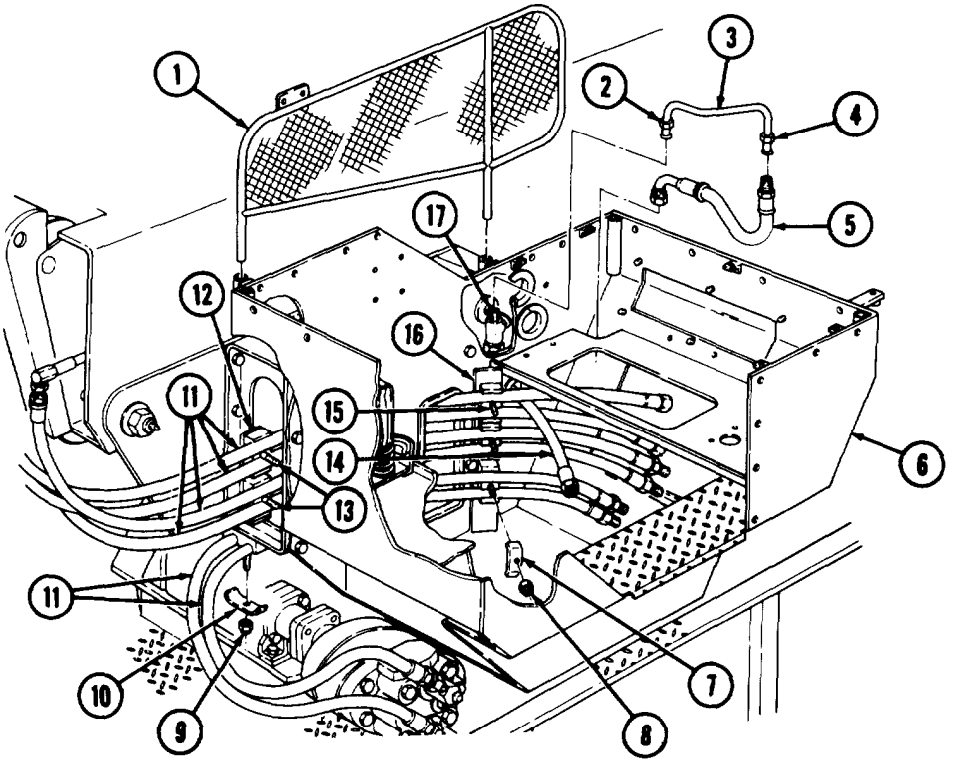

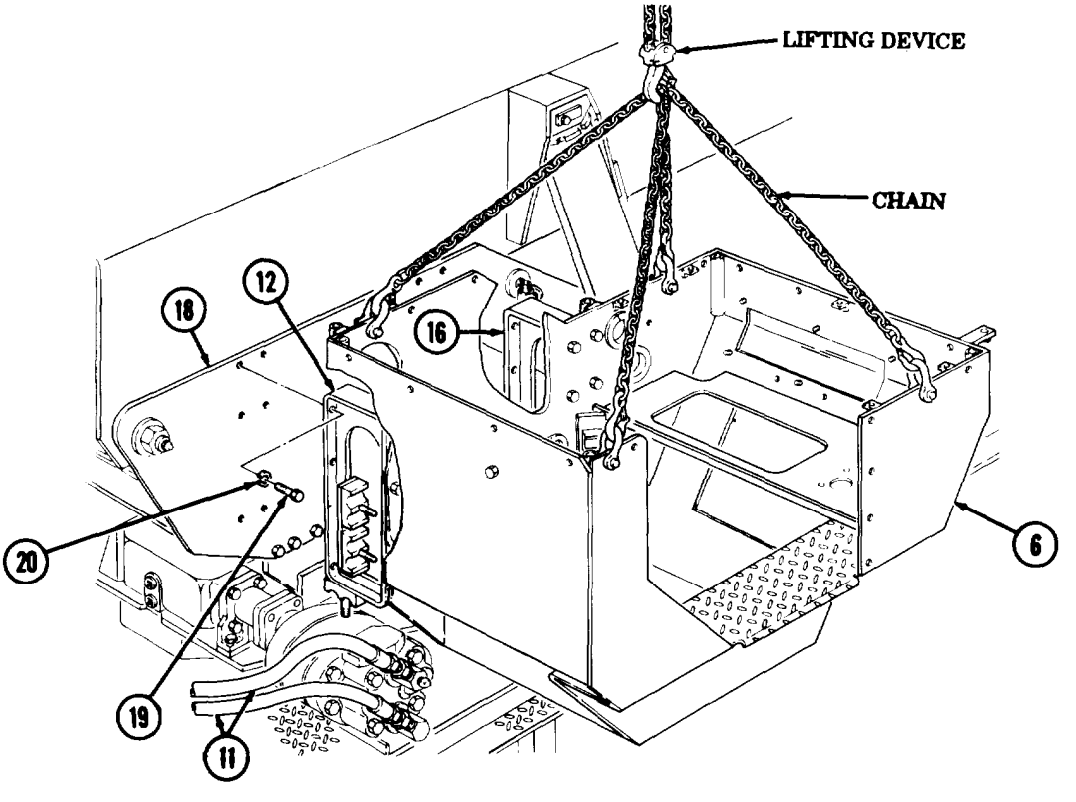

16-22. CRANE GONDOLA MAINTENANCE (M816) (Contd)

b. Disassembly

NOTE

Mark brackets for installation.

1. Remove twelve locknuts (2), screws (6), and brackets (3) and (5) from gondola body (1). Discard locknuts (2).
2. Remove six screw-assembled lockwashers (10) and cover (9) from gondola body (1). Discard screw-assembled lockwashers (10).
3. Remove six screws (7) and cover (8) from gondola body (1).
4. Remove three seals (16) from gondola body (1). Discard seals (16).
5. Remove anti-chafing channel (15) from gondola body (1).
6. Remove two screws (13) and oil can bracket (14) from gondola body (1).

NOTE

Perform step 7 if cover and data plates were installed after control valve was removed.

7. Remove four screws (11) and cover (12) from gondola body (1).

c. Cleaning, Inspection, and Repair

1. For general cleaning instructions, refer to para. 2-8.
2. For general inspection instructions, refer to para. 2-9.
   a. Inspect seals (16) and anti-chafing channel (15) for tears, chafing, cracks, and missing sections.

NOTE

Cover and data plates were removed in equipment condition step, but are included for inspection and repair of gondola.

   b. Inspect cover (12) and warning, caution, and data plates for legibility, and secure for anchorage.
3. Repair damaged and worn parts (para. 2-10). Replace all worn or damaged parts that are unrepairable.
4. Inspect wooden hose supports (4) on bracket (3) and in gondola body (1). Repair or replace wooden hose supports (4) if damaged.

16-22. CRANE GONDOLA MAINTENANCE (M816) (Contd)

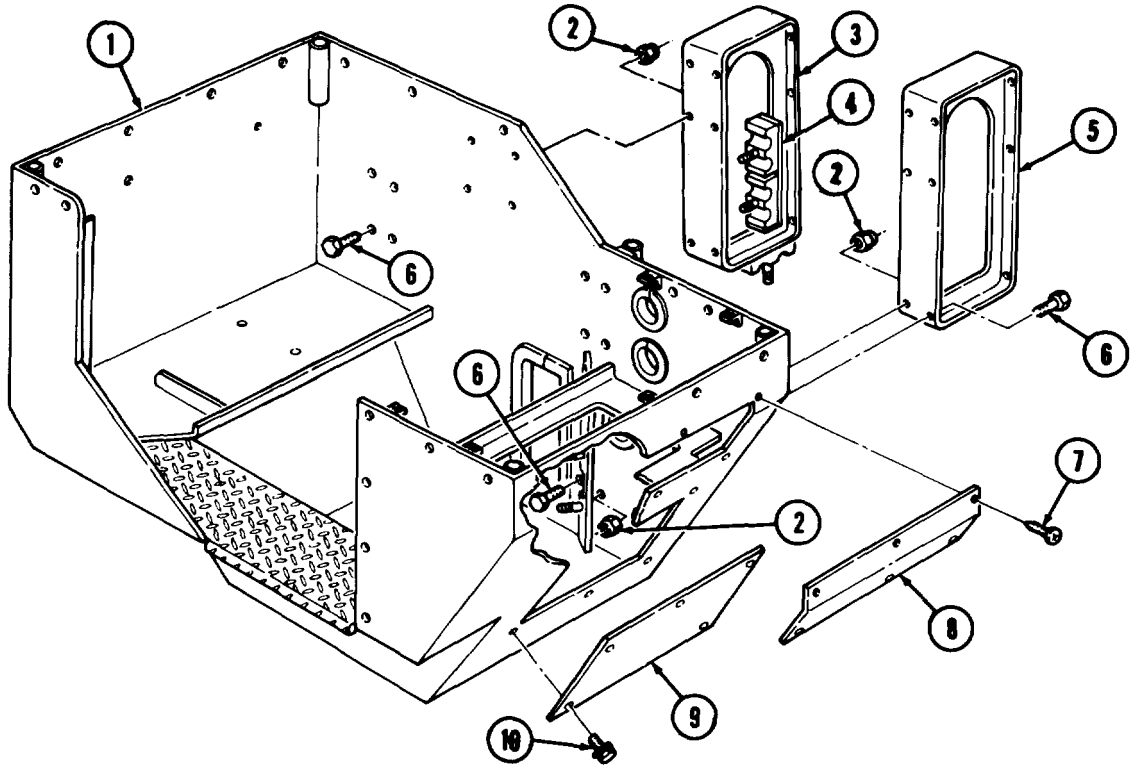

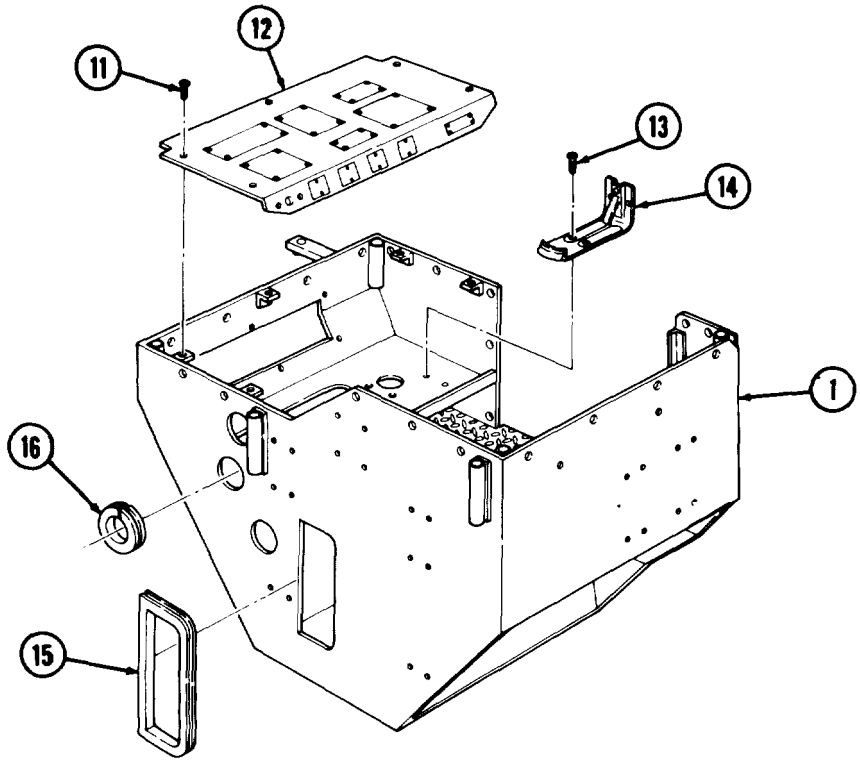

16-22. CRANE GONDOLA MAINTENANCE (M816) (Contd)

d. Assembly

NOTE

Perform step 1 if cover and data plates were removed during disassembly.

1. Install cover (2) on gondola body (5) with four screws (1).
2. Install oil can bracket (4) on gondola body (5) with two screws (3).
3. Install anti-chafing channel (6) on gondola body (5). Ensure gap in anti-chafing channel (6) faces up.
4. Install three new seals (7) on gondola body (5).
5. Install cover (15) on gondola body (5) with six screws (14).
6. Install cover (16) on gondola body (5) with six new screw-assembled Iockwashers (17).
7. Install bracket (10) on gondola body (5) with six screws (8) and new locknuts (9).
8. Install bracket (12) on gondola body (5) with six screws (13) and new locknuts (11).

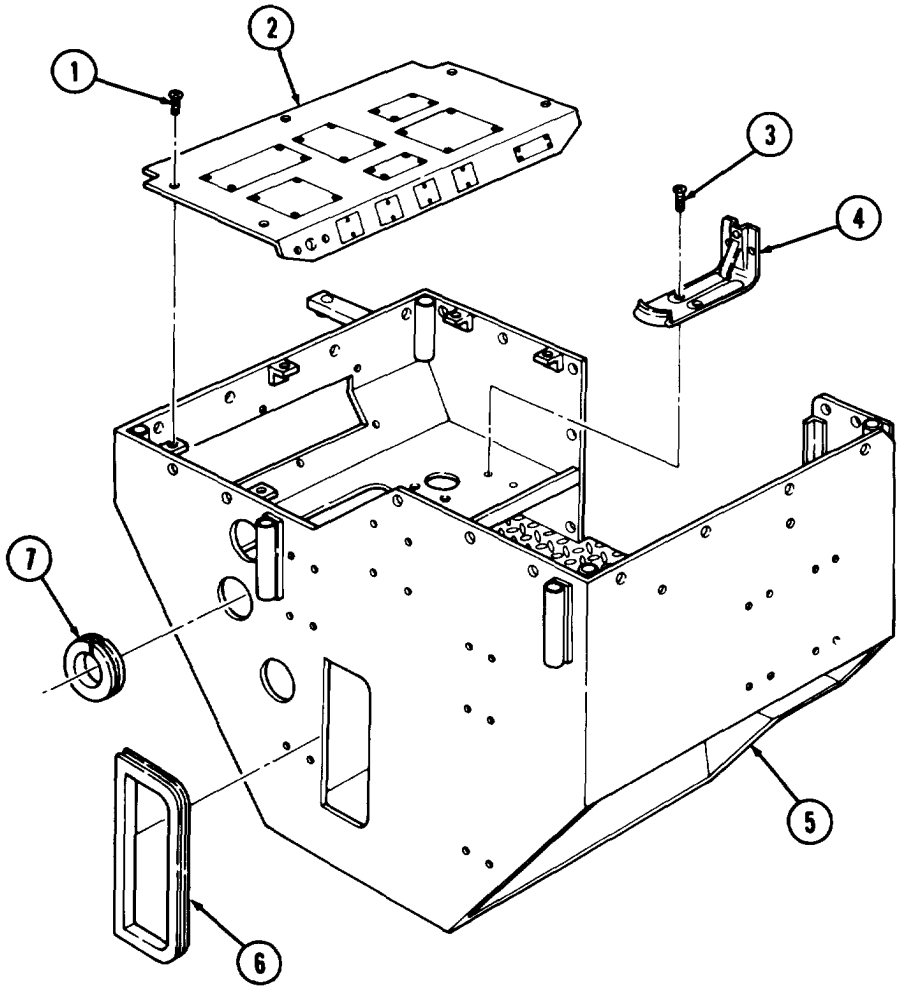

16-22. CRANE GONDOLA MAINTENANCE (M816) (Contd)

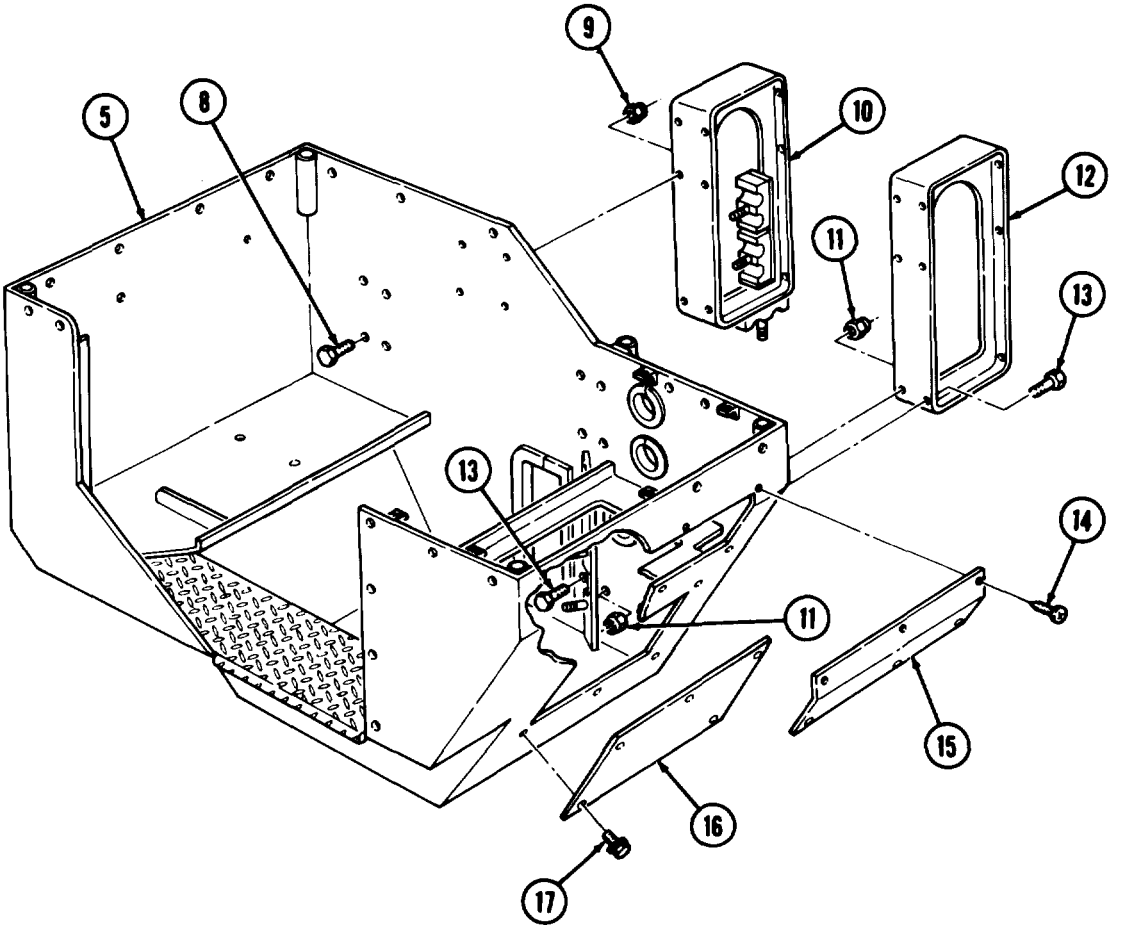

16-22. CRANE GONDOLA MAINTENANCE (M816) (Contd)

e. Installation

1. Attach chain to lifting device and gondola body (2).

WARNING

- All personnel must stand clear during lifting operations. A swinging or shifting load may cause injury to personnel.
- Ensure lifting capacity is greater than weight (500 lb (227 kg)) of crane gondola. Failure to do so may result in injury to personnel or damage to equipment.

NOTE

Assistant will help with steps 2 and 3.

2. Position gondola body (2) near boom support (1) and route two hoses (11) through bracket (16) and into gondola body (2).
3. Install gondola body (2) on boom support (1) using twelve new lockwashers (5) and screws (4). Tighten screws (4) 44-61 lb-ft (60-83 N•m).
4. Remove chain from lifting device and gondola body (2).
5. Route four hoses (15) through bracket (16) and into gondola body (2).
6. Install hoses (11) and (15) on brackets (14) and (16) with three clamps (9) and (13) and new locknuts (10) and (12).
7. Install tube (8) and hose (7) on crossover tee (17).
8. Install gondola guard (6) on gondola body (2).

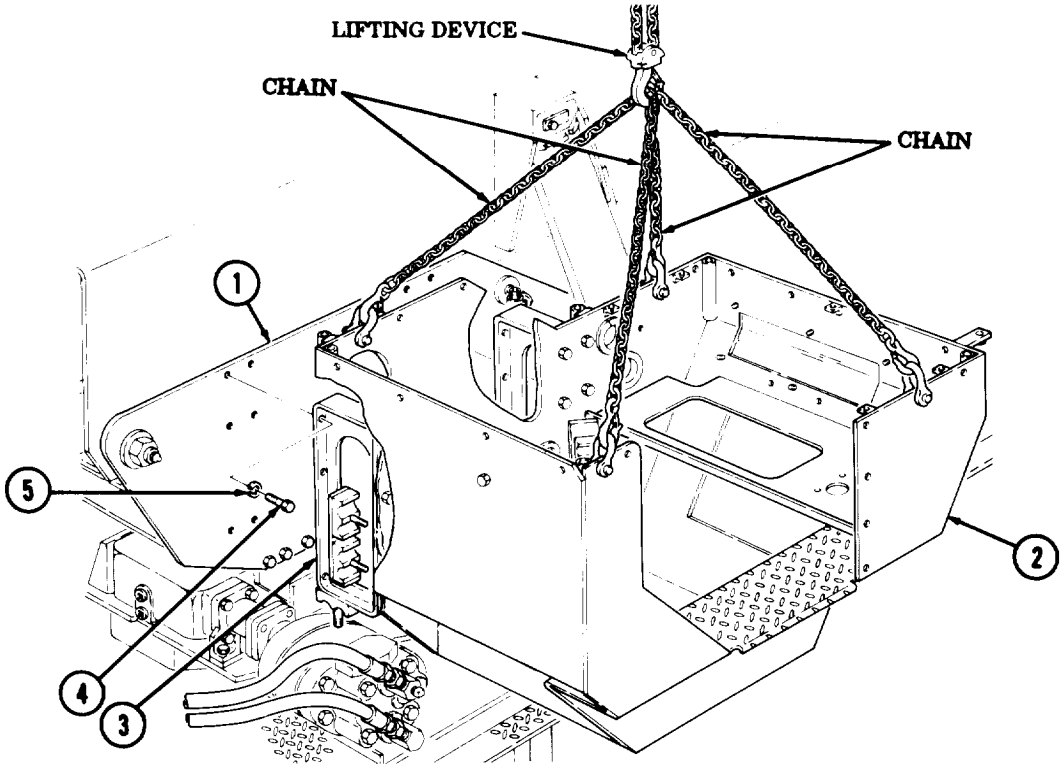

16-22. CRANE GONDOLA MAINTENANCE (M816) (Contd)

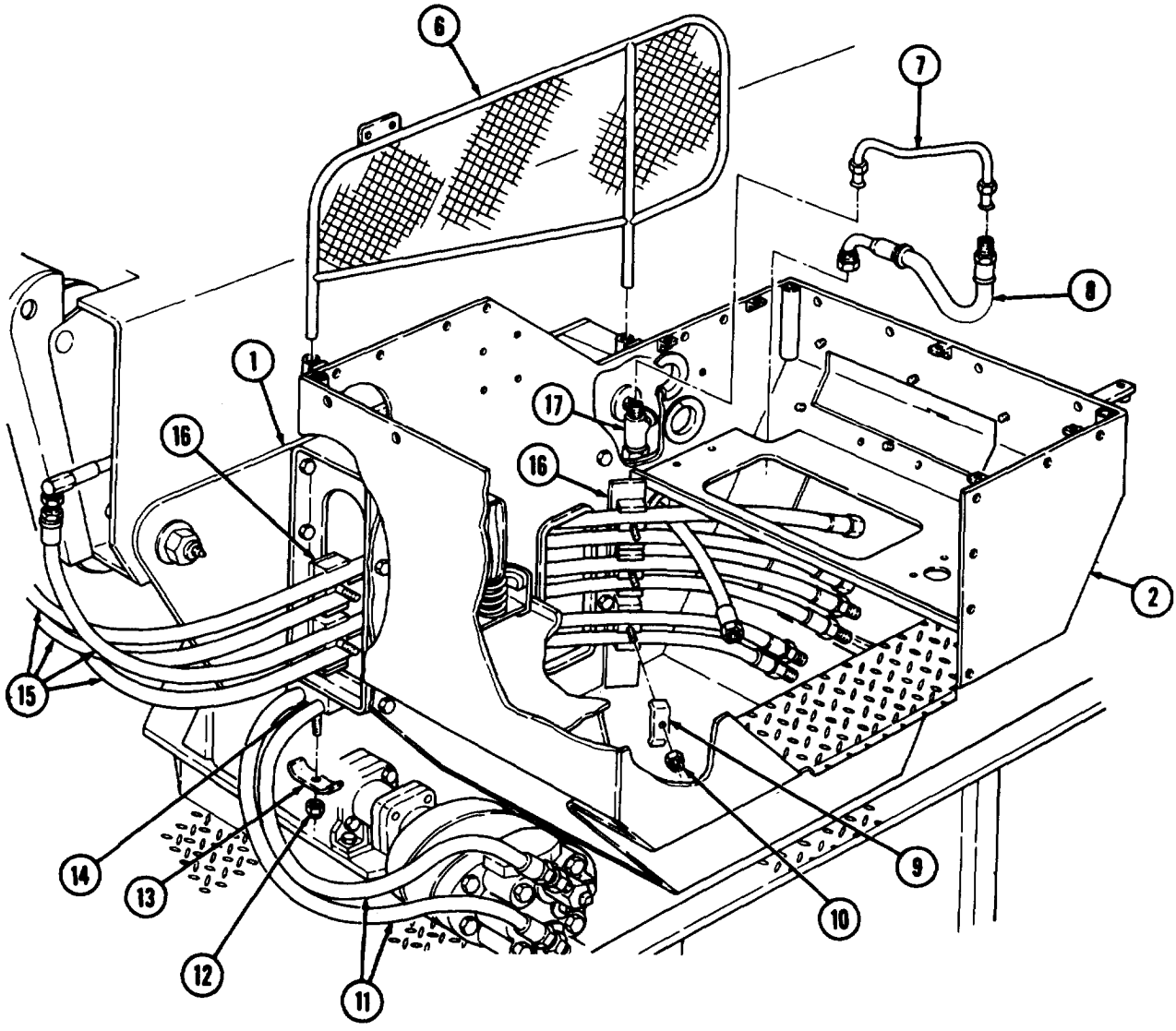

FOLLOW-ON TASKS:
- Install control valve (TM 9-2320-260-20).
- Fill oil reservoir (LO 9-2320-260-12).
- Start engine and check crane operation (TM 9-2320-260-10).
- Install floodlight wiring harness (TM 9-2320-260-20).
- Install gondola seat cushions (TM 9-2320-260-20).
- Install fire extinguisher brackets (TM 9-2320-260-20).

16-23. HOIST HYDRAULIC WINCH MOTOR REPLACEMENT (M816)

THIS TASK COVERS:

a. Removal **b. Installation**

INITIAL SETUP

APPLICABLE MODELS
M186

TOOLS
General mechanic's tool kit (Appendix B, Item 1)

MATERIALS/PARTS
Four lockwashers (Appendix D, Item 219)
Gasket (Appendix D, Item 84)
Woodruff key (Appendix D, Item 561)
Antiseize tape (Appendix C, Item 50)
Cap and plug set (Appendix C, Item 6)

REFERENCES (TM)
LO 9-2320-260-12
TM 9-2320-260-10
TM 9-2320-260-34P-2

EQUIPMENT CONDITION
- Parking brake set (TM 9-2320-260-10).
- Hydraulic system drained (LO 9-2320-260-12).

a. Removal

CAUTION

- Clean area around hoses and lines before removal to prevent entry of dirt. Damage will occur if dirt or dust enters system.
- Cap or plug all openings after disconnecting hoses and lines to prevent contamination. Failure to do so may result in damage to hydraulic system.

NOTE

- Have drainage container ready to catch oil.
- Tag hoses for installation.

1. Remove hoses (3) from elbows (4). Secure hoses (3) away from hydraulic winch motor (9).
2. Attach chain to hydraulic winch motor (9) and lifting device. Take up slack in chain.

NOTE

Assistant will help with step 3.

3. Remove four screws (1), lockwashers (2), hydraulic winch motor (9), and gasket (6) from flange (5). Discard lockwashers (2) and gasket (6).
4. Remove woodruff key (7) from shaft (8). Discard woodruff key (7).

NOTE

Perform step 5 if hydraulic winch motor is being replaced with a new unit.

5. Remove elbows (4) from hydraulic winch motor (9).
6. Remove chain from hydraulic winch motor (9) and lifting device.

b. Installation

1. Attach chain to hydraulic winch motor (9) and lifting device.

16-23. HOIST HYDRAULIC WINCH MOTOR REPLACEMENT (M816) (Contd)

NOTE

Perform step 3 if hydraulic winch motor is being replaced with a new unit.

2. Wrap male threads of two elbows (4) and hoses (3) with antiseize tape.
3. Install elbows (4) on hydraulic winch motor (9).
4. Install new woodruff key (7) on shaft (8).

NOTE

Assistant will help with step 5.

5. Install new gasket (6) and hydraulic winch motor (9) on flange (5) with four new lockwashers (2) and screws (1).
6. Remove chain from hydraulic winch motor (9) and lifting device.
7. Install hoses (3) on elbows (4).

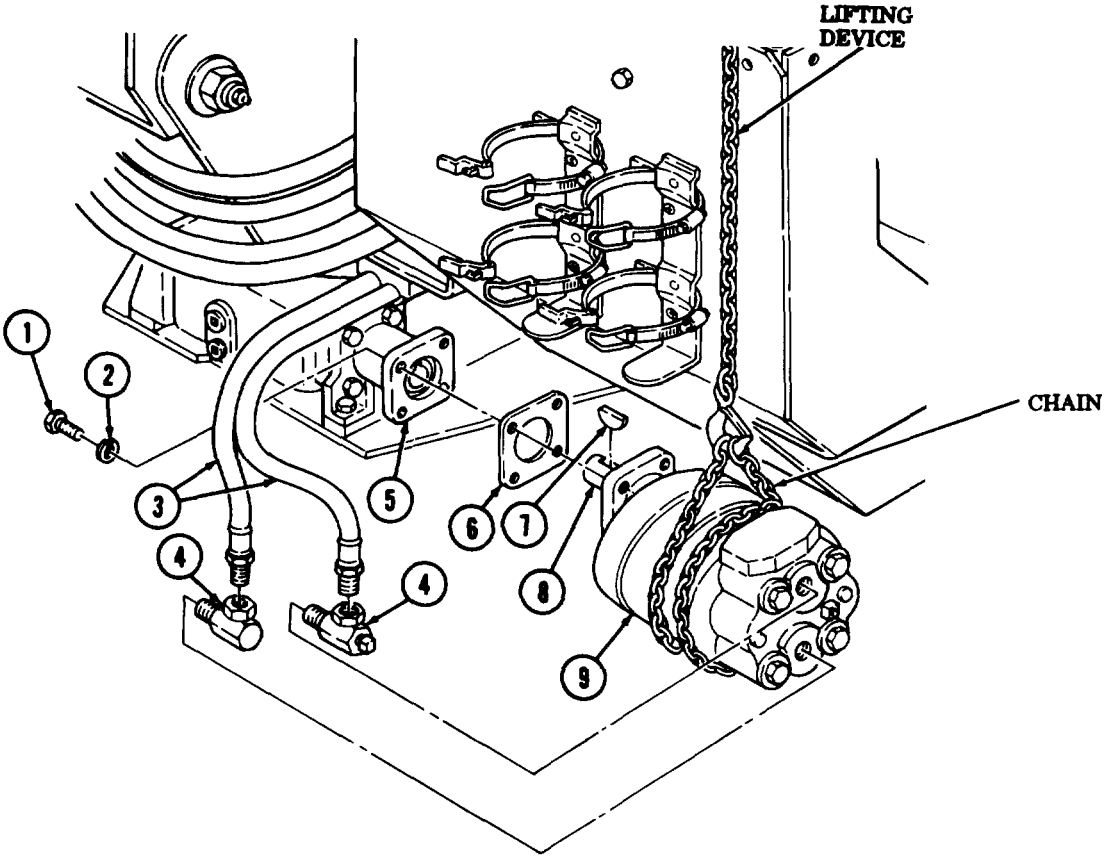

FOLLOW-ON TASKS:
- Fill hydraulic oil reservoir (LO 9-2320-260-12).
- Start engine and inspect for hydraulic leaks (TM 9-2320-260-10).
- Check crane operation (TM 9-2320-260-10).

16-24. HOIST HYDRAULIC PUMP AND SUPPORT MAINTENANCE (M816)

THIS TASK COVERS:

a. Removal
b. Cleaning, Inspection, and Repair
c. Installation

INITIAL SETUP

APPLICABLE MODELS
M816

TOOLS
General mechanic's tool kit (Appendix B, Item 1)
Torque wrench, 3/8-in. dr. (Appendix B, Item 4)
Soldering gun (Appendix B, Item 117)
Lifting device
Chain

MATERIALS/PARTS
Six lockwashers (Appendix D, Item 215)
Four lockwashers (Appendix D, Item 223)
Four lockwashers (Appendix D, Item 247)
Gasket (Appendix D, Item 86)

MATERIALS/PARTS (Contd)
Adhesive (Appendix C, Item 3)
Antiseize tape (Appendix C, Item 50)
Cap and plug set (Appendix C, Item 6)
Solder (Appendix C, Item 47)

REFERENCES (TM)
LO 9-2320-260-12
TM 9-2320-260-10
TM 9-2320-260-34P-2

EQUIPMENT CONDITION
- Parking brake set (TM 9-2320-260-10).
- Boom elevated, and shipper braces extended, locked, and installed (TM 9-2320-260-10).
- Hydraulic system drained (LO 9-2320-260-12).

a. Removal

NOTE

Perform steps 1 through 4 if boom will not elevate under its own power.

1. Attach chain to boom (1) and lifting device.
2. Disconnect shipper braces (2) from boom (1). Extend shipper braces (2) to maximum length, and lock in place.
3. Raise boom (1) to height of extended shipper braces (2), and attach shipper braces (2) to boom (1).
4. Remove chain from boom (1) and lifting device.

CAUTION

Clean area around hoses and lines before removal to prevent entry of dirt. Damage will occur is dirt or dust enters system.

NOTE

- Have drainage container ready to catch oil.
- Tag hoses for installation.

5. Remove hose (5) from oil filter (6).
6. Remove hoses (5) and (4) from hydraulic pump (3).
7. Remove four screws (7) and Iockwashers (18) from hydraulic pump (3). Discard lockwashers (18).

NOTE

Assistant will help with step 8.

8. Remove hydraulic pump (3) from support (10).

16-24. HOIST HYDRAULIC PUMP AND SUPPORT MAINTENANCE (M816) (Contd)

NOTE

Tag wires for installation.

9. Disconnect wires (13) from wiring harness (12).
10. Remove four screws (14), lockwashers (15), brush holder (16), and gasket (17) from support (10). Discard lockwashers (15) and gasket (17).

NOTE

Assistant will help with step 11.

11. Remove six screws (8), lockwashers (9), and support (10) from turntable (11). Discard lockwashers (9).

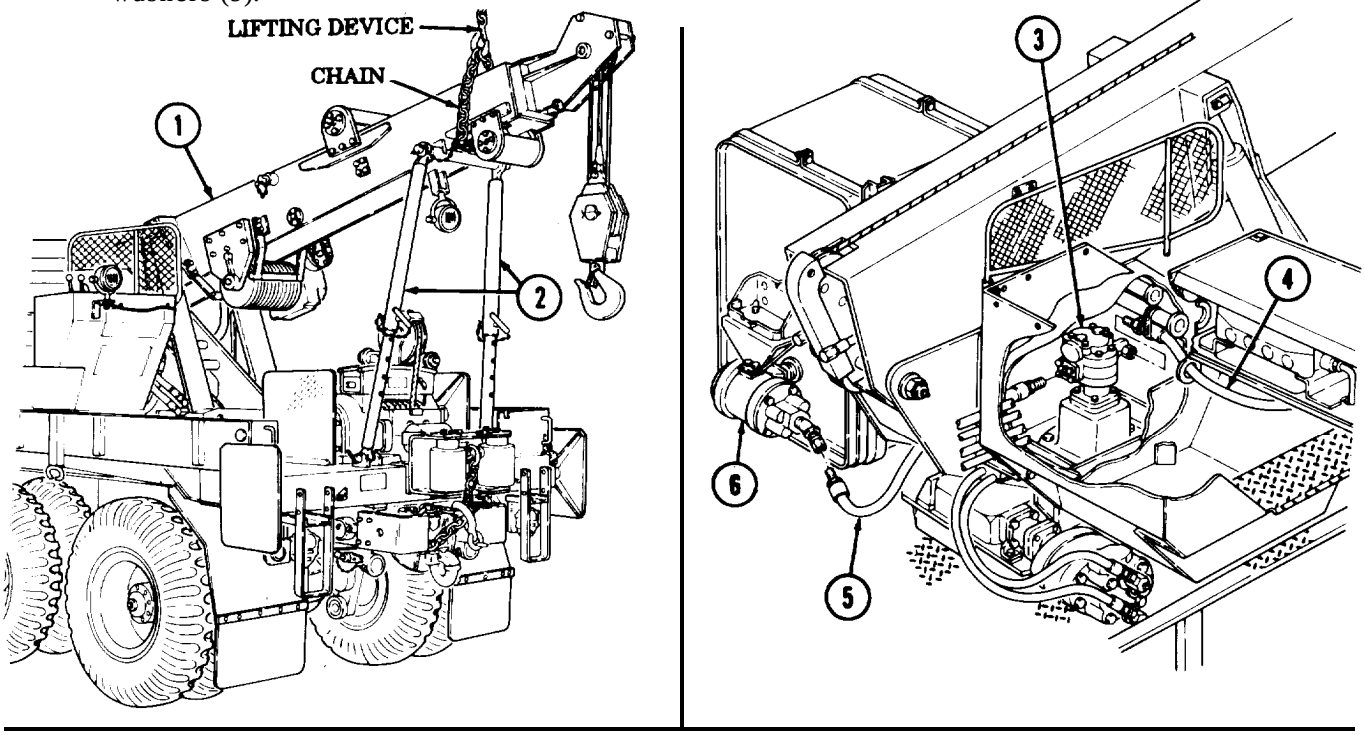

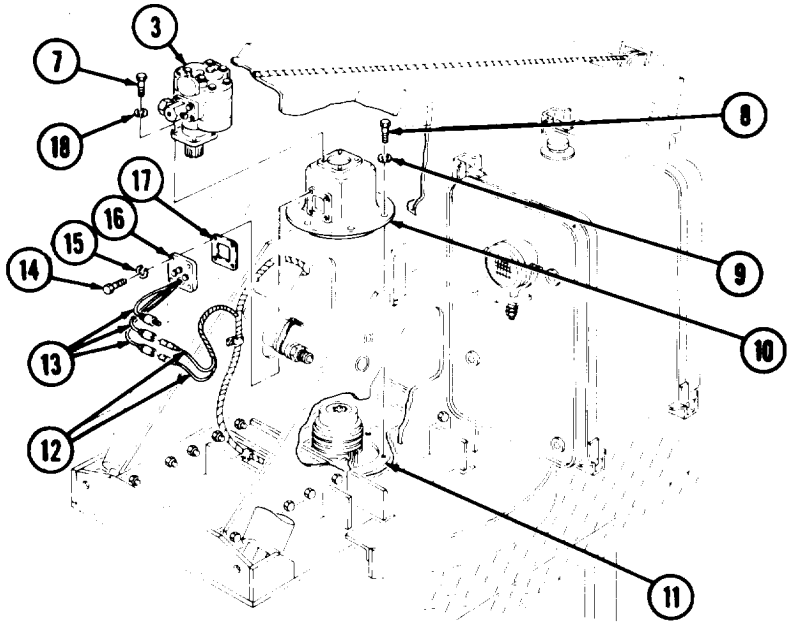

16-24. HOIST HYDRALIC PUMP AND SUPPORT MAINTENANCE (M816) (Contd)

b. Cleaning, Inspection, and Repair

1. For general cleaning instructions, refer to para. 2-8.
2. For general inspection instructions, refer to para. 2-9.
3. Inspect brush holder (1) for cracks, broken solder connections, and excessively worn brushes (3). Replace brush holder (1) if cracked, or if brushes (3) are worn. Repair broken solder connections.

NOTE

Perform steps 4 through 6 if brush holder is being replaced.

4. Install three brushes (3) in plate (2) by spreading cyanocrylate adhesive on contact surface of brush (3) and pushing brush (3) into place.
5. Inspect wires (5) in grommet (6), and install grommet (6) in plate (2). Solder wires (5) to springs (7) corresponding to the appropriate brush (3).
6. Install three brush covers (4) on plate (2).

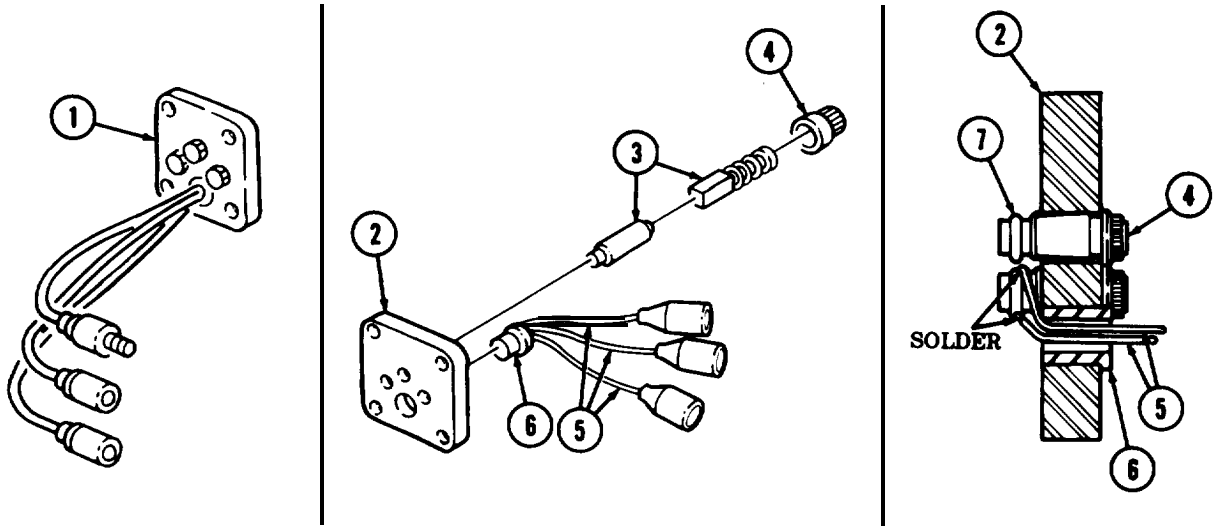

c. Installation

NOTE

Assistant will help with steps 1 and 2.

1. Install support (12) on turntable (13) with six new Iockwashers (11) and screws (10). Tighten screws (10) 25-31 lb-ft (34-42 N•m).
2. Install hydraulic pump (9) on support (12) with four new lockwashers (18) and screws (8). Tighten screws (8) 44-61 lb-ft (60-83 N•m).
3. Install new gasket (17) and brush holder (1) on support (12) with four new lockwashers (16) and screws (15).
4. Connect wires (5) to wiring harness (14).
5. Wrap male threads on hoses (19) and (20) with antiseize tape.
6. Install hoses (19) and (20) on hydraulic pump (9).
7. Install hose (20) on oil filter (21).

16-24. HOIST HYDRAULIC PUMP AND SUPPORT MAINTENANCE (M816) (Contd]

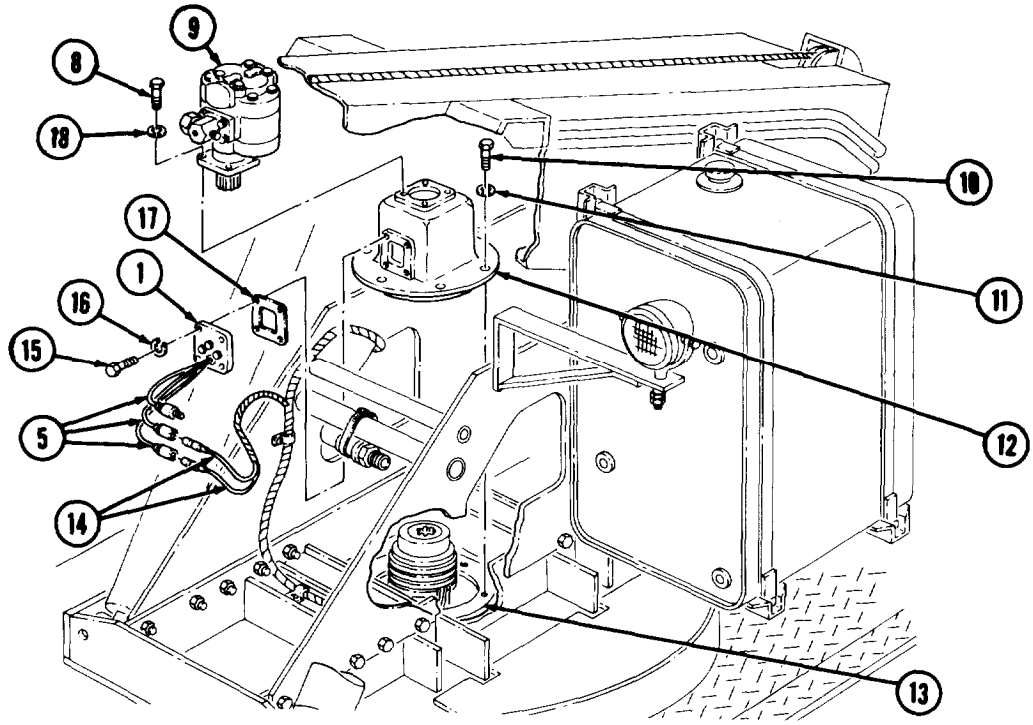

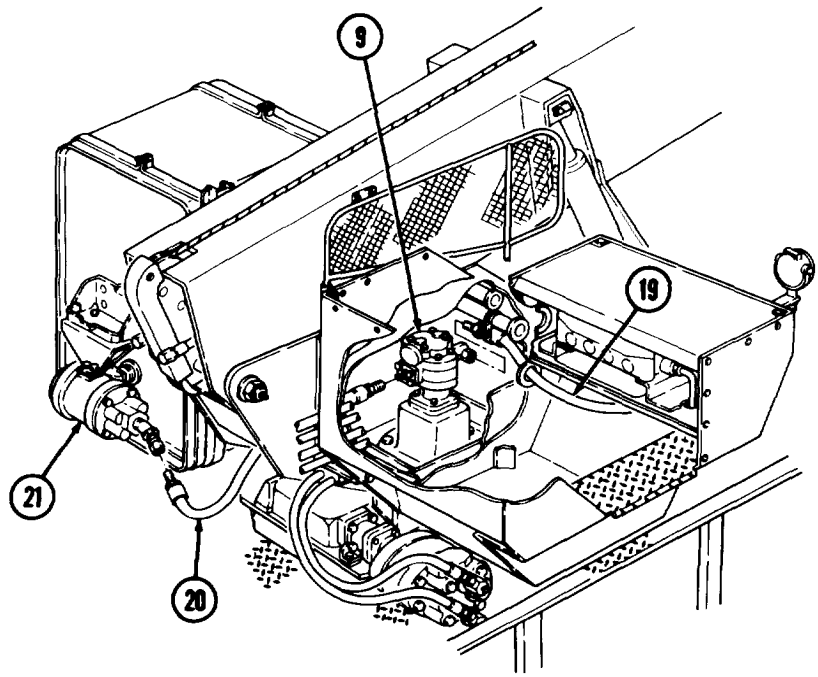

FOLLOW-ON TASKS:
- Fill hydraulic system (LO 9-2320-260-12).
- Start engine and check operation of hydraulic system (TM 9-2320-260-10).
- Lower boom and retract shipper braces (TM 9-2320-260-10).

16-25. HOIST BEVEL GEARCASE REPAIR (M816)

THIS TASK COVERS:

a. Removal
b. Disassembly
c. Cleaning and Inspection
d. Repair
e. Assembly
f. Installation

INITIAL SETUP

APPLICABLE MODELS
M816

TOOLS
General mechanic's tool kit (Appendix B, Item 1)
Mechanical puller kit (Appendix B, Item 14)
3/8-in. torque wrench (Appendix B, Item 4)
Arbor press (Appendix B, Item 7)
Hydraulic jack

MATERIALS/PARTS
Twenty-four lockwashers (Appendix D, Item 215)
Two lockwashers (Appendix D, Item 223)
Lockwasher (Appendix D, Item 227)
Gasket (Appendix D, Item 66)
Gasket (Appendix D, Item 88)
Gasket (Appendix D, Item 102)
Seal (Appendix D, Item 462)
Two woodruff keys (Appendix D, Item 562)
Shims (Appendix D, Item 503)

MATERIALS/PARTS (Contd)
Grommet (Appendix D, Item 157.1)
Shims (Appendix D, Item 501)
Iron base pigment (Appendix C, Item 26)
Gear oil (Appendix C, Item 22)

REFERENCES (TM)
LO 9-2320-260-12
TM 9-2320-260-20
TM 9-2320-260-34P-2

EQUIPMENT CONDITION
- Hydraulic oil reservoir removed (TM 9-2320-260-20).
- Crane drive propeller shaft removed (TM 9-2320-260-20).
- Boom assembly removed (para. 16-18).
- Crane gondola removed (para. 16-22).
- Boom elevating cylinders removed (para. 16-14).
- Hoist hydraulic pump assembly and support removed (para. 16-24).
- Crane gearcase removed (para. 16-28).

a. Removal

NOTE

Have container ready to catch oil.

1. Remove two plugs (10), and drain oil from gearcase (9) and input shaft housing (11).
2. Install plugs (10) in gearcase (9) and input shaft housing (11).

NOTE

Tag wires for installation.

3. Disconnect. two wires (7) from wire harness (8). (Third wire (14) is not connected.)

NOTE

Assistant will help with steps 4 through 9.

4. Position hydraulic jack under gearcase (9) and input drive housing (11).
5. Remove six screws (4) and lockwashers (3) from inner circle holes of housing flange (6). Discard lockwashers (3).
6. Remove gearcase (9) and input drive housing (11) from wrecker body (13).
7. Remove gasket (12) from gearcase (9). Discard gasket (12).
8. Remove six screws (2) and lockwashers (1) from housing flange (6). Discard lockwashers (1).
9. Remove housing (5) from wrecker body (13).

16-25. HOIST BEVEL GEARCASE REPAIR (M816) (Contd)

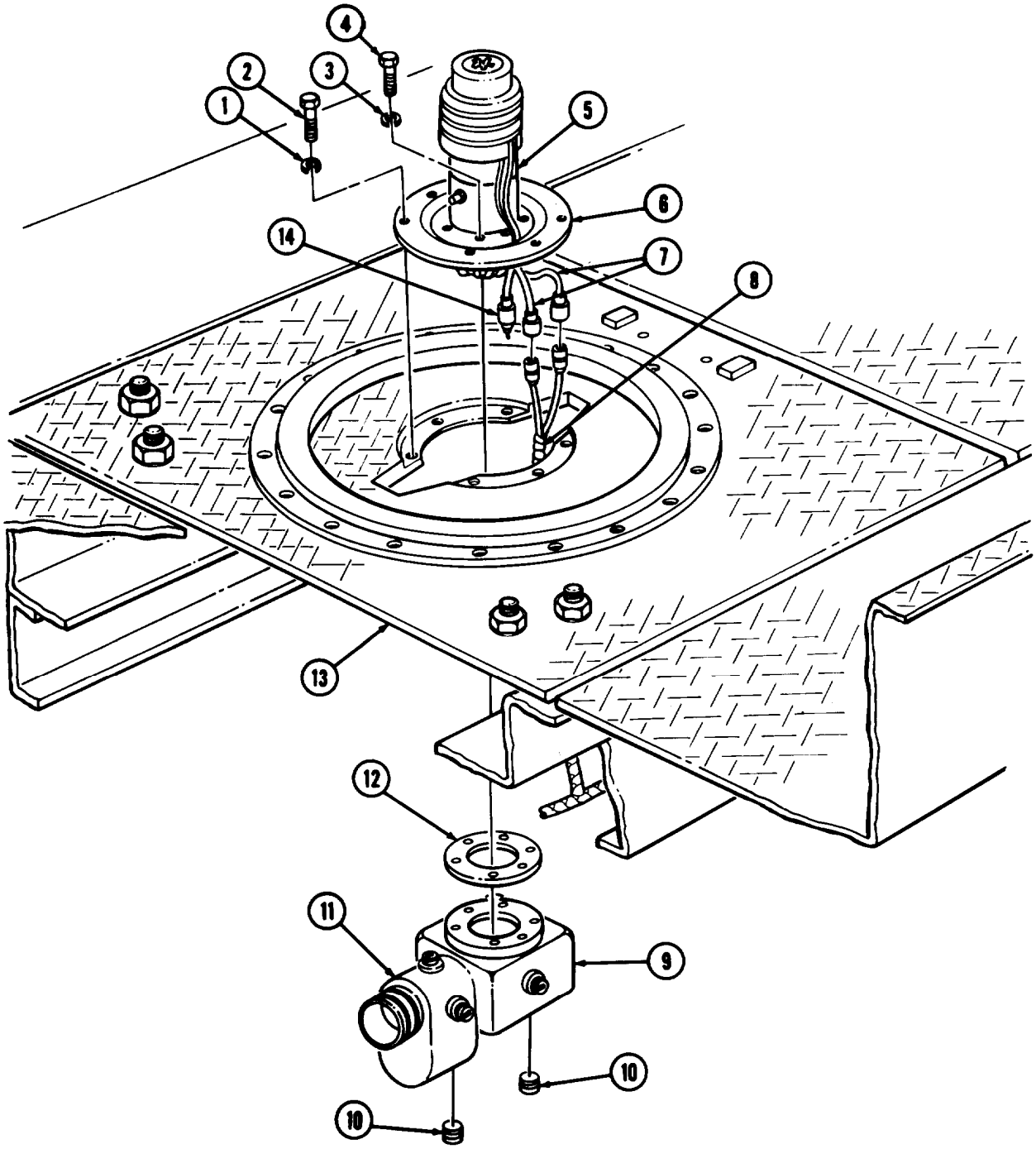

16-25. HOIST BEVEL GEARCASE REPAIR (M816) (Contd)

b. Disassembly

1. Remove driveshaft coupling (5) from driveshaft (14).
2. Pull three electrical leads (9) through grommet (10), and remove grommet (10) from flange (11) of housing (13). Discard grommet (10).
3. Remove screw (8), lockwasher (7), and ring support (6) from housing (13). Discard lockwasher (7).
4. Remove snapring (1), four screws (2), lockwashers (3), cap (4), and gasket (15) from driveshaft (14) and housing (13). Discard lockwashers (3) and gasket (15).
5. Remove seal (16) from cap (4). Discard seal (16).
6. Remove breather (12) from housing (13).

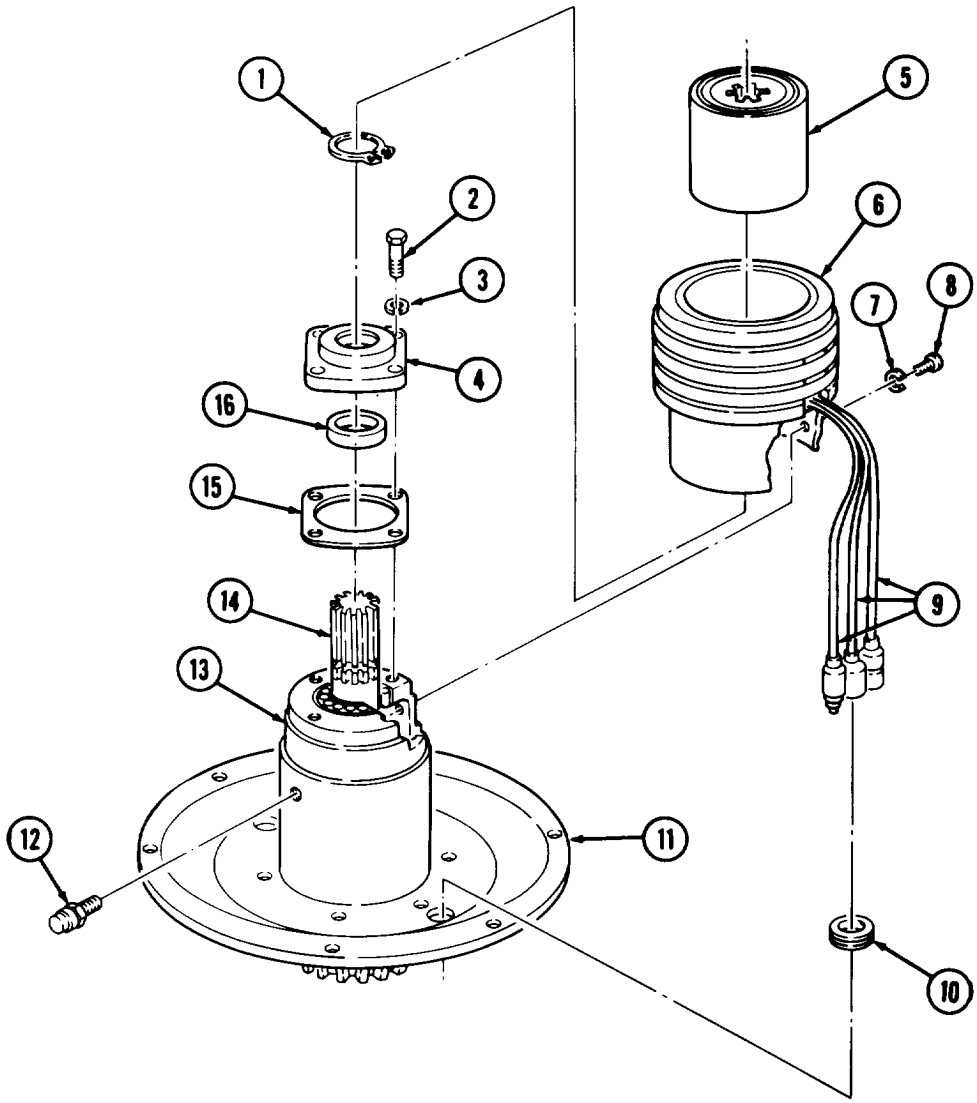

16-25. HOIST BEVEL GEARCASE REPAIR (M816) (Contd)

7. Remove screw (23), lockwasher (22), and washer (21) from driveshaft (14). Discard lockwashers (22).

NOTE

Tag gear and shaft for installation.

8. Using puller, remove bevel gear (20) and woodruff key (19) from driveshaft (14). Discard woodruff key (19).
9. Remove snapring (24) from housing (13).
10. Using arbor press, press driveshaft (14) toward gearcase end of housing (13) until bearing (18) clears housing (13).
11. Using puller, remove bearing (18) from driveshaft (14).
12. Using arbor press, turn housing (13) over, and press driveshaft (14) and bearing (17) out of pump end of housing (13).
13. Using arbor press or mechanical puller, remove bearing (17) from drive shaft (14).
14. Remove screw (25), lockwasher (26), washer (27), yoke (28), and spacer (29) from input shaft (30). Discard lockwasher (26).

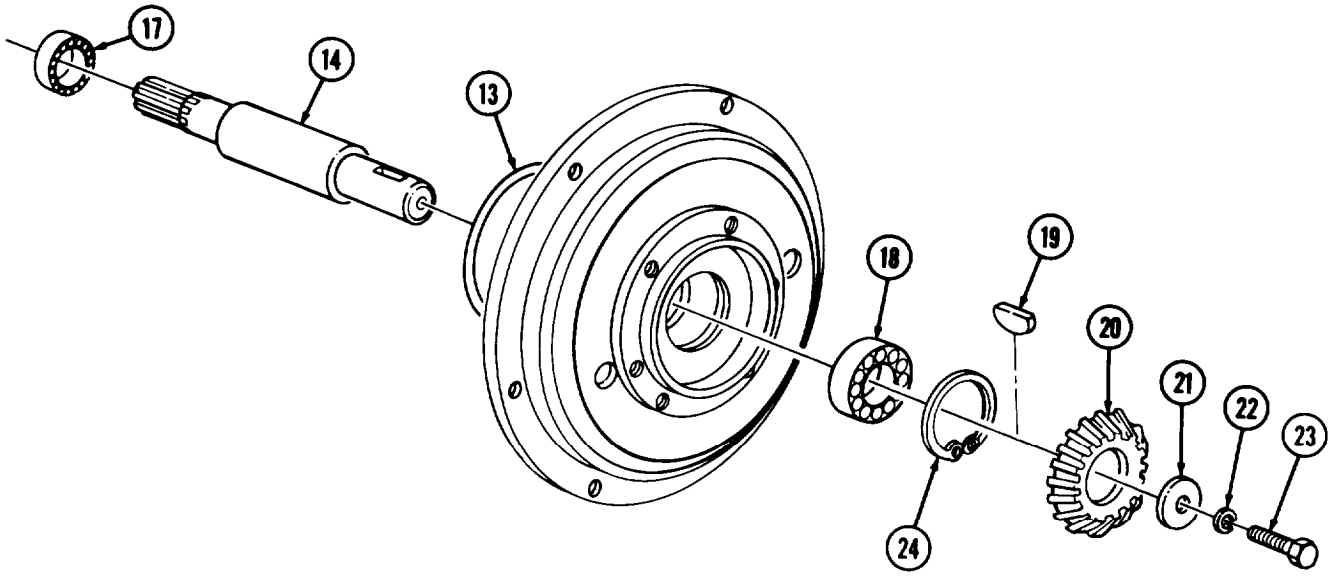

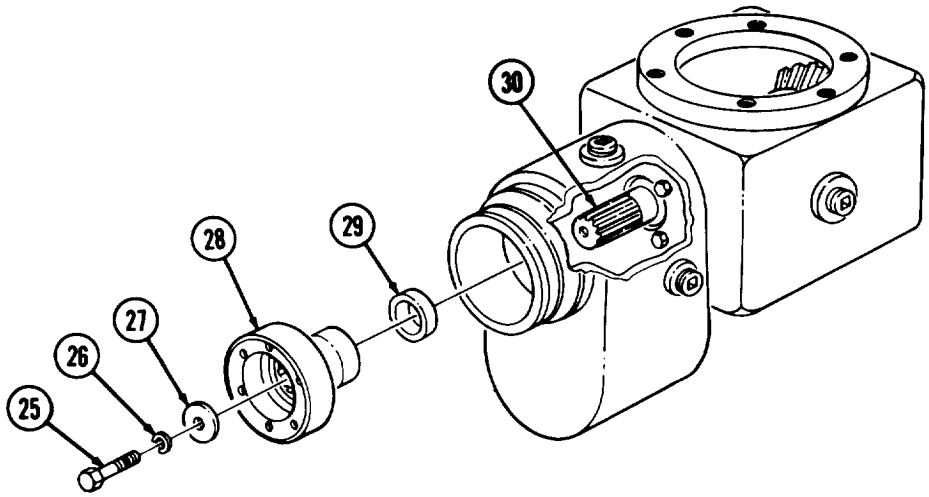

16-25. HOIST BEVEL GEARCASE REPAIR (M816) (Contd)

15. Remove two plugs (11), three plugs (10), and plugs (16) and (20) from gearcase housing (12) and input drive housing (15).
16. Remove four screws (7), lockwashers (6), cover (5), shims (8), and gasket (9) from gearcase housing (12). Discard lockwashers (6) and gasket (9).
17. Using micrometer, measure and record thickness of shims (8). Discard shims (8).
18. Remove four screws (13), lockwashers (14), input drive housing (1), gasket (17), and shims (18) from gearcase housing (12). Discard lockwashers (14) and gasket (17).
19. Using arbor press, press input shaft (1) and bearing (4) until bearing (4) clears gearcase housing (12).
20. Using micrometer, measure and record thickness of shims (18). Discard shims (18).
21. Using mechanical puller, remove bearing (19) from input shaft (1).
22. Remove bearing (4), bevel gear (3), and input shaft (1) from top of gearcase housing (12).
23. Using mechanical puller, remove bearing (4) from input shaft (1).

NOTE

Tag gear and shaft for installation.

24. Using arbor press, remove bevel gear (3) and woodruff key (2) from input shaft (1). Discard woodruff key (2).

c. Cleaning and Inspection

1. For general cleaning instructions, refer to para. 2-8.
2. For general inspection instructions, refer to para. 2-9.
3. Inspect housing (21), gearcase housing (12), input shaft (1), and driveshaft (23) for cracks, bends, breaks, and wear. Refer to table 16-14, Hoist Bevel Gearcase Wear Limits, for measurements. Replace housing (21), gearcase housing (12), input shaft (1), and driveshaft (23), if damaged or worn.
4. Inspect front and rear bearings (4) and (19), upper bearing (24), and lower bearing (22) for wear. Refer to table 16-14, Hoist Gearcase Wear Limits, for measurements. Replace front and rear bearings (4) and (19), upper bearing (24), and lower bearing (22), if worn.

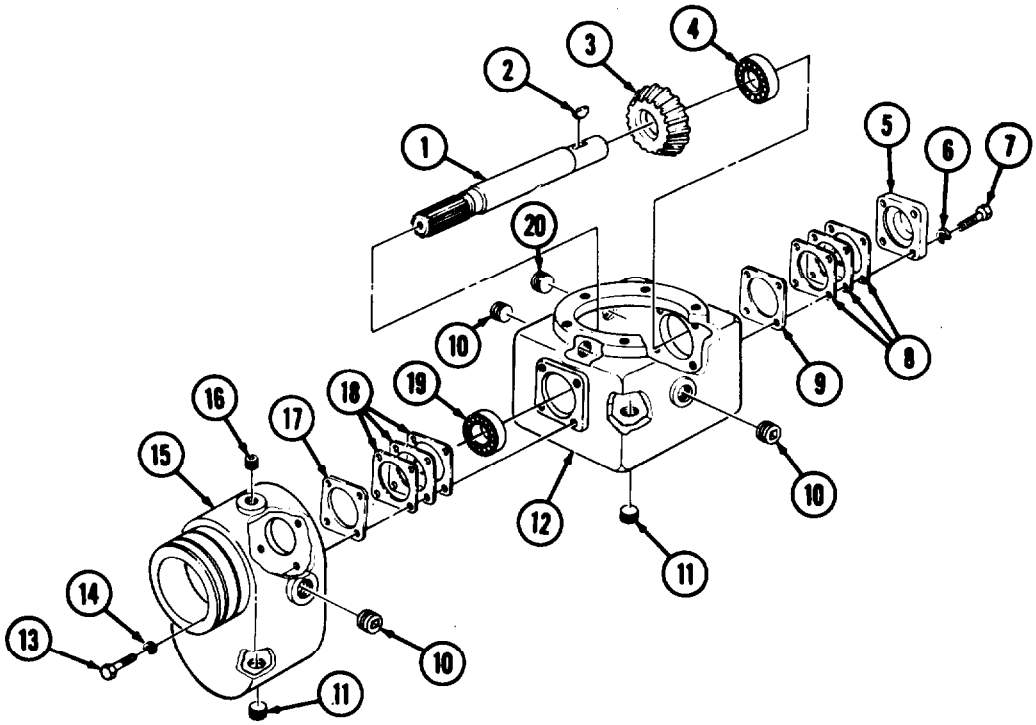

16-25. HOIST BEVEL GEARCASE REPAIR (M816) (Contd)

d. Repair

1. For general repair instructions, refer to para. 2-10.
2. For testing and replacement of ring support assembly (25), refer to para. 16-27.

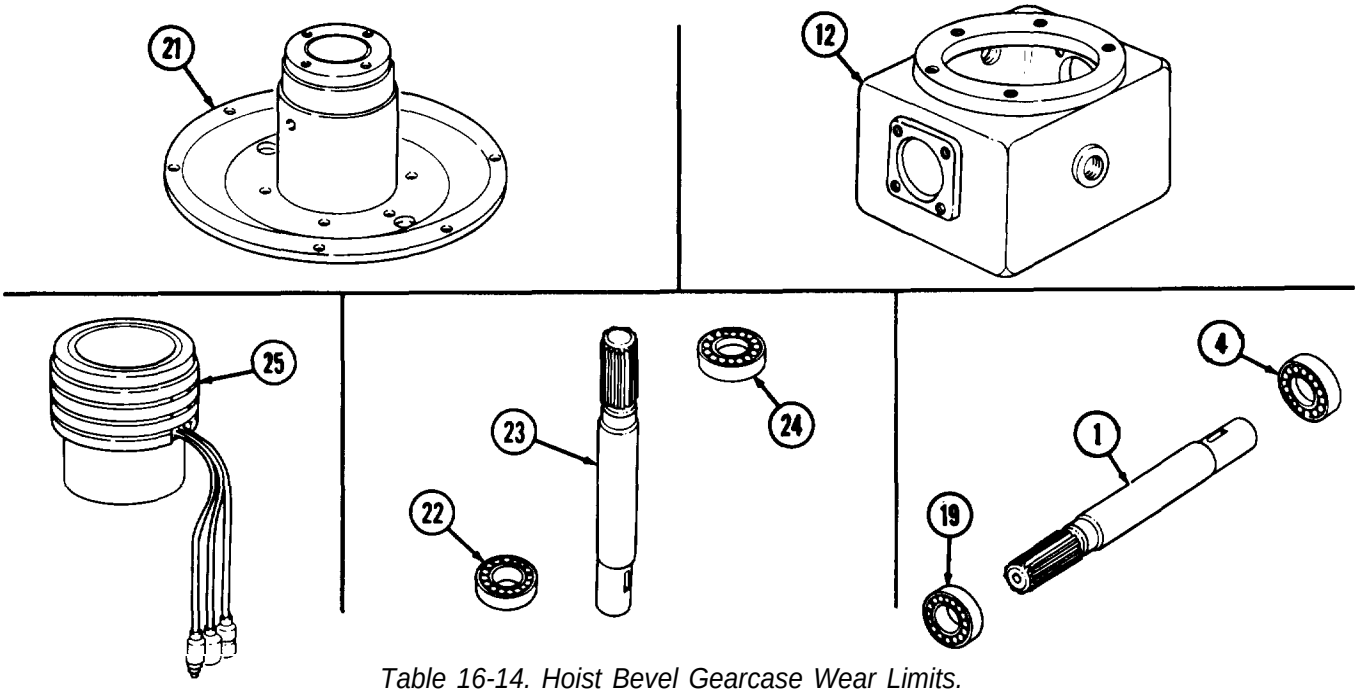

Table 16-14. Hoist Bevel Gearcase Wear Limits.

ITEM NO.	ITEM/POINT OF MEASUREMENT	WEAR LIMITS/TOLERANCES	
		INCHES	MILLIMETERS
1	Input shaft – front and rear bearing journals – minimum	1.575	40.01
4,19	Front and rear bearings		
	Inner diameter - maximum	1.547	39.29
	Outer diameter - minimum	3.149	79.98
12	Gearcase housing-front and rear bearing bores - maximum	3.150	80.01
21	Housing		
	Upper bearing bore - maximum	2.835	72.01
	Lower bearing bore - maximum	3.150	80.01
22	Lower bearing		
	Inner diameter - maximum	1.574	39.98
	Outer diameter - minimum	2.835	72.01
23	Driveshaft		
	Upper bearing journal - minimum	1.379	35.03
	Lower bearing journal - minimum	1.575	40.01
24	Upper bearing		
	Inner diameter - maximum	1.375	34.93
	Outer diameter - minimum	2.834	71.98

16-25. HOIST BEVEL GEARCASE REPAIR (M816) (Contd)

e. Assembly

NOTE

Coat bearings with gear oil before assembly.

1. Install new woodruff key (9) on input shaft (7), and press bevel gear (10) on input shaft (7) using arbor press. Seat bevel gear (10) to shoulder (8) of input shaft (7).
2. Position input shaft (7) and bevel gear (10) in gearcase housing (17) with splined end of input shaft (7) protruding through front bearing bore (18).

NOTE

Assistant will help with steps 3 through 6.

3. Using arbor press, install bearing (24) on input shaft (7). Seat bearing (24) to shoulder (6) of input shaft (7).
4. Using arbor press, install bearing and input shaft (7) on gearcase housing (17) until inner edge of bearing (24) is even with inner edge of gearcase housing (17).
5. Using arbor press, install bearing (11) on input shaft (7) and gearcase housing (17). Seat bearing (11) to bevel gear (10).

NOTE

Use new shims of same thickness as shims removed.

6. Install new shims (19), new gasket (20), and input drive housing (21) on gearcase housing (17) with four new lockwashers (23) and screws (22). Tighten screws (22) 25-33 lb-ft (34-45 N•m).
7. Install spacer (5) and yoke (4) on input shaft (7) with washer (3), new lockwasher (2), and screw (1). Tighten screw (1) 29-33 lb-ft (39-45 N•m).
8. Install new gasket (16), new shim (15), and cover (12) on gearcase housing (17) with four new lockwashers (13) and screws (14). Tighten screws (14) 25-33 lb-ft (34-45 N•m).

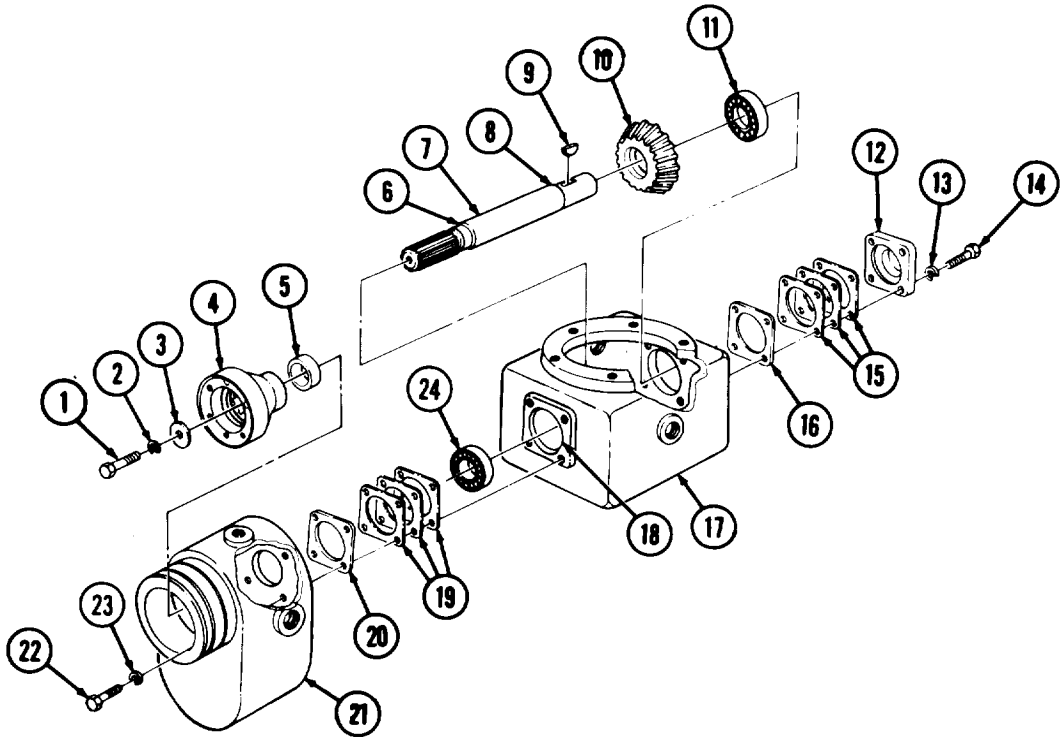

16-25. HOIST BEVEL GEARCASE REPAIR (M816) (Cont'd)

Using arbor press, install bearing (35) on driveshaft (28). Seat bearing (35) to shoulder (36) of driveshaft (28).

10. Using arbor press, install dnveshaft (28) and bearing (35) on gearcase end of housing (27).
11. Install snapring (34) on housing (27).
12. Install new woodruff key (29) and bevel gear (30) on driveshaft (28) with washer (31), new lockwasher (32), and screw (33). Tighten screw (33) 29-33 lb-ft (39-45 N•m).
13. Using arbor press, install bearing (38) on driveshaft (28) and pump end of housing (27). Seat bearing (38) to shoulder (37) of driveshaft (28).
14. Using arbor press, install new seal (40) on cap (41).
15. Install new gasket (39) and cap (41) on driveshaft (28) and housing (27) with four new lockwashers (26) and screws (25). Tighten screws (25) 29-33 lb-ft (39-45 N•m).

NOTE

Clean oil from tooth contact surfaces of bevel gears.

16. Coat contact surfaces of four to eight teeth of bevel gear (30) with blue iron base pigment.
17. With bevel gears (10) and (30) alined, install new gasket (44) and housing (27) on gearcase housing (17) with six new lockwashers (43) and screws (42). Tighten screws (42) 25-33 lb-ft (34-45 N•m).
18. Turn driveshaft (28) two full turns and remove six screws (42), lockwashers (43), and housing (27) from gearcase housing (17).

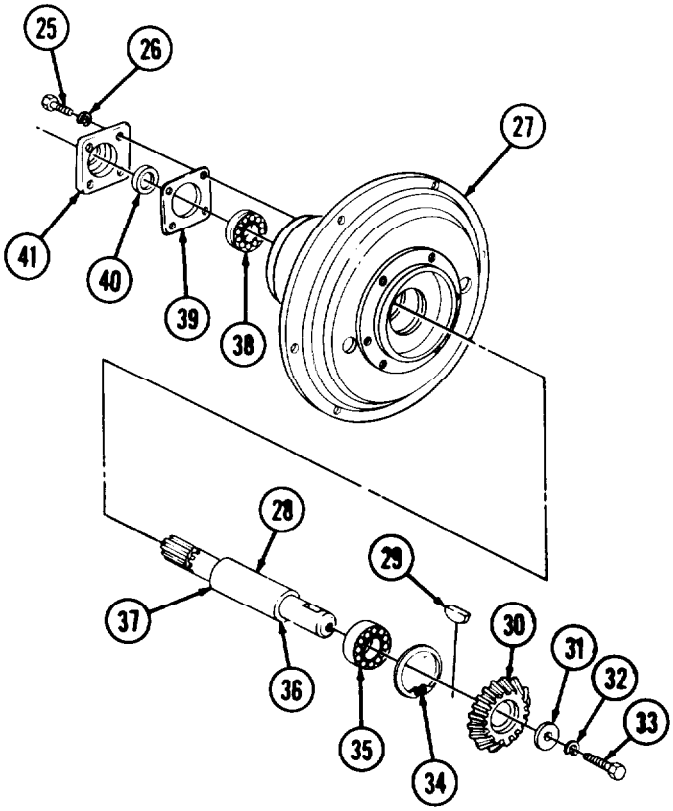

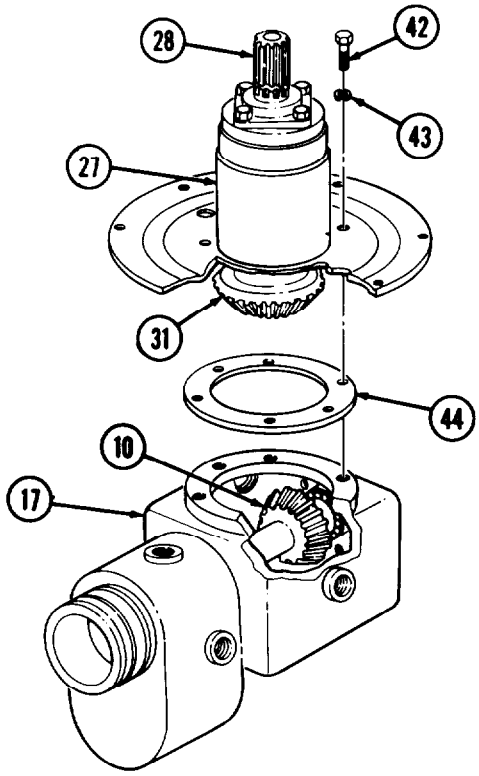

16-25. HOIST BEVEL GEARCASE REPAIR (M816) (Contd)

19. Examine pigment pattern on teeth of bevel gear (12). Compare pigment patterns to examples below:
    a. If pattern most resembles example A, no further adjustments are necessary. Go to step 22.
    b. If pattern most resembles example B, gears (10) and (12) are meshing too deeply. Go to step 20.
    c. If pattern most resembles example C, gears (10) and (12) are not meshing deep enough. Go to step 21.
20. Remove four screws (7), lockwashers (8), cover (6), gasket (5), and shims (4) from gearcase housing (9). Add shim(s), and repeat step 8 and steps 16 through 19.
21. Remove four screws (7), lockwashers (8), cover (6), gasket (5), and shims (4) from gearcase housing (9). Subtract shim(s) and repeat step 8 and steps 16 through 19.
22. Thoroughly clean bevel gears (10) and (12). Ensure no pigment remains on teeth.
23. Aline bevel gears (10) and (12) and install housing(1) on gearcase housing (9) with six new lockwashers (3) and screws (2). Tighten screws (2) 25-33 lb-ft (34-45 N•m).
24. Install dial indicator with extension on gearcase housing (9) and gear (12). Ensure extension contacts gear (12) on outer edge of tooth.
25. Zero dial indicator by holding driveshaft (13) and turning yoke (14) counterclockwise.
26. Turn yoke (14) clockwise until resistance is felt.
27. Read backlash on dial indicator. Backlash should be 0.004-0.008 in (0. 10-0.20 mm). If backlash is incorrect, replace worn bevel gears (10) and (12).
28. Remove six screws (2), lock washers (3), housing (1), and new gasket (11) from gearcase housing (9).

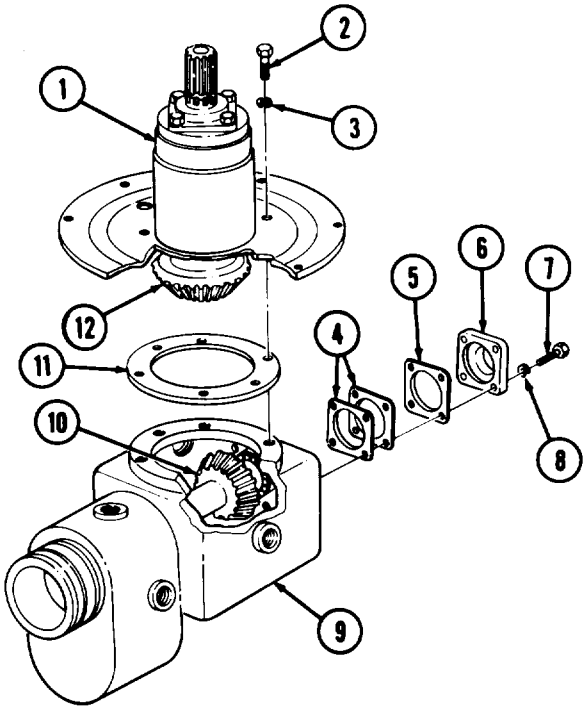

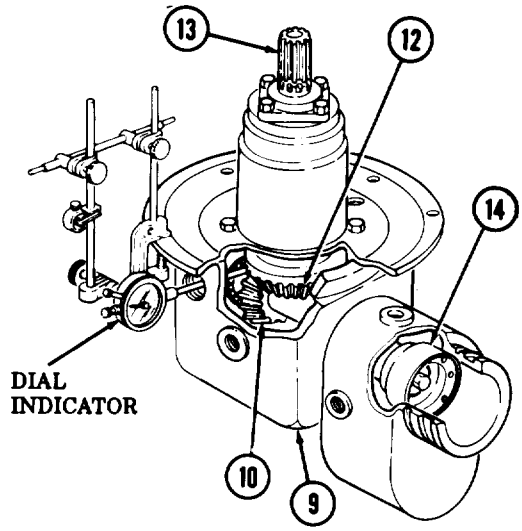

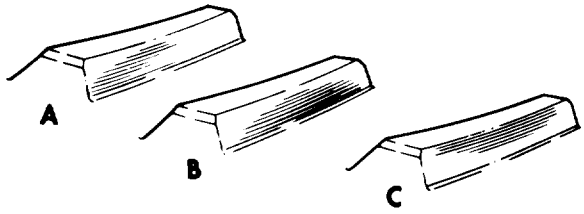

PIGMENT PATTERNS

16-25. HOIST BEVEL GEARCASE REPAIR (M816) (Contd)

29. Install snapring (28) in notch on driveshafl (13).
30. Install breather (27) in side of housing (1).
31. Aline hole (21) inside of ring support assembly (18) with hole (24) in side of housing (1), place ring support assembly (18) on housing (1), and install with new lockwasher (19) and screw (20).
32. Slide three wire leads (22), one at a time, through new grommet (23), and slide grommet (23) up wire leads (22).
33. Cut notch in upper lip of grommet (23), and install grommet (23) and three wire leads (22) through hole (25) of flange plate (26). Aline notch to clear head of screw to be installed in flange plate (26) at installation.
34. Aline splines of coupling (17) with splines of driveshaft (13), and slide coupling (17) onto driveshaft (13). Seat coupling (17) against snapring (28).

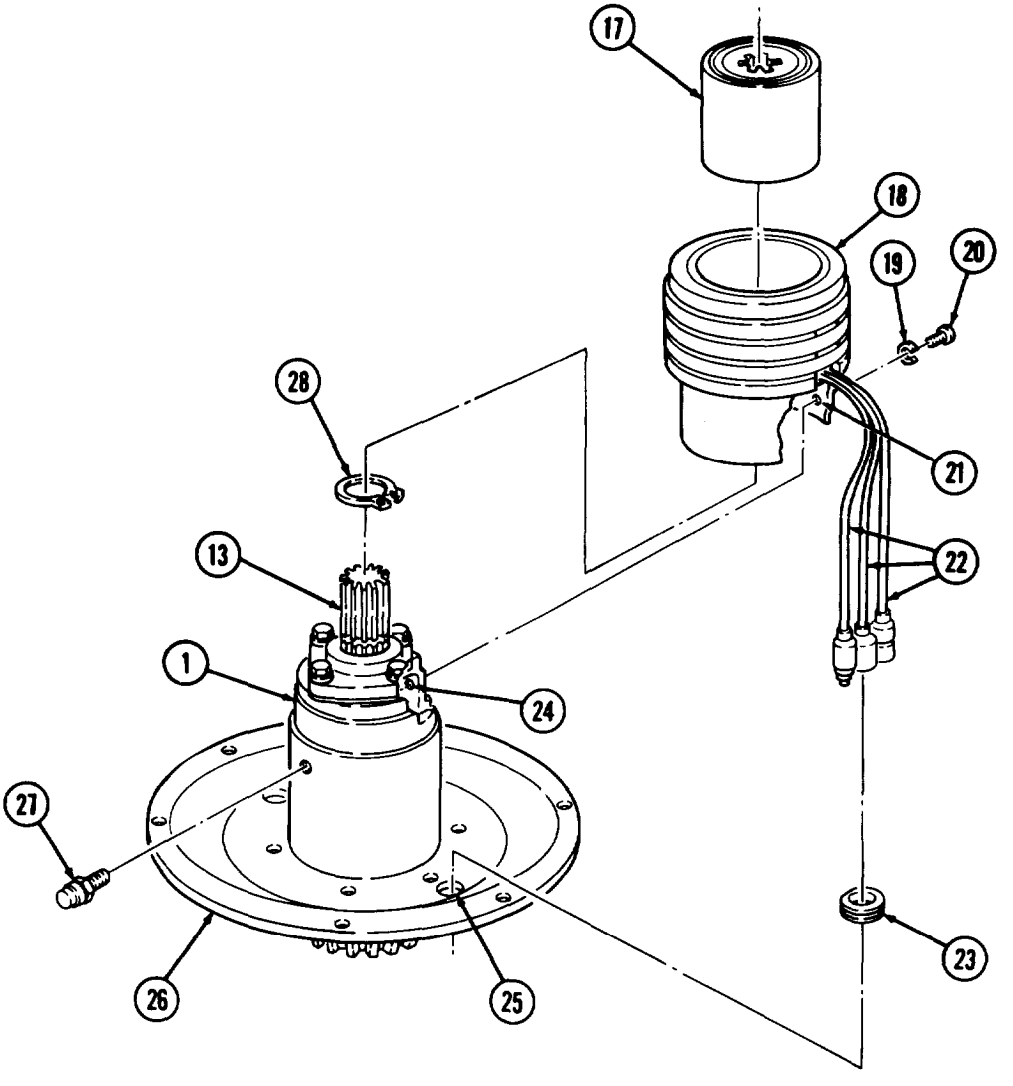

16-25. HOIST BEVEL GEARCASE REPAIR (M816) (Cont'd)

35. Install two plugs (5), three plugs (2), Plug (1), and plug(3) in gearcase housing (4) and input shaft housing (6).

f. Installation

1. Position gearcase housing (4) and input shaft housing (6) on hydraulic jack.

NOTE

Assistant will help with steps 2 through 6.

2. Install housing (11) and gasket (15) on gearcase housing (4) with six new lockwashers (10) and screws (9). Do not tighten screws (9).
3. Aline flange plate (12) with wrecker body (16), and install flange plate (12) with six new lockwashers (7) and screws (8).
4. Connect electrical leads (13) to wiring harness (14). (Electrical lead (17) does not connect to wiring harness (14).)
5. Tighten screws (8) and (9) 25-33 lb-fl (34-45 N•m).
6. Fill gearcase housing (4) and input shaft housing (6) with gear oil (LO 9-2320-260-12).

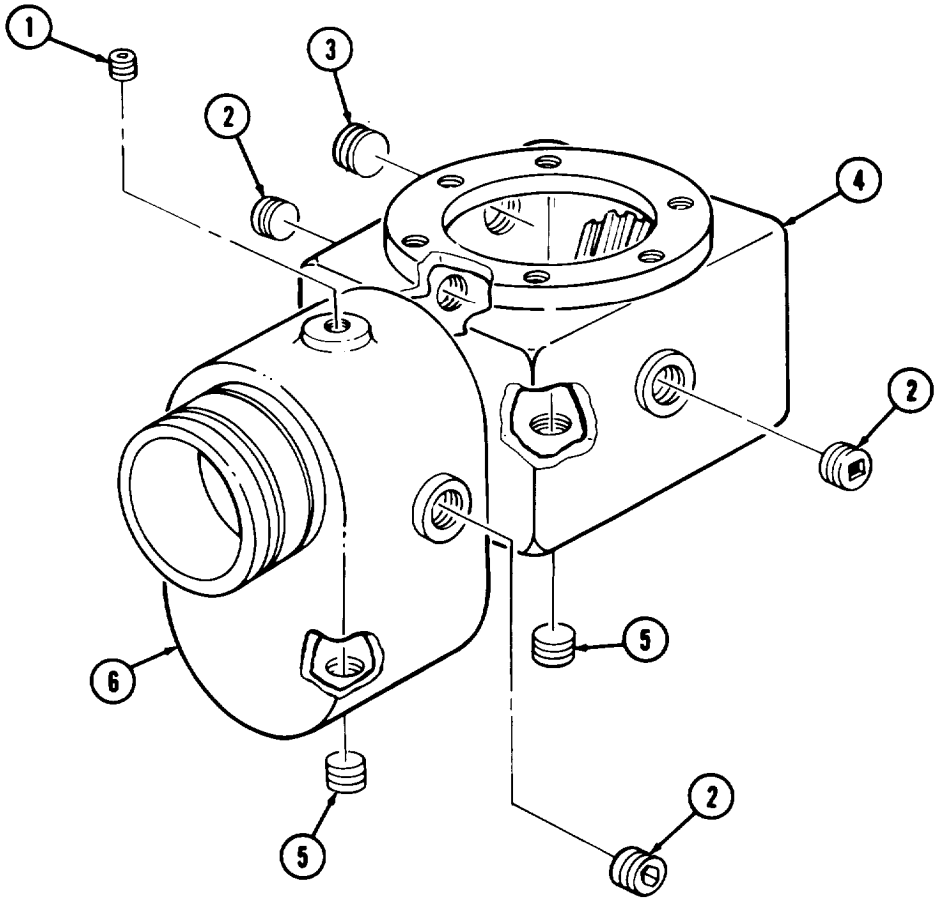

16-25. HOIST BEVEL GEARCASE REPAIR (M816) (Cont'd)

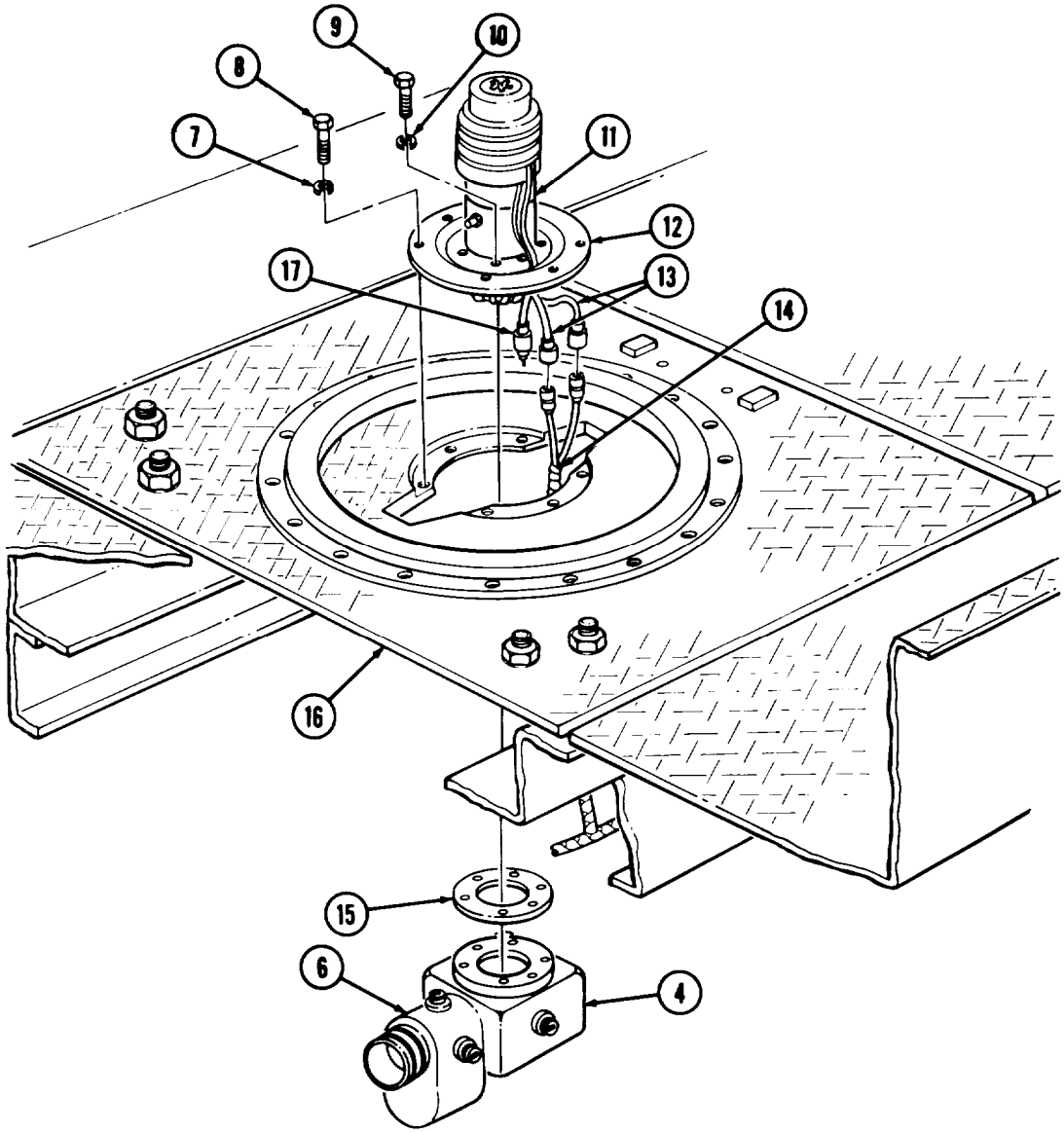

FOLLOW-ON TASKS:
- Install crane gearcase (para. 16-28).
- Install hoist hydraulic pump assembly and support (para. 16-24).
- Install boom assembly (para. 16-18).
- Install boom elevating cylinders (para. 16-14).
- Install crane gondola assembly (para. 16-22).
- Install crane drive propeller shaft (TM 9-2320-260-20).
- Install hydraulic oil reservoir (TM 9-2320-260-20).
- Fill hydraulic oil reservoir (LO 9-2320-260-12).
- Test crane hydraulic system operation (TM 9-2320-260-10).

16-26. CRANE TURNTABLE MAINTENANCE (M816)

THIS TASK **COVERS:**

a. Removal
b. Disassembly
c. Cleaning and Inspection
d. Assembly
e. Installation

INITIAL SETUP

APPLICABLE MODELS

M816

TOOLS

General mechanic's tool kit (Appendix B, Item 1)

Lifting device
Eight washers (Appendix C, Item 56)
Four nuts (Appendix C, Item 24)
Four screws (Appendix C, Item 33)

MATERIALS/PARTS

Two lockwashers (Appendix D. Item 213)
Eighteen locknuts (Appendix D, Item 173)
Eight lockwashers (Appendix D, Item 223)
GAA grease (Appendix C, Item 14)
AntiSeize tape (Appendix C, Item 50)

REFERENCES (TM)

TM 9-237
LO 9-2320-260-12
TM 9-2320-260-20
TM 9-2320-260-34P-2

EQUIPMENT CONDITION

- Floodlight wiring harness removed (TM 9-2320-260-20).
- Hoist bevel gearcase removed (para. 16-25).
- Hydraulic pump and support removed (para. 16-24).
- Crane gearcase removed (para. 16-28).
- Crane boom elevating cylinders removed (para. 16-14).
- Crane gondola assembly removed (para. 16-22).
- Hydraulic oil reservoir removed (TM 9-2320-260-20).
- Boom assembly removed (para. 16-18).

GENERAL SAFETY INSTRUCTIONS

- All personnel must stand clear during lifting operations.
- Ensure lifting capacity is greater than weight of boom support.

a. Removal

NOTE

Assistant will help with step 1.

1. Attach chains and lifting device to boom support (1). Take up slack in chains.
2. Remove eighteen screws (2) and locknuts (3) from boom support (1) and turntable frame (6). Discard locknuts (3).

WARNING

- All personnel must stand clear during lifting operations. A swinging or shifting load may cause injury to personnel.
- Ensure lifting capacity is greater than weight (30 lb (14 kg)) of boom support. Failure to do so may result m injury to personnel or damage to equipment.

NOTE

Assistant will help with step 3.

3. Remove boom support (1) from turntable frame (6).
4. Remove four screws (4) and right-hand guard (5) from turntable frame (6).
5. Remove four screws (7) an left-hand guard (8) from turntable frame (6).
6. Rotate turntable frame (6) 90° clockwise and remove two screws (14), lockwashers (13), and stop block (12) from wrecker body (11). Discard lockwashers (13).
7. Remove socket-head screw (9) from ring•gear (10).
8. Rotate turntable frame (6) and remove next socket head screw (9) from ring gear (10). Repeat until all eighteen socket-head screws (9) are removed.

16-26. CRANE TURNTABLE MAINTENANCE (M816) (Cont'd)

9. Attach chain to turntable frame (6) and lifting device with eight washers (16), four screws (17) and nuts (15). Take up slack in chain.

WARNING

- All personnel must stand clear during lifting operations. A swinging or shifting load may cause injury to personnel.
- Ensure lifting capacity is greater than weight of turntable frame, Failure to do so may result in injury to personnel or damage to equipment.

NOTE

Assistant will help with step 10.

10. Remove turntable frame (6) from wrecker body (11). Set down on supports. Remove chain from rear end of turntable frame (6).

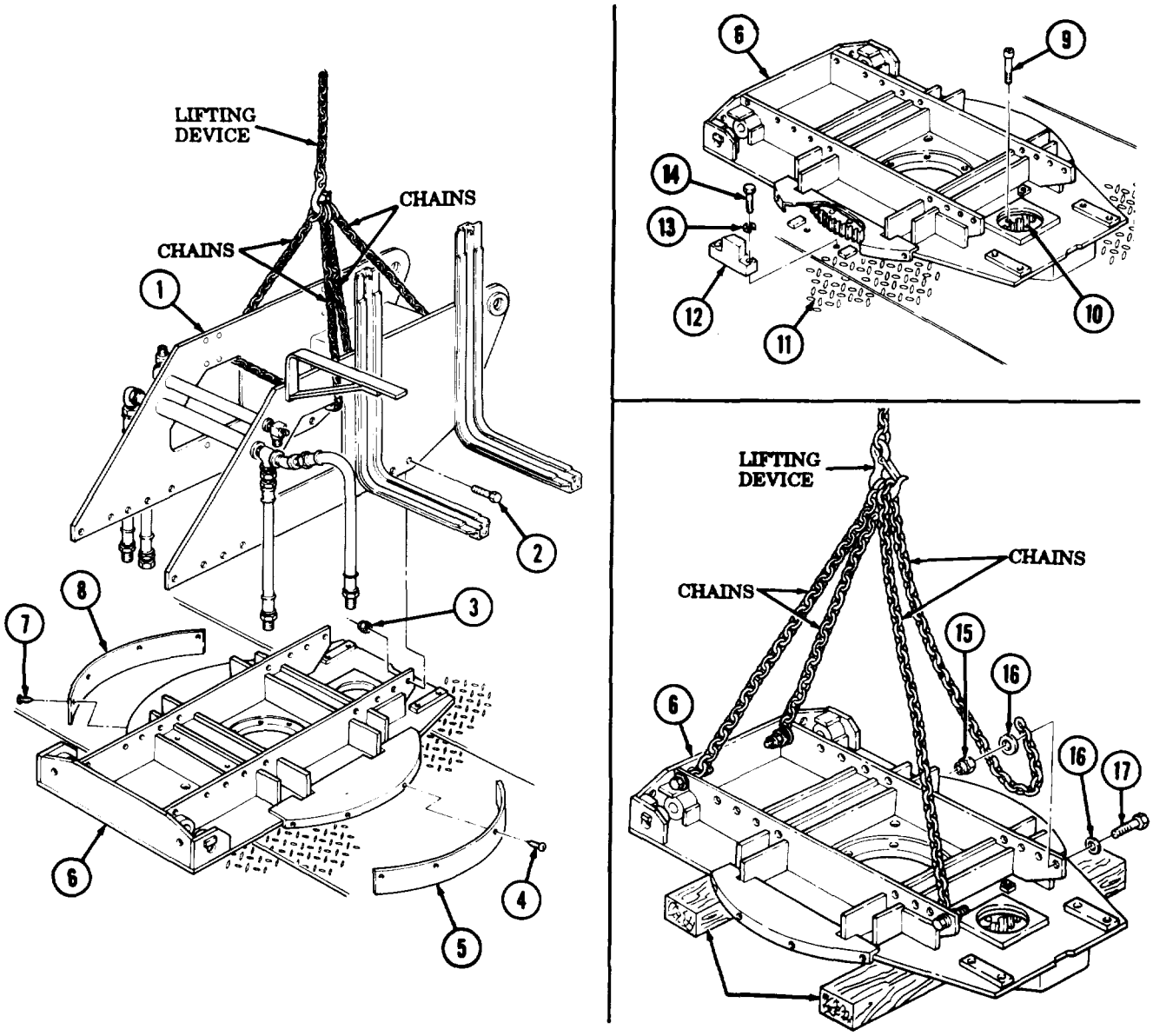

16-26. CRANE TURNTABLE MAINTENANCE (M816) (Cont'd)

b. Disassembly

1. Install chain on front end of turntable (4) with eight washers (2), two screws (3), and nuts (1).
2. Attach chain to lifting device.

NOTE

Assistant will help with steps 3 through 8.

3. Lift turntable (4) and place on supports with gear ring (5) facing up.
4. Remove two nuts (1), screws (3), eight washers (2), and chain from turntable (4) and lifting device.
5. Remove eighteen socket-head screws (6) from ring gear (5) and turntable (4).
6. Attach chain to ring gear (5) with two washers (7), screw (8), and nut (9).

WARNING

- All personnel must stand clear during lifting operations. A swinging or shifting load may cause injury to personnel.
- Ensure lifting capacity is greater than weight of ring gear. Failure to do so may result in injury to personnel or damage to equipment.

7. Attach chain to lifting device and remove ring gear (5) from turntable (4).
8. Place ring gear (5) on supports and ensure it is evenly supported with stepped side down. Shim if necessary.
9. Remove nut (9), screw (8), two washers (7), and chain from ring gear (5) and lifting device.
10. Remove grease fitting (13) from plug (15).
11. Thread screw (14) into plug (15) and pull plug (15) out of ring (12).
12. Remove screw (14) from plug (15).
13. Drive roll pin (10) out of ring (12).
14. Remove fifty-four ball bearings (17) and fifty-four springs (16) through plug hole in ring (12).
15. Separate ring (12) from gear (11).

NOTE

Perform step 16 if supports are present.

16. Remove eight screws (27), lockwashers (26), and two braces (25) from boom support (24). Discard lockwashers (26).

NOTE

Tag hoses and fittings for installation.

17. Remove tee fitting (22) and two elbows (21) and (28) from crosstube (23).
18. Remove two hoses (29) and (37) from elbows (18) and (30).
19. Remove elbows (18) and (30) and adapter (19) from tee fittings (20) and (33).
20. Remove hoses (31) and (35) from adapters (32) and (36).
21. Remove adapters (32) and (36) from tee fittings (20) and (33).
22. Remove tee fittings (20) and (33) from crosstube (34).

16-26. CRANE TURNTABLE MAINTENANCE (M816) (Cont'd)

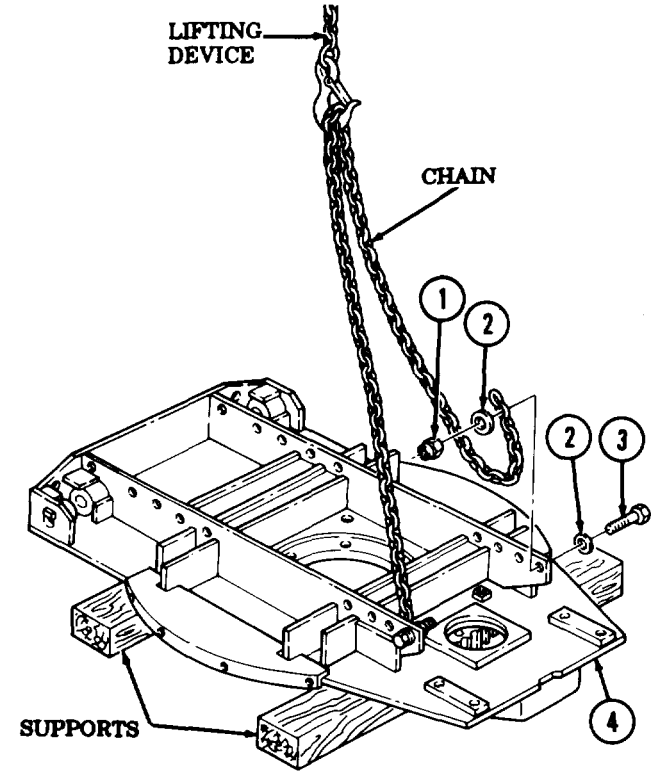

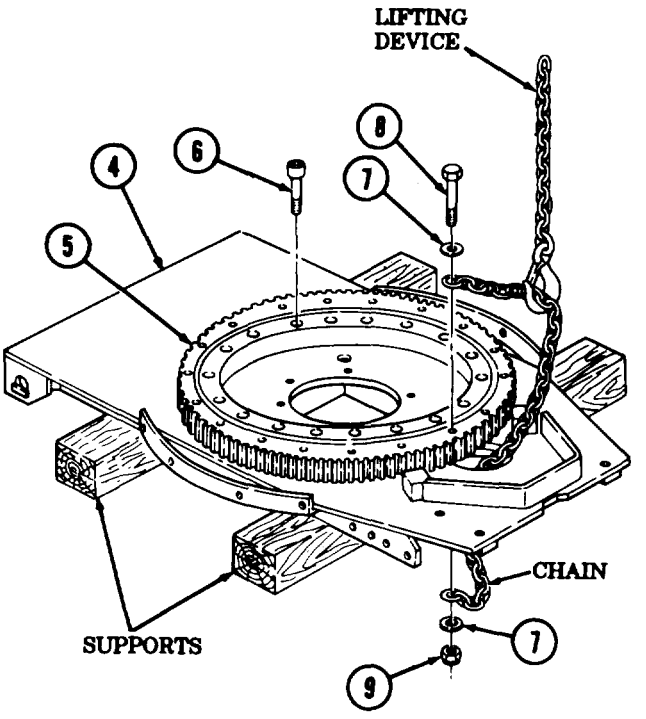

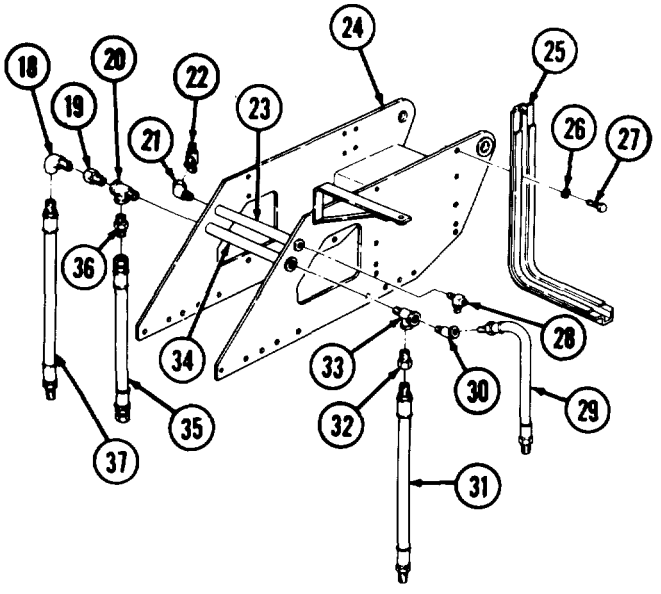

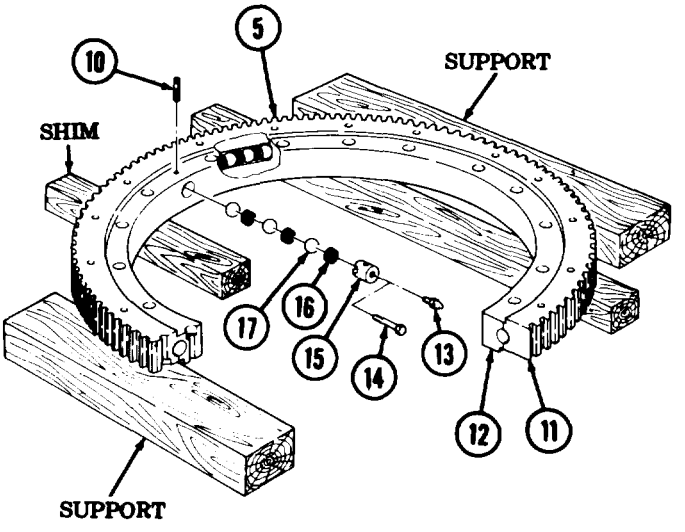

16-26. CRANE TURNTABLE MAINTENANCE (M816) (Cont'd)

c. Cleaning, Inspection, and Repair

1. For general cleaning instruction, refer to para 2-8.
2. For general inspection instructions, refer to para. 2-9.
3. Replace all worn or unrepairable parts.
4. Repair damaged part(s) (para. 2-10).
5. Replace ring (29) and/or gear (27) if part is worn, damaged, or defective.
6. Repair minor cracks and broken welds (TM 9-237).

d. Assembly

1. Wrap all male pipe threads on tee fittings (3) and (15), adapters (14) and (19), hose (13), adapter (2), elbows (1) and (12), hoses (20) and (11), elbows (5) and (10), and tee fitting (4) with antiseize tape.
2. Install tee fittings (3) and (15) on crosstube (17).
3. Install adapters (14) and (19) on tee fittings (3) and (15).
4. Install hoses (13) and (18) on adapters (3) and (15).
5. Install adapter (2) and elbows (1) and (12) on tee fittings (3) and (15).
6. Install hoses (20) and (11) on elbows (1) and (12).
7. Install elbows (5) and (10) on crosstube (6).
8. Install tee fitting (4) on elbow (5).
9. Install two braces (9) on boom support (16) with eight new lockwashers (7) and screws (8).

NOTE

Coat all internal surfaces and parts lightly with GAA grease before installation.

10. Position ring (29) and gear (27) on supports with bearing races (28) alined. Shim if necessary.
11. Install fifty-four springs (25) and bearings (26) in races (28).
12. Install plug (24) and pin (21) in ring gear (22).
13. Install grease fitting (23) in plug (24) and lubricate bearings (26) (LO 9-2320-260-12).
14. Install chain on ring gear (22) with two washers (31), screw (32), and nut (33).

WARNING

- All personnel must stand clear during lifting operations. A swinging or shifting load may cause injury to personnel.
- Ensure lifting capacity is greater than weight of ring gear. Failure to do so may result in injury to personnel or damage to equipment.

NOTE

Assistant will help with step 15.

15. Attach chain to lifting device and position ring gear (22) on turntable frame (34). Ensure ring gear (22) is flush against turntable frame (34).
16. Remove nut (33), screw (32), two washers (31), and chain from ring gear (22).
17. Install ring gear (22) on turntable frame (34) with eighteen socket-head screws (30). Tighten socket-head screws (30) to 170-200 lb-ft (231-271 N*m).

16-25 HOIST BEVEL GEARCASE REPAIR (M 816) (Contd)

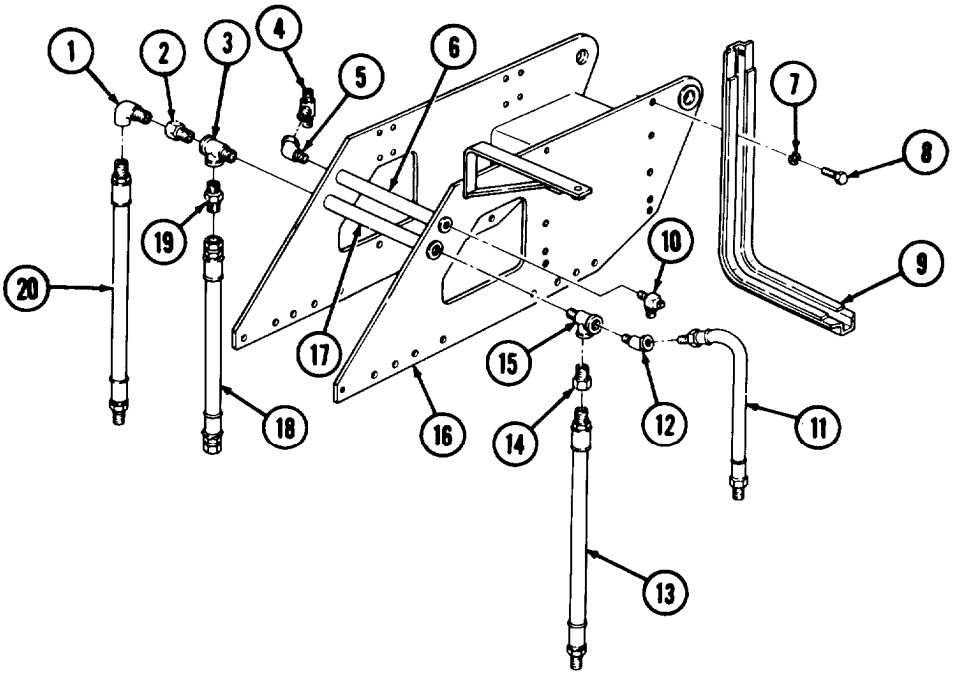

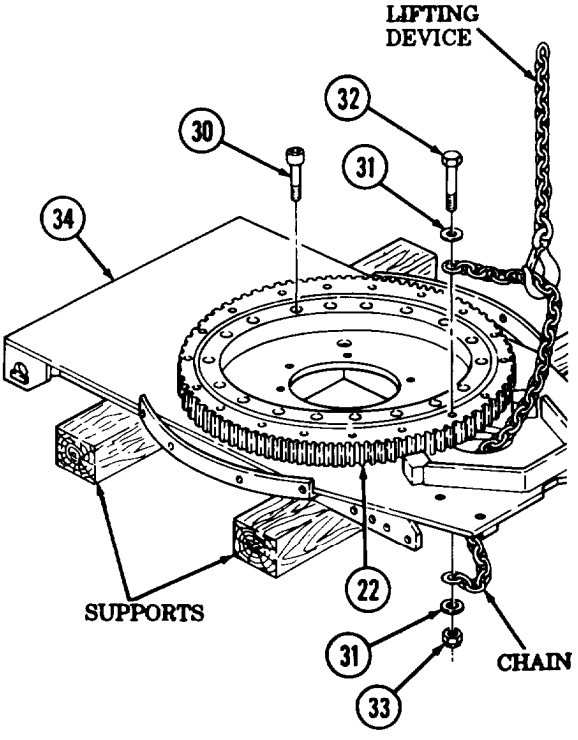

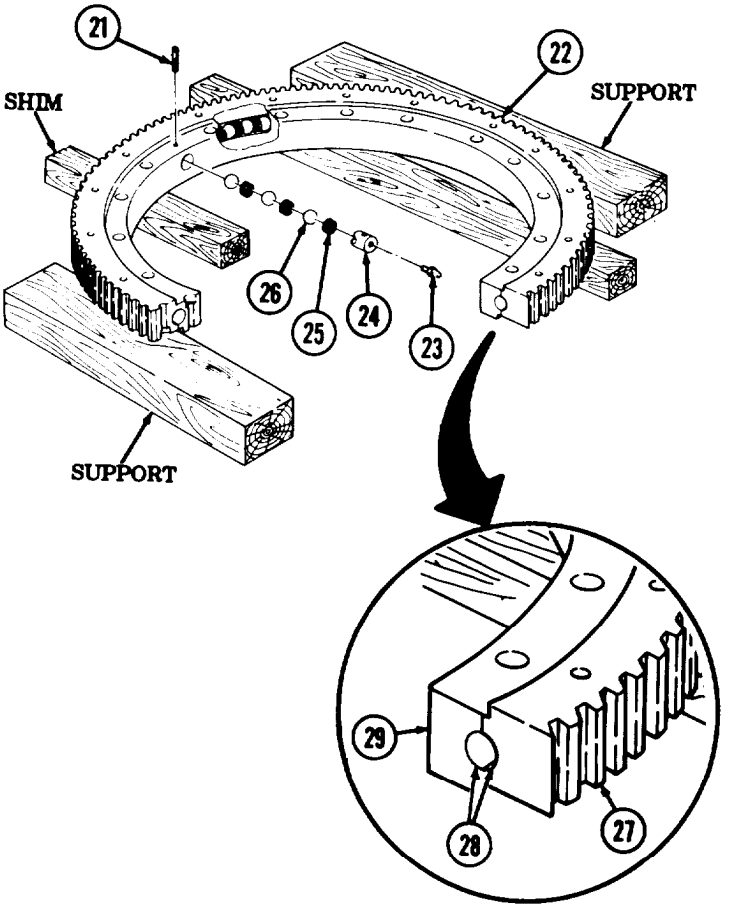

16-26. CRANE TURNTABLE MAINTENANCE (M816) (Cont'd)

e. Installation

1. Install chains on turntable frame (1) with eight washers (3), four screws (4), and nuts (2).
2. Attach chain to lifting device.

WARNING

- All personnel must stand clear during lifting operations. A swinging or shifting load may cause injury to personnel.
- Ensure lifting capacity is greater than weight of turntable frame. Failure to do so may result in injury to personnel or damage to equipment.

NOTE

Assistant will help with steps 3 through 6.

3. Lift turntable frame (1), rotate turntable frame (1), and lower onto supports with ring gear (6) down.
4. Reposition second chain on turntable frame (1) and lifting device.
5. Position turntable frame (1) on wrecker body (7). Ensure holes in ring gear (6) aline with threaded holes in wrecker body (7).
6. Install turntable frame (1) on wrecker body (7) with eighteen socket-head screws (5). Rotate turntable frame (1) as necessary to gain access to screw holes.
7. Install stop block (8) on wrecker body (7) with two new lockwashers (9) and screws (10).
8. Remove four nuts (2), screws (4), eight washers (3), and chain from turntable frame (1) and lifting device.

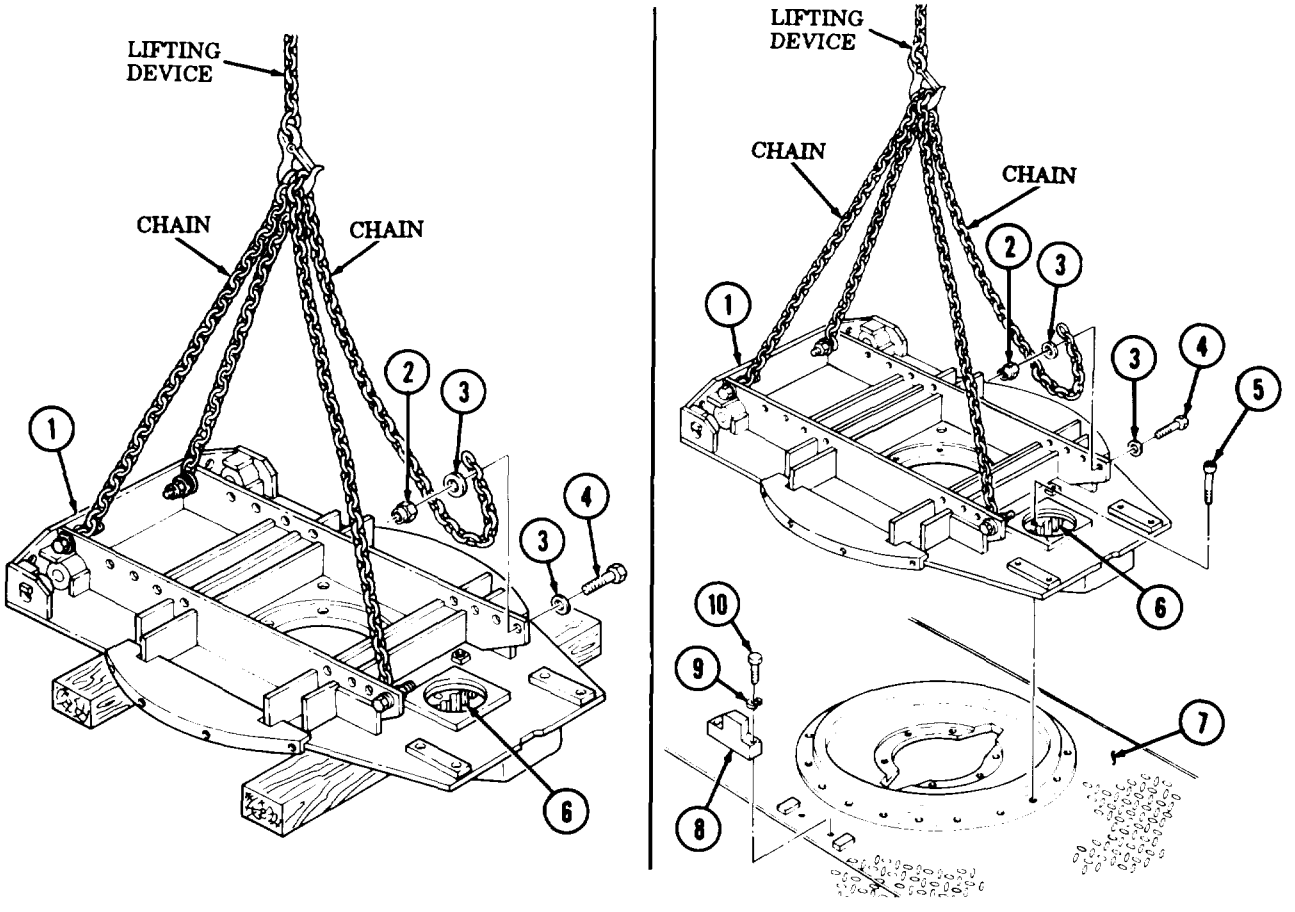

16-26. CRANE TURNTABLE MAINTENANCE (M816) (Cont'd)

9. Install left guard (17) on turntable frame (1) with four screws (16).
10. Install right guard (15) on turntable frame (1) with four screws (14).
11. Attach two chains to boom support (11) and lifting device.

WARNING

- All personnel must stand clear during lifting operations. A swinging or shifting load may cause injury to personnel.
- Ensure lifting capacity is greater than weight (30 lb (14 kg)) of boom support. Failure to do so may result m injury to personnel or damage to equipment.

NOTE

Assistant will help with step 12.

12. Lift boom support (11), aline over turntable frame (l), and install with eighteen screws (12) and new locknuts (13).
13. Remove chain from boom support (11).

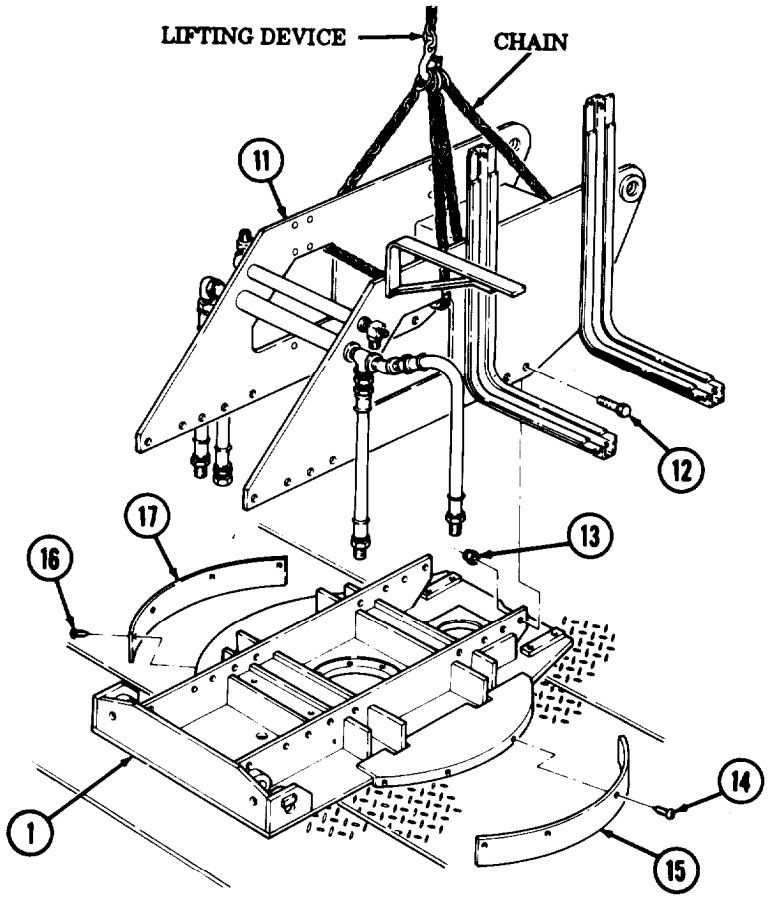

FOLLOW-ON TASKS:
- Install hoist bevel gearcase (para. 16-25).
- Install hydraulic pump and support (para. 16-24).
- Install crane gearcase (para. 16-28).
- Install crane boom elevating cylinders (para 16-14).
- Install floodlight wiring harness (TM 9-2320-260-20).
- Install crane gondola assembly (para. 16-22).
- Install hydraulic oil reservoir (TM 9-2320-260-20).
- Install boom assembly (para. 16-18).
- Start engine, check oil leaks, and check crane operation (TM 9-2320-260-10).

16-27. CONTROL VALVE REPAIR (M816)

THIS TASK COVERS:

a. Disassembly
b. Cleaning, Inspection, and Repair
c. Assembly

INITIAL SETUP

APPULIABI.E MODELS
M816

TOOLS
General mechanic's tool kit (Appendix B, Item 1)

MATERIALS/PARTS
Control valve parts kit (Appendix D, Item 14)

MATERIALS/PARTS (Contd)
Control valve parts kit (Appendix D, Item 15)
Lubricating oil (Appendix C, Item 21)

REFERENCES (TM)
TM 9-2320-260-20
TM 9-2320-260-34P-2

EQUIPMENT CONDITION
Control valve removed (TM 9-2320-260-20).

a. Disassembly

CAUTION

Control valve must be disassembled on a clean and protected work surface. Failure to do so may result in damage to equipment.

NOTE

- Clean control valve housing exterior before start of disassembly (para. 2-8).
- Tag location and position of spools and check valve caps for installation.

1. Remove four spool valve caps (11) from control valve housing (5).
2. Remove C-clip (12), retainer (13), spring (14), washer (15), and retainer (16) from four spools (24) and control valve housing (5).
3. Remove four spools (24) from control valve housing (5).
4. Remove four wipers (25), eight retainers (17), and packings (18) from control valve housing (5). Discard packings (18).
5. Remove seven check valve caps (8), springs (10), and check valves (9) from control valve housing (5).
6. Remove three retainers (6) and packings (7) from seven check valve caps (8). Discard retainers (6) and packings (7).
7. Remove check valve cap (1) and valve (4) from control valve housing (5).
8. Remove three retainers (3) and packings (2) from check valve cap (1). Discard retainers (3) and packings (2).
9. Remove plug (20) and retainer seat (19) from control valve housing (5). Discard plug (20) and retainer seat (19).
10. Remove adjuster body (23), spring (22), and poppet (21) from control valve housing (5). Discard adjuster body (23), spring (22), and poppet (21).

b. Cleaning, Inspection, and Repair

1. For general cleaning instructions, refer to para 2-8.
2. For general inspection instructions,' refer to para. 2-9.
3. Inspect control valve housing (5) for cracks, breaks, and damaged threads. Repair or replace control valve housing (5).

16-27. CONTROL VALVE REPAIR (M816) (Contd)

4. Inspect four spool valve caps (11) for damaged threads or dents. Replace control valve housing (5) if spool valve caps (11) are damaged.
5. Inspect check valve caps (1) and (8) for nicks, burrs, and damage. Replace check valve cap(s) (1) or (8) if damaged.
6. Inspect four spools (24) for nicks, burrs, and scoring. Replace entire control valve housing (5) if spool(s) (24) are damaged.

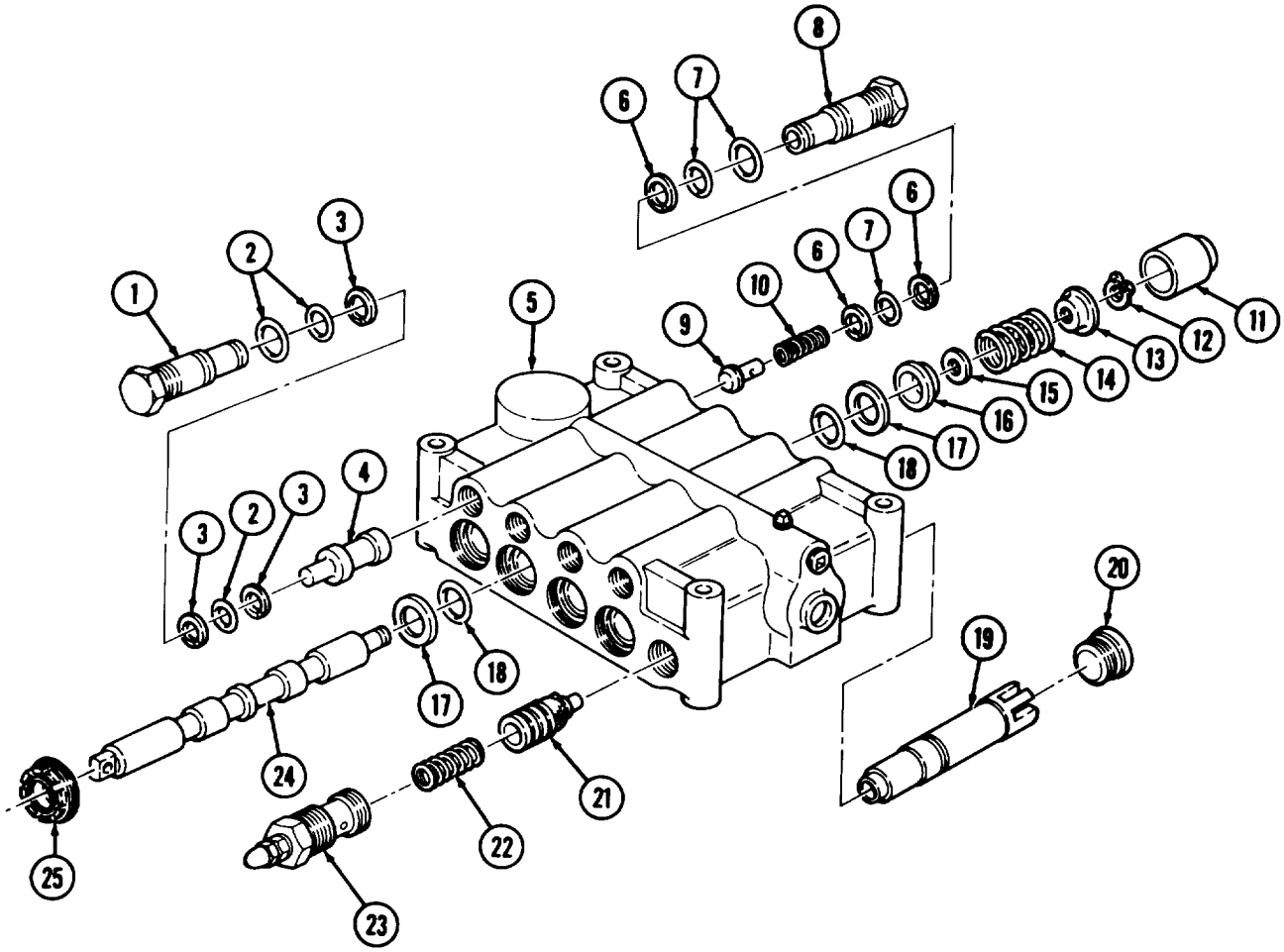

16-27. CONTROL VALVE REPAIR (M816) (Cont'd)

c. Assembly

CAUTION

Control valve must be assembled on a clean and protected work surface. Failure to do so may result in damage to equipment.

NOTE

- All spools and check valve caps must be installed in bore from which it was removed.
- Lubricate all internal parts with hydraulic oil before assembling.

1. Install new poppet (21), spring (22), and adjuster body (23) on control valve housing(5).
2. Install new retainer seat (19) and plug (20) on control valve housing (5).
3. Install three new packings (2) and new retainers (3) on check valve cap (1).
4. Install valve (4) and check valve cap (1) on control valve housing (5).
5. Install three new packings (7) and new retainers (6) on seven check valve caps (8).
6. Install seven check valves (9), springs (10), and check valve caps (8) on control valve housing(5).
7. Install eight new packings (18) and retainers (17) on control valve housing (5).
8. Install four wipers (25) on control valve housing (5).
9. Install four spools (24) in control valve housing (5) in positions previously noted.
10. Install retainer (16), washer (15), spring (14), and retainer (13) on four spools (24) and control valve housing (5) with C-clip (12).
11. Install four spool valve caps (11) on control valve housing (5).

16-27. CONTROL VALVE REPAIR (M816) (Cont'd)

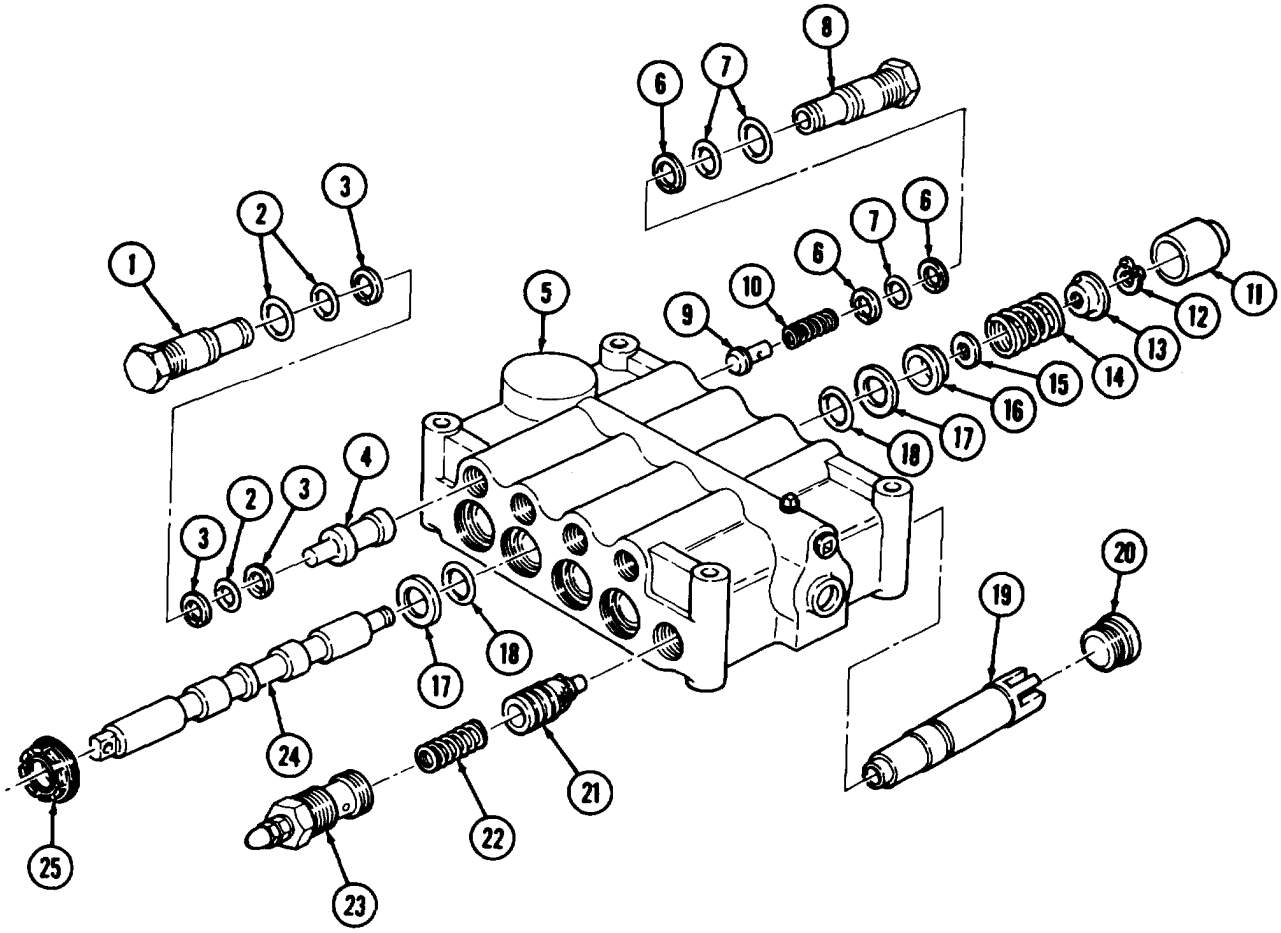

FOLLOW-ON TASK: Install control valve (TM 9-2320-260-20).

16-28. CRANE GEARCASE MAINTENANCE (M816)

THIS TASK COVERS:

a. Removal
b. Disassembly
c. Cleaning and Inspection
d. Assembly
e. Installation

INITIAL SETUP

APPLICABLE MODELS
M816

TOOLS
General mechanic's tool kit (Appendix B, Item 1)
Mechanical puller kit (Appendix B, Item 14)
Outside micrometer (Appendix B, Item 8)
Inside micrometer (Appendix B, Item 9)
Arbor press (Appendix B, Item 7)

MATERIALS/PARTS
Twenty lockwashers (Appendix D, Item 223)
Two woodruff keys (Appendix D, Item 566)
Two woodruff keys (Appendix D, Item 567)

MATERIALS/PARTS (Cont'd)
Woodruff key (Appendix D, Item 562)
Two gaskets (Appendix D, Item 112)
Gasket (Appendix D, Item 114)
Seal (Appendix D, Item 468)

REFERENCES (TN)
LO 9-2320-260-12
TM 9-2320-260-10
TM 9-2320-260-34P-2

EQUIPMENT CONDITION
Hoist winch motor removed (para. 16-15).

a. Removal

1. Remove four screws (8) and lockwashers (7) from end cap (1) and motor mounting cap (6). Discard lockwashers (7).
2. Remove two screws (3) and lockwashers (4) from gearcase housing (2). Discard lockwasher (4).

NOTE

Assistant will help with step 3.

3. Pry gearcase housing (2) from turntable (5) and remove gearcase housing (2).

b. Disassembly

NOTE

Have drainage container ready to catch oil.

1. Remove magnetic plug (15) and two plugs (14) from gearcase housing (2). Drain gearcase housing (2).
2. Remove six screws (12) and lockwashers (13) from cover (17). Discard lockwashers (13).
3. Install three screws (11) in three jacking holes (10) in cover (17). Evenly tighten screws (11) and remove cover (17) and gasket (16) from gearcase housing (2). Discard gasket (16).
4. Remove three screws (11) and plug (9) from cover (17).
5. Remove screw (18), lockwasher (19), and washer (20) from spur gear shaft (21). Discard lockwasher (19).

NOTE

Assistant will help with step 6.

6. Using an arbor press, press spur gear shaft (21) from gearcase housing (2).

16-28. CRANE GEARCASE MAINTENANCE (M816) (Cont'd)

7. Using a mechanical puller, remove bearing (24) from spur gear shaft (21).
8. Press worm gear (22) and washer (23) from spur gear shaft (21).
9. Remove two woodruff keys (28) from spur gear shaft (21). Discard woodruff keys (28).
10. Using a mechanical puller, remove bearing (26) and washer (25) from spur gear shaft (21).
11. Remove seal (27) from spur gear shaft (21). Discard seal (27).

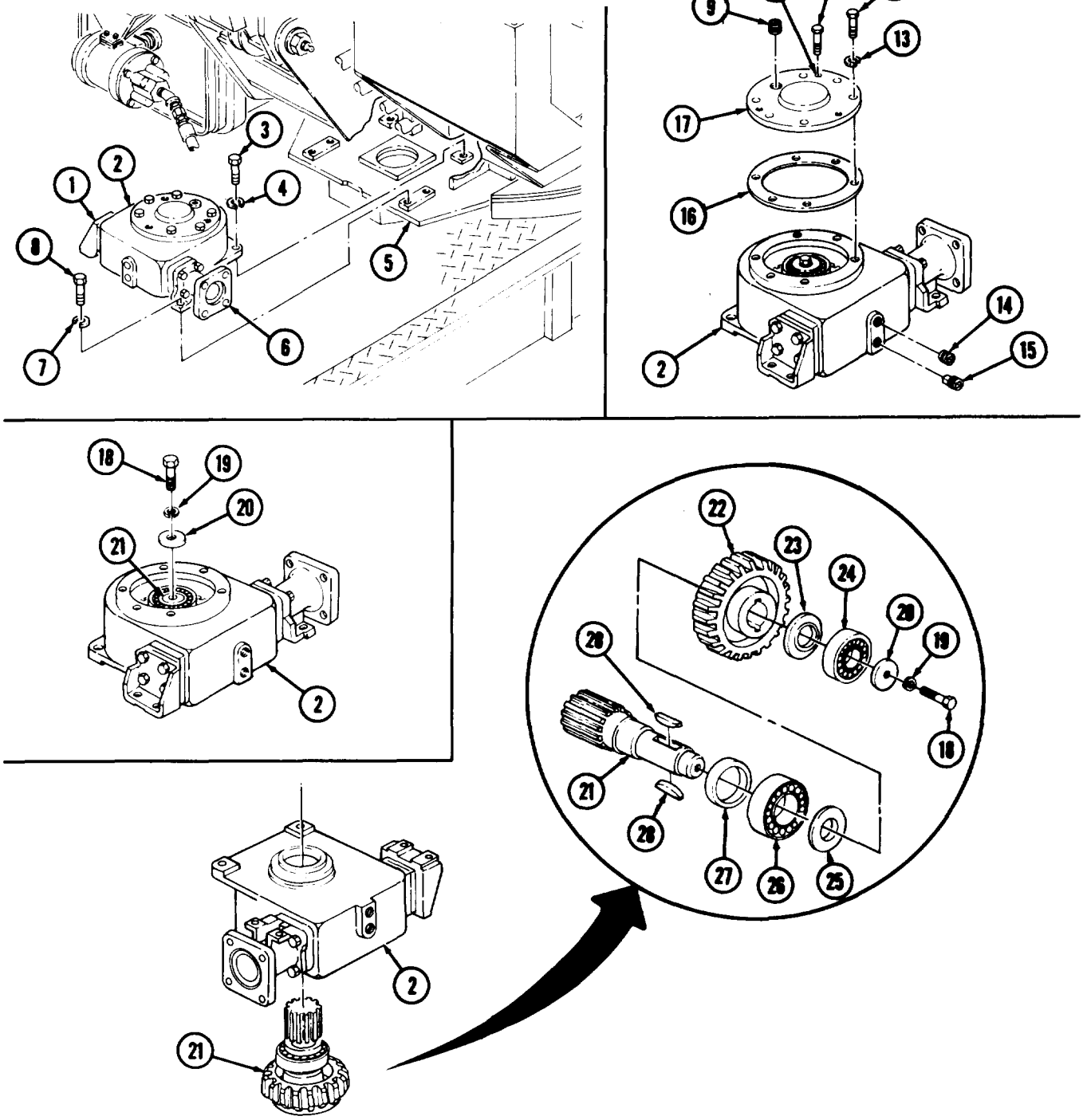

16-28. CRANE GEARCASE MAINTENANCE (M816) (Cont'd)

12. Remove four screws (14) and lockwashers (13), motor mounting cap (l), and gasket (2) from gearcase housing (8). Discard lockwashers (13) and gasket (2).
13. Remove coupling (3) from wormshaft (4).
14. Remove woodruff key (5) from wormshafi (4). Discard woodruff key (5).
15. Remove four screws (9), lockwashers (10), end cap (11), and gasket (12) from gearcase housing (8). Discard lockwashers (10) and gasket (12).
16. Using arbor press, partially remove wormshaft (4) so that front bearing(6) is unseated from gearcase housing (8).

CAUTION

Ensure rear bearing on shaft and front bore in gearcase housing are alined before pressing rear bearing through front bore. Failure to do so may result in damage to bearing or gearcase.

17. Aline rear bearing (7) and front, bearing bore in gearcase housing (8) and press wormshaft (4) from gearcase housing (8).
18. Using mechanical puller, remove bushing (21) and front bearing (6) from wormshaft (4).
19. Press bushing (21) from front bearing (6).
20. Remove woodruff key (26) from wormshaft (4). Discard woodruff key (26).
21. Remove spring (22), spacer (23), and washer (24) from wormshaft (4).
22. Using mechanical puller, remove rear bearing (7) and bushing (31) from wormshaft (4).
23. Press bushing (31) from rear bearing (7).
24. Press woodruff key (27) from wormshaft (4). Discard woodruff key (27).
25. Remove spring (30), spacer (29), washer (28), and worm gear (25) from wormshaft (4).

c. Cleaning and Inspection

1. For general cleaning instructions, refer to para 2-8.
2. For general inspection instructions, refer to para. 2-9.
3. Inspect front wormshaft bearing (6), rear wormshaft bearing (7), spur gear bearing (20), spur gear shaft (16), wormshaft (4), gearcase housing (8), cover (15), thrust washers (18) and (19), and bushings (21) and (31) for damage and wear. Refer to table 16-15, Crane GearCase Wear Limits, for measurements. Replace parts if worn or damaged.

Table 16-15. Crane Gearcase Wear Limits.

ITEM NO.	ITEM/POINT OF MEASUREMENT	WEAR LIMITS/TOLERANCES	
		INCHES	MILLIMETERS
4	Wormshaft – outer diameter – minimum (2 places)	1.720	43.69
6,7	Wormshaft bearings		
	Outer diameter	3.9364	99.98
	Inner diameter	1.7717	45.00
8	Gearcase housing		
	Gearcase bore - maximum (2)	3.9379	100.25
	Gearcase bore - maximum	4.3315	110.02
15	Cover bearing bore - outer diameter - minimum		

16-28. CRANE GEARCASE MAINTENANCE (M816) (Cont'd)

Table 16-15. Crane Gearcase Wear Limits (Cont'd).

ITEM NO.	ITEM/POINT OF MEASUREMENT	WEAR LIMITS/TOLERANCES	
		INCHES	MILLIMETERS
16	Spur gear shaft		
	Outer diameter (a) - minimum	1.7718	45.00
	Outer diameter (b) - minimum	1.895	48.13
	Outer diameter (c) - minimum	2.3623	60.002
	Outer diameter (d) - minimum	2.624	66.65
17	Spur gear bearing		
	Outer diameter	4.3301	109.985
	Inner diameter	2.3016	
18	Thrust washer - thickness - minimum	0.489	12.42
	Thrust washer - thickness - minimum	0.185	4.70
:19	Spur gear bearing		
	Outer diameter	3.9364	99.985
	Inner diameter	1.7717	45.001
21,31	Bushing - outer diameter - minimum	1.7718	45.00

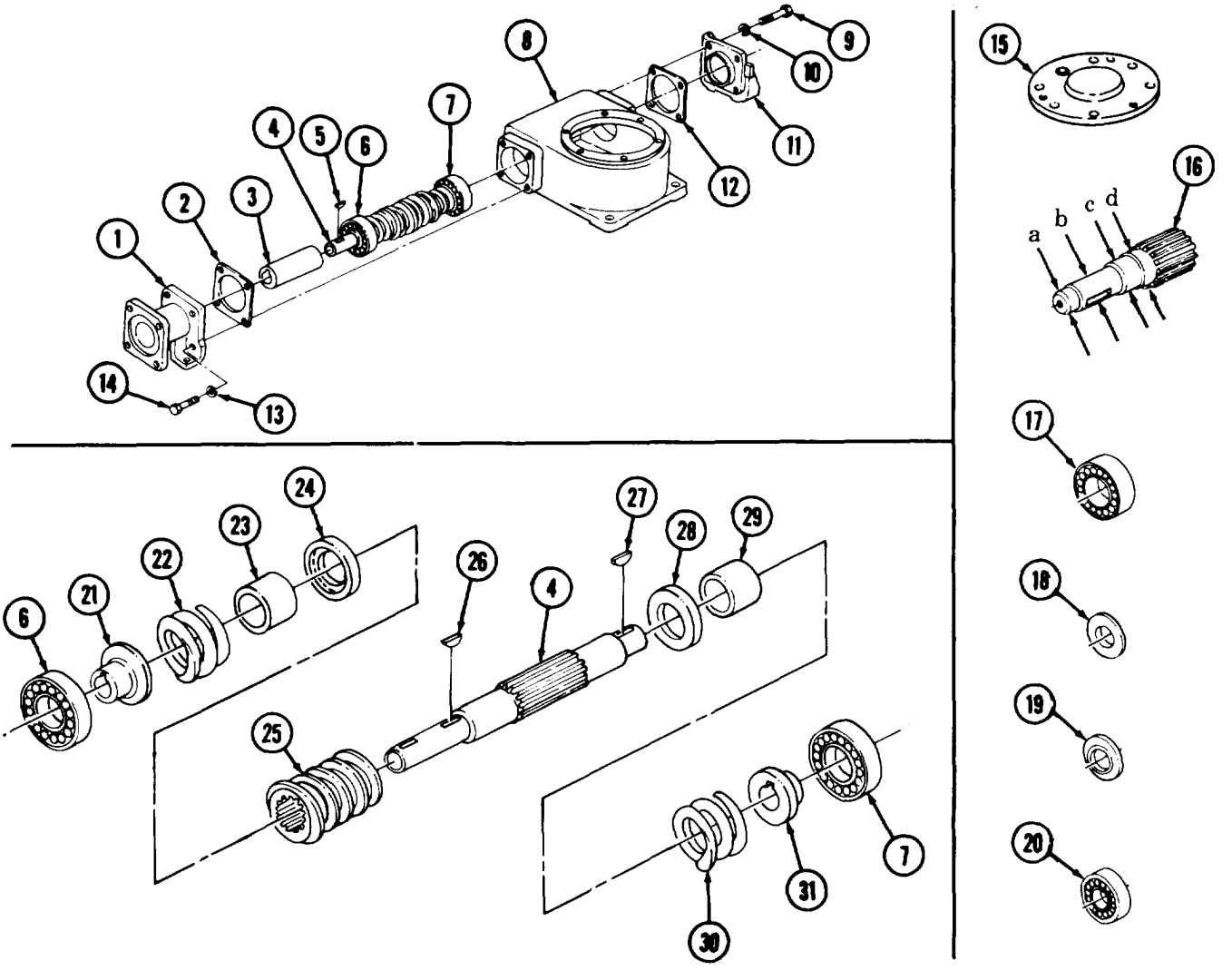

16-28. CRANE GEARCASE MAINTENANCE (M816) (Cont'd)

d. Assembly

NOTE

Coat all internal parts with gear oil before assembly.

1. Install washer (7), spacer (8), and spring (9) on shaft (12).
2. Install new woodruff key (6) on shaft (12).
3. Press bushing (10) into bearing (11).
4. Install bushing (10) and bearing (11) on shaft (12).
5. Slide worm gear (14) over splines of shaft (12).
6. Install washer (5), spacer (4), and spring (3) on shaft (12).
7. Install new woodruff key (13) in shaft (12).
8. Install bushing (2) into bearing(1).
9. Install bushing (2) and bearing (1) on shaft (12).
10. Install worrnshaft (19) in gearcase housing (20).
11. Install new gasket (21) and end cap (24) on gearcase housing (20) with four new lockwashers (23) and screws (22). Tighten screws (22) 44-61 lb-ft (60-83 N-m).
12. Install new woodruff key (18) in wormsha.ft (19).
13. Install coupling (17) on wormshaft (19).
14. Install new gasket (16) and motor mount (15) on gearcase housing (20) with four new lockwashers (25) and screws (26). Tighten screws (26) 44-61 lb-ft (60-83 N•m).

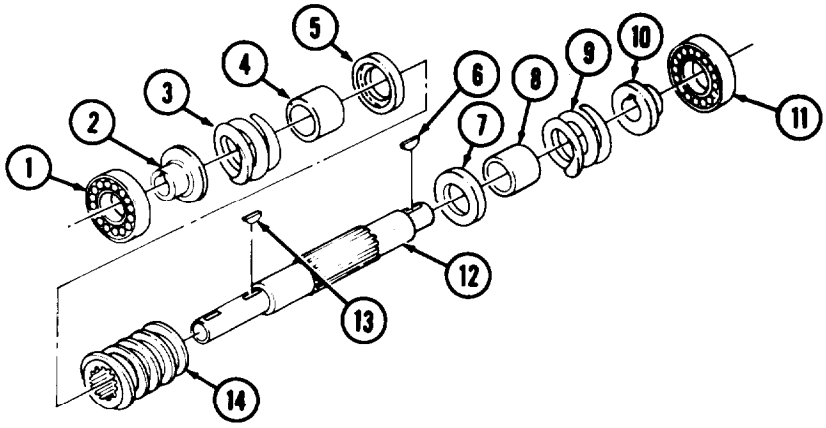

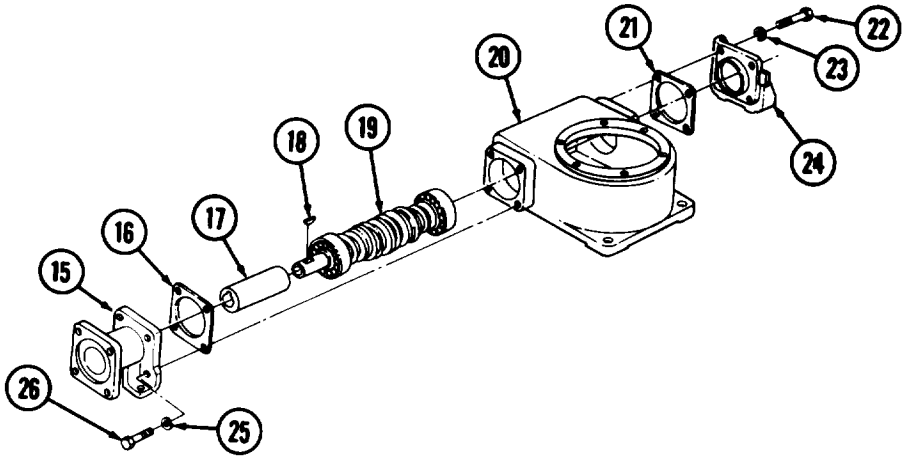

16-28. CRANE GEARCASE MAINTENANCE (M816) (Cont'd)

15. Install new seal (33) on spur gear shaft (27).
16. Using arbor press, install bearing (32) on spur gear shaft **(27).**
17. Install washer (31) on spur gear shaft (27).
18. Install two woodruff keys (34) on spur gear shaft (27).
19. Using arbor press, install worm gear (28) on spur gear shaft (27).
20. Install washer (29) on spur gear shaft (27).
21. Using arbor press, install bearing (30) on spur gear shaft (27) and seat against worm gear (28).
22. Using arbor press, install spur gear shaft (27) in gearcase housing (20).
23. Install washer (37), new lockwasher (36), and screw (35) on spur gear shaft (27).
24. Install new gasket (43) and cover (44) on gearcase housing (20) with six new lockwashers (40) and screws (39).
25. Install plug (38) on cover (44).
26. Install two plugs (41) and magnetic plug (42) on gearcase housing (20).

e. Installation

NOTE

Assistant will help with installation of gearcase housing.

Position gearcase housing (20) on turntable (47) and instill with two new lockwashers (46), screws (45), four new lockwashers (48). and screws (49). Tighten screws (45) 44-61 lb-ft (60-83 N•m). Tighten screws (49) 90-98 lb-ft (122-133 N•m).

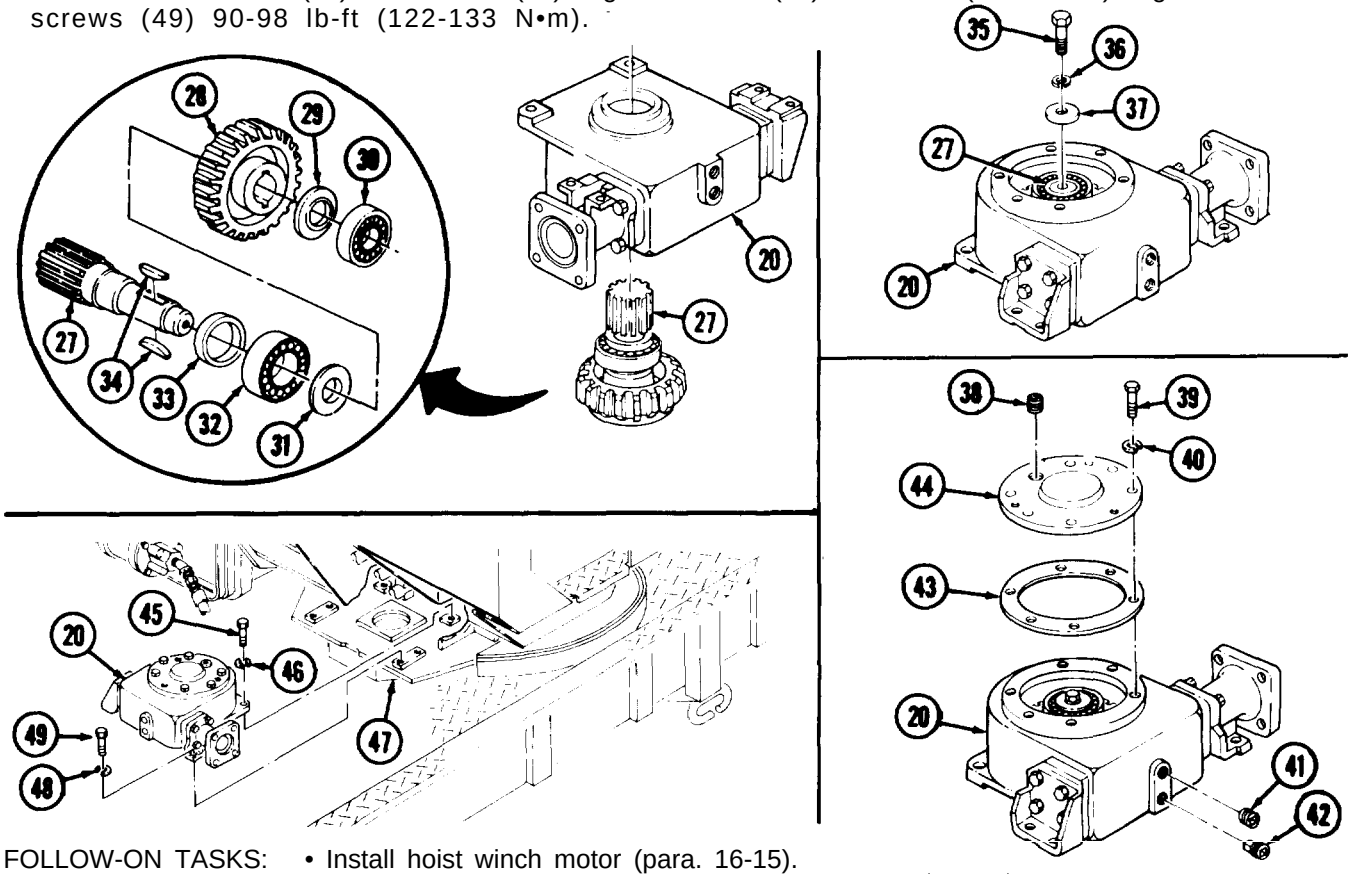

FOLLOW-ON TASKS:
- Install hoist winch motor (para. 16-15).
- Fill drive gearcase assembly with oil (LO 9-2320-260-12).
- Test wrecker operation (TM 9-2320-260-10).

16-29 CRANE CAB (GONDOLA) REPLACEMENT (M 819)

THIS TASK COVERS:

a. Removal **b. Installation**

INITIAL SETUP

APPLICABLE MODELS

M819

TOOLS

General mechanic's tool kit (Appendix B, Item 1)
1-5116-in. open-end wrench (Appendix B, Item 122)
1-7/16-in. open-end wrench (Appendix B, Item 124)
1-lJ2-in. open-end wrench (Appendix B, Item 125)
Lifting device
Chains

MATERIALS/PARTS

Four lockwashers (Appendix D, Item 247)
Four lockwashers (Appendix D, Item 220)
Two lockwashers (Appendix D, Item 221)

PERSONNEL REQUIRED

Two

REFERENCES (TM)

TM 9-2320-260-10
TM 9-2320-260-20
TM 9-2320-260-34P-2

EQUIPMENT CONDITION

- Parking brake set (TM 9-2320-260-10).
- Cab door sliding windows removed (TM 9-2320-260-20).
- Cab side window removed (TM 9-2320-260-20).
- Cab stationary window removed (TM 9-2320-260-20).
- Control valve bank removed (para. 16-36).
- Hydraulic lines and hoses (in cab) disconnected (para. 15-10).
- Spare tire removed (TM 9-2320-260-10).
- Operator's seat cushion removed (TM 9-2320-260-20).
- Cab door and steps removed (TM 9-2320-260-20).
- Floodlights removed (TM 9-2320-260-20).
- Floodlight electrical harness removed (TM 9-2320-260-20).
- Fire extinguisher and bracket removed (TM 9-2320-260-20).

GENERAL SAFETY INSTRUCTIONS

- All personnel must stand clear during lifting operations.
- Ensure lifting capacity is greater than the weight of the cab.

WARNING

- All personnel must stand clear during lifting operations. A swinging or shifting load may cause injury or death to personnel.
- Ensure lifting capacity is greater than weight (500 lb (227 kg)) of cab. Failure to do so may result in injury to personnel or damage

a. Removal

1. Attach chains to cab (1) and lifting device. Remove slack from chain.
2. Remove four nuts (5), lockwashers (4), and screws (3) from cab (1) and boom (2). Discard lockwashers (4).
3. Remove four screws (9) and lockwashers (8), and bracket (10) from cab (1) and boom (2). Discard lockwashers (8).
4. Remove two screws (7) and lockwashers (6), and cab (1) from boom (2). Place cab (1) on wooden supports. Discard lockwashers (6).
5. Remove chain from cab (1) and lifting device.

b. Installation

1. Attach chain to cab (1) and lifting device.

16-29 CRANE CAB (GONDOLA REPLACEMENT (M819) (Contd)

WARNING

- All personnel must stand clear during lifting operations, A swinging or shifting load may cause injury or death to personnel.
- Ensure lifting capacity is greater than weight (500 lb (227 kg)) of cab. Failure to do so may result in injury to personnel or damage to equipment.

2. Lift cab (1) from wooden supports and position cab (1) next to boom (2).
3. Aline holes in cab (1) with holes in boom (2).
4. Install two new lockwashers (6) and screws (7) on cab (1) and boom (2).
5. Install bracket (10) and four new lockwashers (8) and *screws* (9) on cab (1) and boom (2).
6. Install four screws (3) on cab (1) and boom (2) with four new lockwashers (4) and nuts (5).

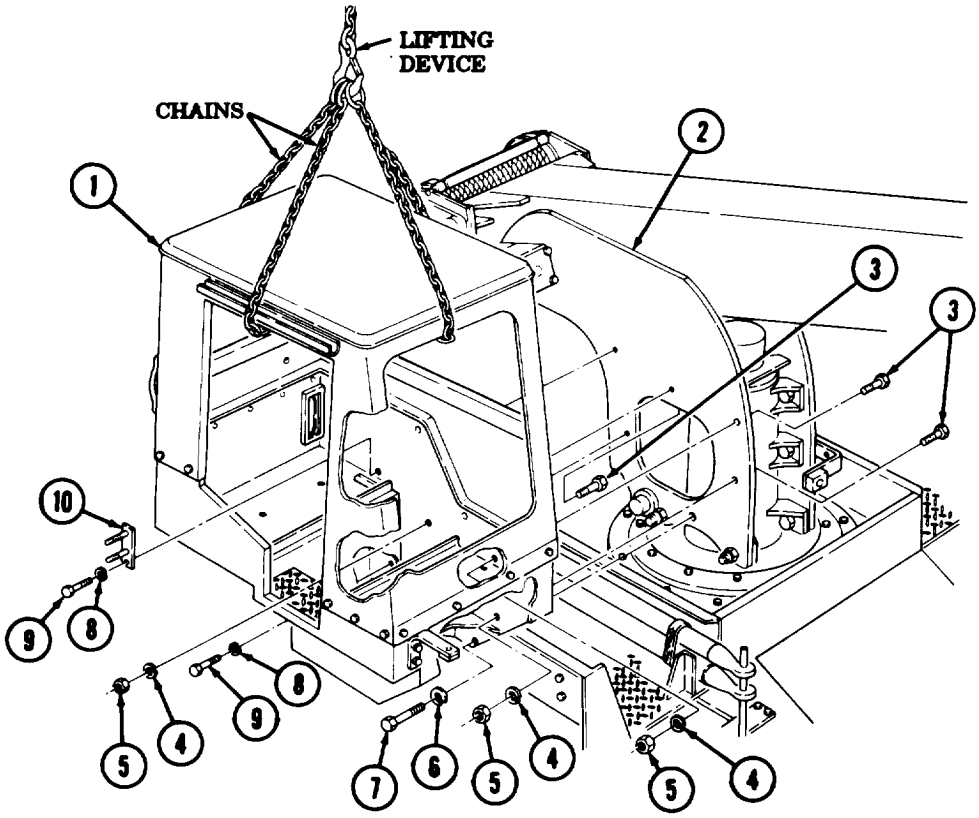

FOLLOW-ON TASKS:
- Install cab door and steps (TM 9-2320-260-20).
- Ihstall operator's seat cushion (TM 9-2320-260-20).
- Install spare tire (TM 9-2320-260-10).
- Connect hydraulic lines and hoses (in cab) (para. 15-10).
- Install control valve bank (para. 16-36).
- Install cab stationary window (TM 9-2320-260-20).
- Install cab side window (TM 9-2320-260-20).
- Install cab door sliding window (TM 9-2320-260-20).
- Install fire extinguisher and bracket (TM 9-2320-260-20).
- Install floodlight electrical harness (TM 9-2320-260-20).
- Install floodlights (TM 9-2320-260-20).

16-30. BOOM SWING MECHANISM REPLACEMENT (M819)

THIS TASK COVERS:

a. Removal **b. Installation**

INITIAL SETUP

APPLICABLE MODELS

M819

TOOLS

General mechanic's tool kit (Appendix B, Item 1)
1-1/8 in. open-end wrench (Appendix B, Item 121)
1-11/16 in. open-end wrench (Appendix B, Item 127)
Lifting device
Chains

MATERIALS/PARTS

Gasket (Appendix D, Item 59)
Six lockwashers (Appendix D, Item 215)
Woodruff key (Appendix D, Item 546)
Cap and plug set (Appendix C, Item 6)
Antiseize tape (Appendix C, Item 50)

REFERENCES (TM)

LO 9-2320-260-12
TM 9-2320-260-10
TM 9-2320-260-34P-2

EQUIPMENT CONDITION

- Parking brake set (TM 9-2320-260-10).
- Drain gear oil from boom swing mechanism (LO 9-2320-260-12).

GENERAL SAFETY INSTRUCTIONS

- All personnel must stand clear during lifting operations.
- Ensure lifting capacity is greater than weight of swing mechanism.

a. Removal

- Clean area around hoses and lines before removal to prevent entry of dirt. Damage will occur if dirt or dust enters system.
- Cap or plug all openings immediately after disconnecting lines and hoses to prevent contamination. Remove caps or plugs before installation. Failure to do so may result in hydraulic system damage.

NOTE

- Have drainage container ready to catch oil.
- Tag hoses for installation.
- Mark positions of h hydraulic motor fittings for installation.

1. Loosen swivel nuts (5) and (7) and disconnect hoses (10) and (12) from adapter elbows (4) and (6).
2. Loosen swivel nut (9) on angle adapter (8) and disconnect drain hose (11) from angle adapter (8).
3. Remove six screws (15) and lockwashers (14) from flange of boom swing mechanism (13). Discard lockwashers (14).
4. Remove hydraulic motor (3) and coupling (1) from boom swing mechanism (13).
5. Remove coupling (1) and woodruff key (2) from shaft of hydraulic motor (3) and boom swing mechanism (13). Discard woodruff key (2).
6. Remove three nuts (18) from studs (17) on housing (16).
7. Attach chains to boom swing mechanism (13) and lifting device.

WARNING

- All personnel must stand clear during lifting operations, A swinging or shifting load may cause injury to personnel,
- Ensure lifting capacity is greater than weight of boom swing mechanism. Failure to do so may result in injury to personnel or damage to equipment.

16-30. BOOM SWING MECHANISM REPLACEMENT (M819) (Cont'd)

8. Remove boom swing mechanism (13) and gasket (20) from base plate flange (19). Discard gasket (20).
9. Remove chains from lifting device and boom swing mechanism (13).

b. Installation

1. **Attach chains to boom swing mechanism (13) and lifting device.**
2. **Position new gasket (20) on base plate flange (19).**

WARNING

- **All personnel must stand clear during lifting operations. A swinging or shifting load may cause injury to personnel.**
- **Ensure lifting capacity is greater than weight of boom swing mechanism. Failure to do so may result in injury to personnel or damage to equipment.**

3. **Lift boom swing mechanism (13) and guide into position so that studs (17) in housing (16) aline with holes in base plate flange (19). Lower boom swing mechanism (13) in place.**
4. **Install three nuts (18) on studs (17).**
5. **Remove chains from boom swing mechanism (13) and lifting device.**
6. **Place new woodruff key (2) and coupling (1) on shaft of hydraulic motor (3).**
7. **Aline coupling (1) with new woodruff key (2) on shaft of boom swing mechanism (13) and install hydraulic motor (3) on boom swing mechanism (13) with six new lockwashers (14) and screws (15).**
8. **Wrap male threads of hoses (10), (11), and (12) with antiseize tape.**
9. **Connect drain hose (11) to angle adapter (8) with swivel nut (9).**
10. **Connect hoses (12) and (10) to adapter elbows (4) and (6) with swivel nuts (5) and (7).**

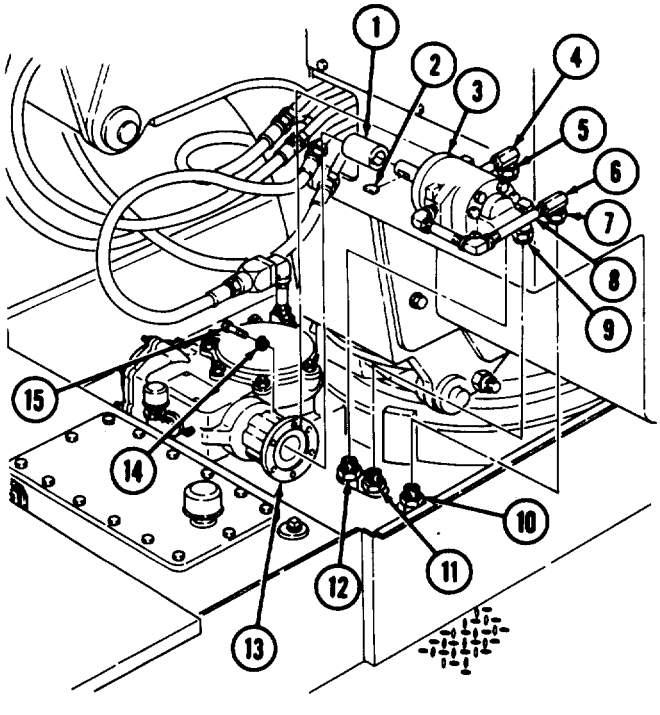

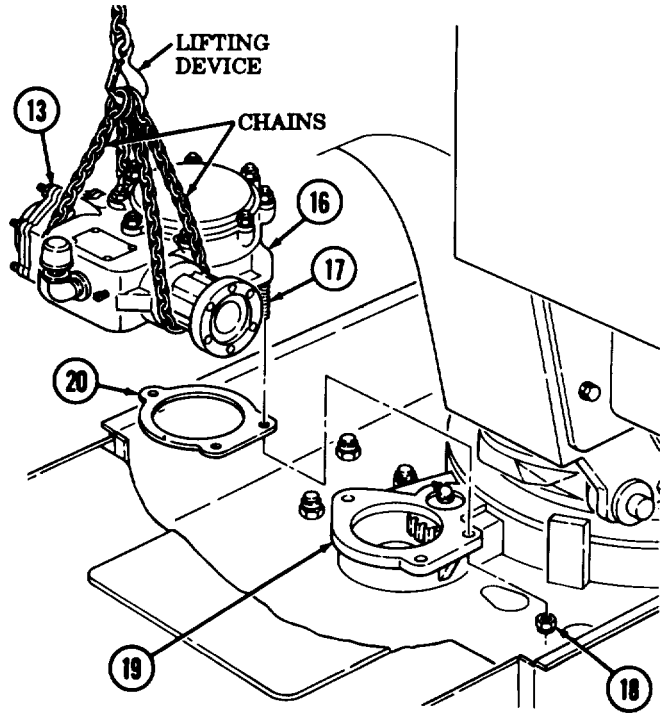

FOLLOW-ON TASKS: • Fill gear box of boom swing mechanism with gear oil (LO 9-2320-260-12).
• Check crane operation (TM 9-2320-260-10).

16-31. CABLE HOIST WINCH REPLACEMENT (M819)

THIS TASK COVERS:

a. Removal **b. Installation**

INITIAL SETUP

APPLICABLE MODELS
M819

TOOLS
General mechanic's tool kit (Appendix B, Item 1)
Mechanical puller kit (Appendix B, Item 14)
1-7/16-in. open-end wrench (Appendix B, Item 124)
1-1/2-in. open-end wrench (Appendix B, Item 125)
1-11/16-in. open-end wrench (Appendix B, Item 127)
Lifting device
Chains

MATERIALS/PARTS
Eight lockwashers (Appendix D, Item 210)
Two gaskets (Appendix D, Item 60)
Woodruff key (Appendix D, Item 546)
Locknut (Appendix D, Item 205.1)
Cap and plug set (Appendix C, Item 6)

PERSONNEL REQUIRED
Two

REFERENCES (TM)
LO 9-2320-260-12
TM 9-2320-260-10
TM 9-2320-260-20
TM 9-2320-260-34P-2

EQUIPMENT CONDITION
- Parking brake set (TM 9-2320-260-10).
- Hoist winch cable removed (TM 9-2320-260-20).

GENERAL SAFETY INSTRUCTIONS
- All personnel must stand clear during lifting operations.
- Ensure lifting capacity is greater than weight of cable hoist winch.

a. Removal

CAUTION

- Clean area around hoses and lines before removal to prevent entry of dirt. Damage will occur if dirt or dust enters system.
- Cap or plug all openings immediately after disconnecting lines and hoses to prevent contamination. Remove caps and plugs prior to installation. Failure to do so may result in damage to hydraulic system.

NOTE

- Have drainage container ready to catch oil.
- Tag hoses for installation.

1. Loosen two swivel nuts (13) on tubes (12) and disconnect hoses (1) and (2) from tubes (12).
2. Remove hoses (1) and (2) from elbow (6) and check valve (7).
3. Loosen swivel nut (9) and disconnect drain hose (11) from adapter elbow (8).
4. Remove two screws (5), lockwashers (4), hydraulic motor (3) gasket (14), and coupling (10) from drive housing (15). Remove woodruff key (36) from shaft (37\. Discard lockwashers (4) and woodruff key (36).
5. Attach chains to drive housing (15), drum (17), and lifting device. Take up slack in chains.
6. Remove three screws (24) and lockwashers (25) from drum housing (18) and bracket (26) on shipper (23). Discard lockwashers (25).

WARNING

- All personnel must stand clear during lifting operations. A swinging or shifting load may cause injury to personnel.
- Ensure lifting capacity is greater than weight of cable hoist winch. Failure to do so may result in injury to personnel or damage to equipment.

16-31. CABLE HOIST WINCH REPLACEMENT (M819) (Cont'd)

7. Remove three nuts (22), lockwashers (21), and screws (19) from drum housing (18) and bracket (20). Discard lockwashers (21). Lift cable hoist winch (16) from shipper (23) to work area.
8. Remove chains from drive housing (15), drum (17), and lifting device.
9. Remove four nuts (3o), bearing cap (31), and gasket (32) from drum housing (18). Discard gasket (32).
10. Remove locknut (33) and thrust washer (34) from shaft (27). Discard locknut (33).
11. Remove bearing cap (29), spacer (35), and gasket (28) from drum housing (18). Discard gasket (28).

NOTE

Assistant will help with step 12.

12. Using puller, separate and remove drum housing (18) and drum (17) from cable hoist winch (16) and shaft-(27).

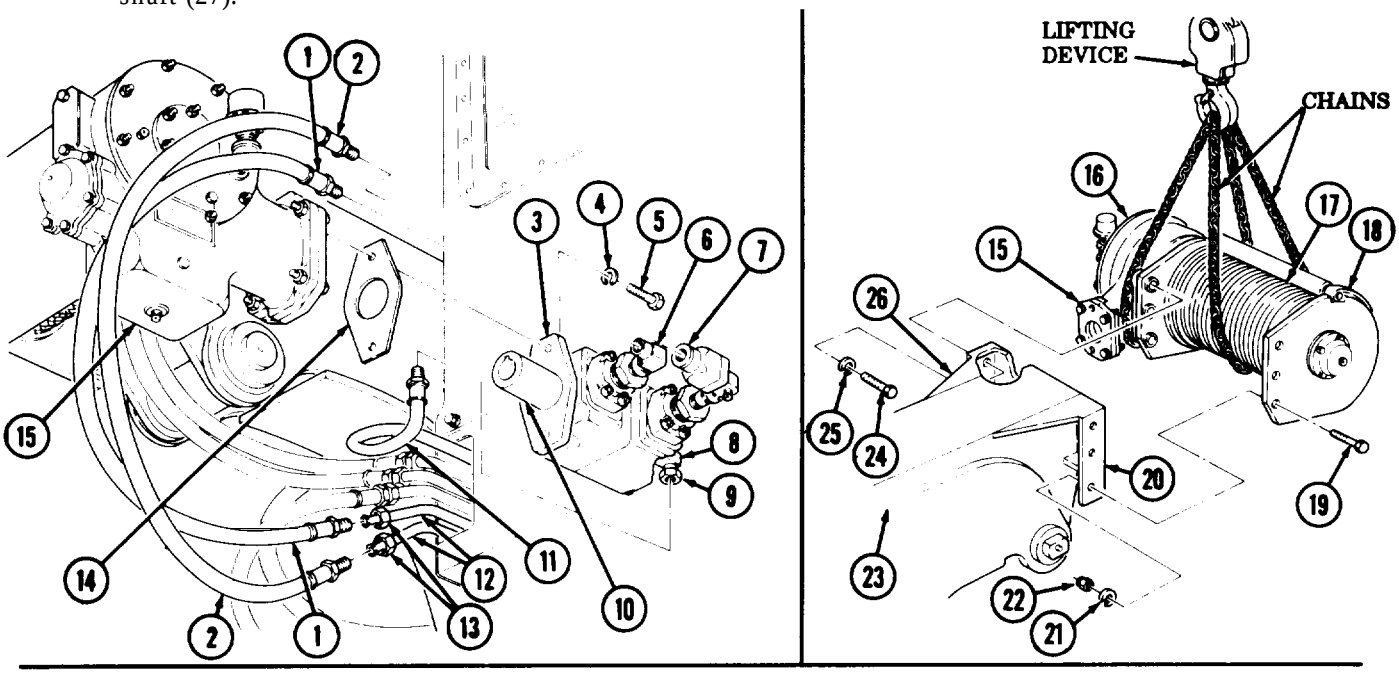

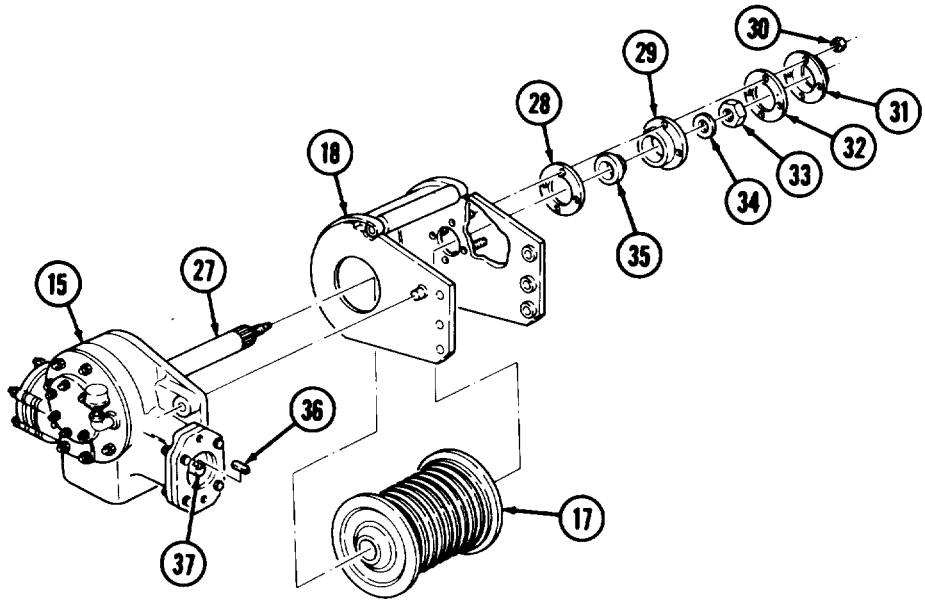

16-31. CABLE HOIST WINCH REPLACEMENT (M819) (Cont'd)

b. Installation

NOTE

Assistant will help with step 1.

1. Position drum (12) in drum housing (11), aline drum (12) and shaft. (2), and slide drum (12) and drum housing (11) on shaft (2).
2. Install new gasket (3), spacer (10), and bearing cap (4) on drum housing (11).
3. Install thrust washer (9) and new locknut (8) on shaft (2).
4. Install new gasket (7) and bearing cap (6) on drum housing (11) with four nuts (5).

NOTE

Assistant will help with steps 5 and 8.

5. Attach chains to drive housing (1), drum (12), and lifting device.

WARNING

- All personnel must stand clear during lifting operations. A swinging or shifting load may cause injury to personnel.
- Ensure lifting capacity is greater than weight of cable hoist winch. Failure to do so may result in injury to personnel or damage to equipment.

6. Lift cable hoist winch (15) and position on shipper (20) with holes in drum housing (11) alined with holes in brackets (17) and (23).
7. Install three new lockwashere (18) and screws (16) on bracket (17) and drum housing (11) with nuts (19).
8. Install three screws (21) and new lockwashers (22) on bracket (23) and drum housing (11).
9. Remove chains from drive housing(1), drum (12), and lifting device.
10. Position new woodruff key (13) in keyway of shaft (14), and with keyway on coupling (33) alined, install new gasket (37) and hydraulic motor (26) on drive housing (1) with two new lockwashers (27) and screws (28).
11. Install hoses (24) and (25) on elbow (29) and check valve (30).
12. Connect hoses (24) and (25) to tubes (34) with two swivel nuts (35).
13. Connect hose (36) to adapter elbow (31) with swivel nut (32).

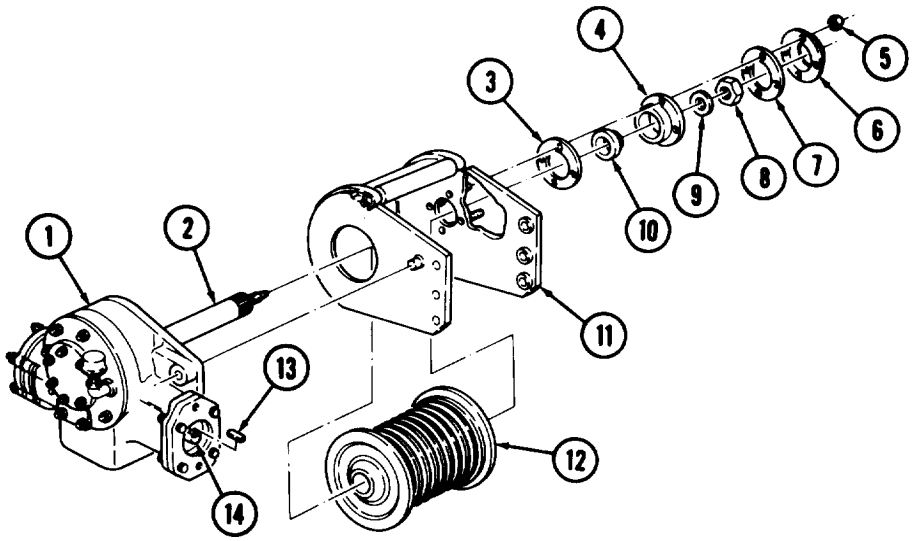

16-31. CABLE HOIST WINCH REPLACEMENT (M819) (Cont'd)

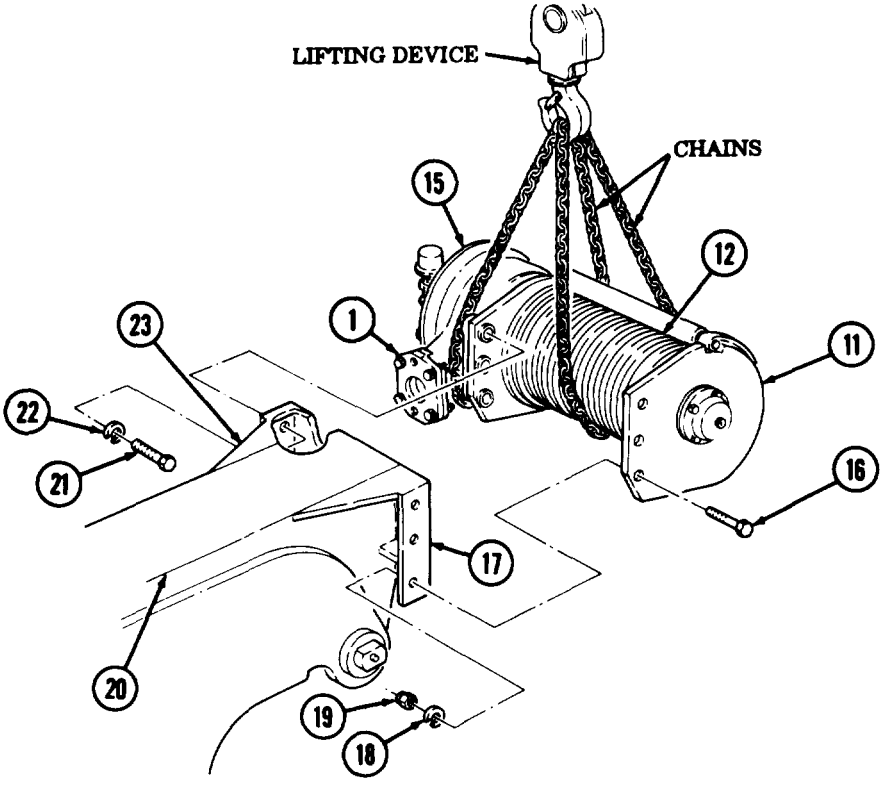

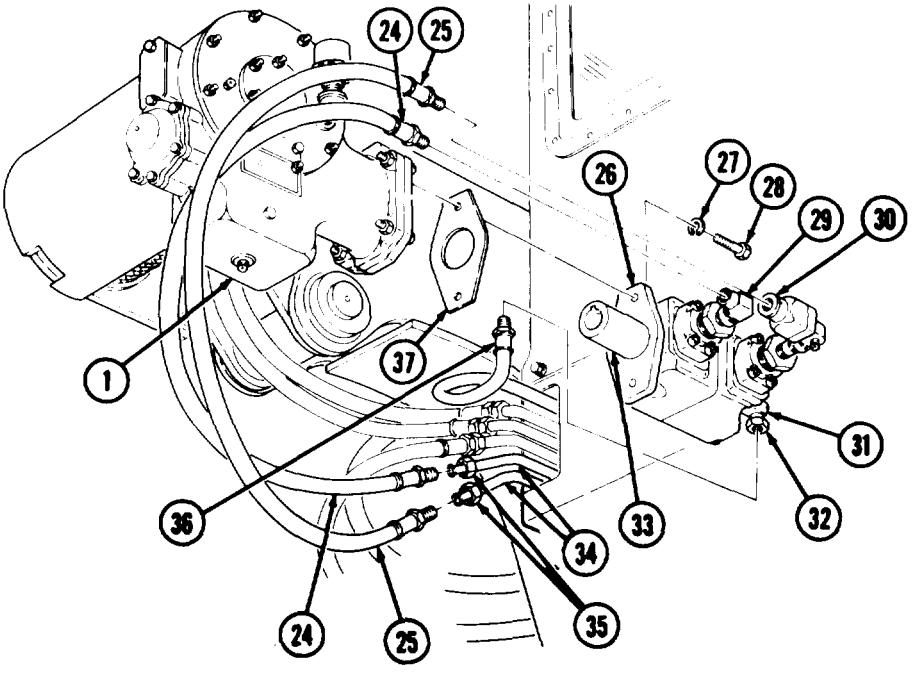

FOLLOW-ON TASKS:
- Lubricate cable drive and cable drum (LO 9-2320-260-12).
- Install hoist winch cable (TM 9-2320-260-20).
- Check hoist operation (TM 9-2320-260-10).

16-32. HYDRAULIC SWIVEL VALVE REPLACEMENT (M819)

THIS TASK COVERS:

a. Removal **b. Installation**

INITIAL SETUP

APPLICABLE MODELS
M819

TOOLS
General mechanic's tool kit (Appendix B, Item 1)
1-1/16-in. open-end wrench (Appendix B, Item 123)
1-1/2-in. open-end wrench (Appendix B, Item 125)
1-11/16-in. open-end wrench (Appendix B, Item 127)
Lifting device
Chains

MATERIALS/PARTS
Antiseize tape (Appendix C, Item 50)
Cap and plug set (Appendix C, Item 6)

REFERENCES (TM)
LO 9-2320-260-12
TM 9-2320-260-10
TM 9-2320-260-34P-2

EQUIPMENT CONDITION
- Parking brake set (TM 9-2320-260-10).
- Boom raised and supported (TM 9-2320-260-10).
- Hydraulic oil tank drained (LO 9-2320-260-12).

a. Removal

CAUTION

- Clean area around hoses and lines before removal to prevent entry of dirt. Damage will occur if dirt or dust enters system.
- Cap or plug all openings immediately after disconnecting lines and hoses to prevent contamination. Remove caps and plugs prior to installation. Failure to do so may result in damage to hydraulic system.

NOTE

l Tag hoses for installation.
. Have drainage container ready to catch oil.

1. Disconnect hoses (3) and (5) from elbows (2) and (4) on swing motor (1).
2. Disconnect return hose (9) from coupling (8) on 45 degree elbow (7).
3. Disconnect pressure hose (10) from coupling (11) on relief valve (12).
4. Disconnect drain hose (13) from elbow (14) at hydraulic oil reservoir (6).
5. Remove seven screws (18) and cover (19) from mounting brackets (23).
6. Disconnect drain hose (21) from coupling (20) on control valve bank (22).
7. Disconnect drain hose (16) from elbow (15) on hoist winch motor (17).

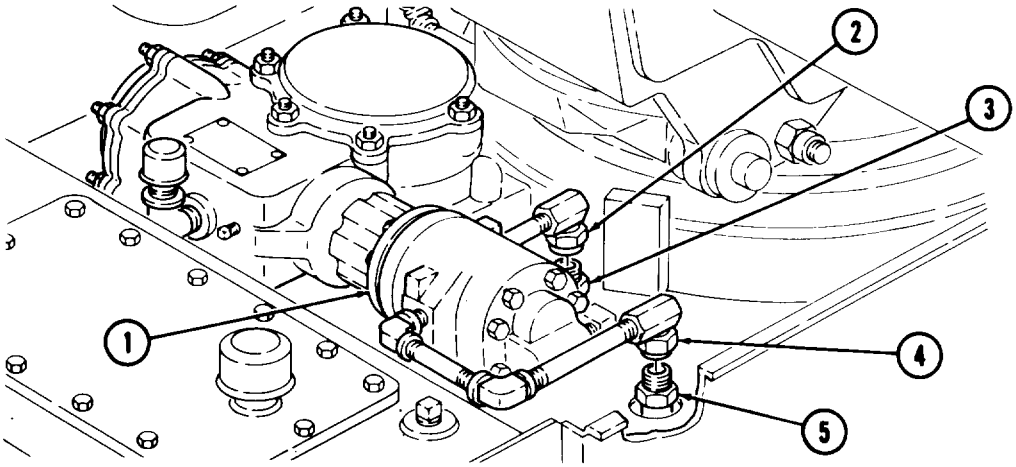

16-32. HYDRAULIC SWIVEL VALVE REPLACEMENT (M819) (Cont'd)

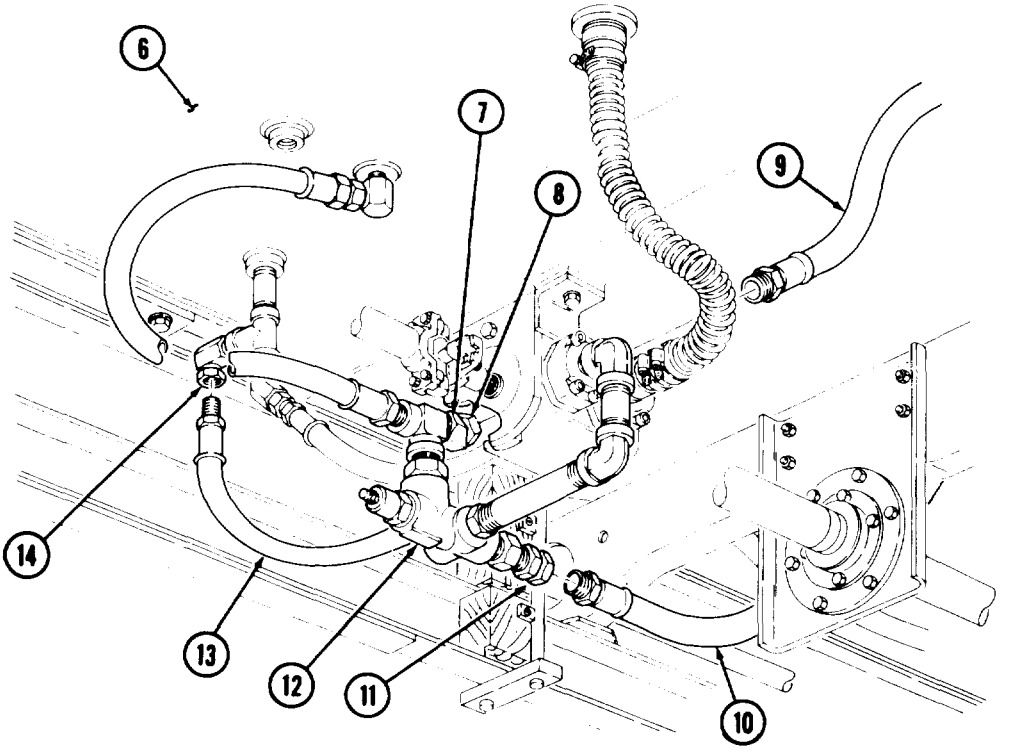

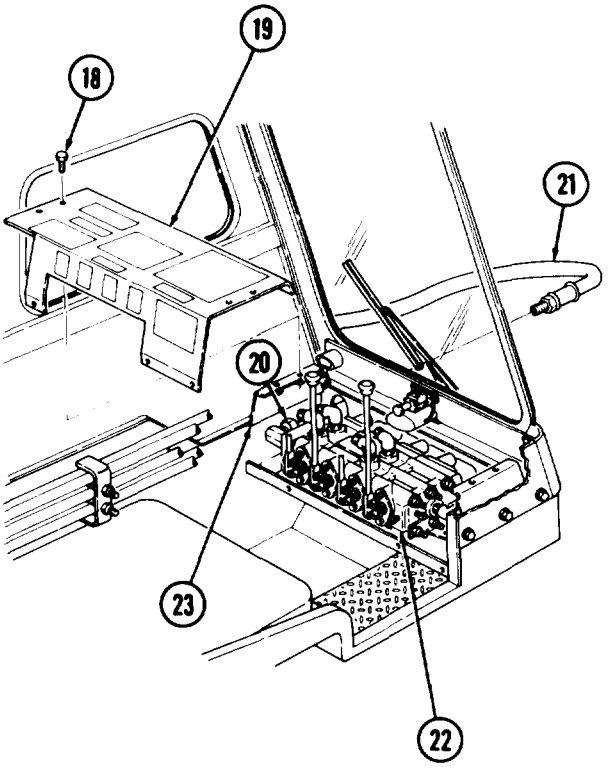

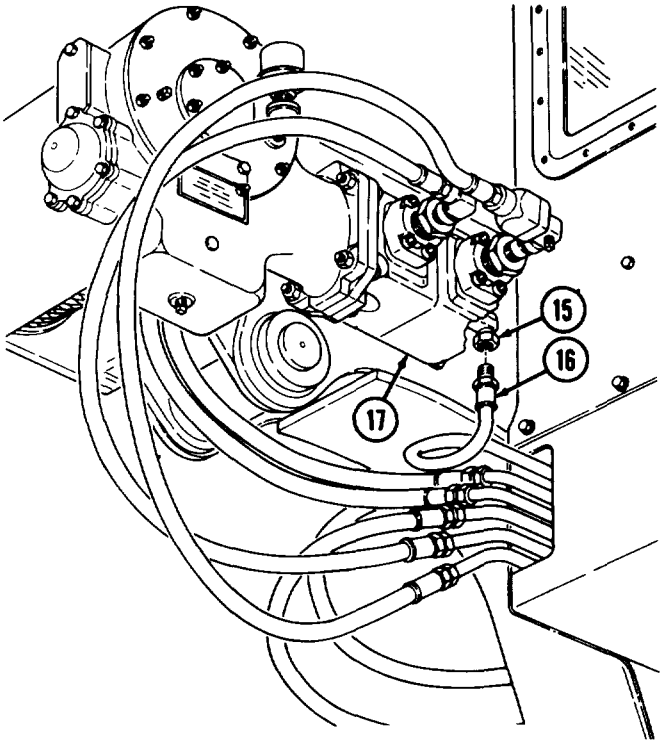

16-32. HYDRAULIC SWIVEL VALVE REPLACEMENT(M819) (Cont'd)

8. Remove hoist winch drain hose (10) from end of tee fitting (13).
9. Remove control valve bank drain hose (11) and bushing (12) from tee fitting (13).
10. Remove tee fitting (13) from swivel valve (4).

NOTE

The four hoses on face of swivel must be disconnected from control valve bank before removal from swivel valve.

11. Remove two hoses (7) and (8) from swivel valve (4).
12. Disconnect wire (1) from wire (9).
13. Working under vehicle at bottom of pivot post support (24), disconnect wire **(6)** from wire (25).
14. Remove two screws (23), washers (22), and plates (21) from support cap (20) and swivel valve plug (5).
15. Remove two screws (2) from top of swivel valve (4), and attach chain to swivel valve (4) with two longer screws (2) and washers (3).
16. Attach chain to lifting device.

NOTE

Assistant will help with steps 17 through 23.

17. Lift swivel valve (4) high enough to permit access to hose connections.
18. Remove two swing motor hoses (16) from coupling nuts (14).
19. Remove two coupling nuts (14) and pipe nipples (15) from swivel valve plug (5).
20. Disconnect drain hose (19) from swivel valve plug (5).
21. Disconnect hoses (17) and (18) from swivel valve plug (5).
22. Remove swivel valve (4) horn support cap (20).
23. Remove chain from lifting device and remove two screws (2), washers (3), and chain from swivel **valve** (4).

b. Installation

1. Wrap male threads of swivel valve plug (5), hoses (7) and (8), winch drain hose (10), valve bank drain hose (11), tee fitting (13), and bushing (12) with antiseize tape.
2. Install two pipe nipples (15) on marked lower ports of swivel valve plug (5).
3. Install chain on swivel valve (4) with two longer screws (2) and washers (3) and attach chain to lifting device.

NOTE

Assistant will help with steps 3 through 10.

4. Position swivel valve (4) over pivot post (24) above support cap (20).
5. Connect two swing motor hoses (16) to pipe nipples (15) with coupling nuts (14).
6. Connect pressure hose (17) and return hose (18) to swivel valve plug (5).
7. Connect drain hose (19) to swivel valve plug (5).
8. Position two plates (21) and washers (22) on support cap (20) and start screws (23) into support cap (20). Do not tighten screws (23).
9. Carefully lower swivel valve (4) and aline swivel plug (5) with support cap (20).

16-32. HYDRAULIC SWIVEL VALVE REPLACEMENT (M819) (Contd)

10. Lower swivel valve (4) until plates (21) aline with notches in swivel valve plug (5). Tighten screws (23).
11. Remove two screws (2), washers (3), and chain from swivel valve (4) and install original screws (2) into swivel valve (4). Remove chain from lifting device.
12. Connect two hoses (8) and (7) to swivel valve (4) and control valve bank.
13. Install tee fitting (13) on swivel valve (4).
14. Connect hoist winch drain hose (10) to tee fitting (13).
15. Connect bushing (12) and control valve bank drain hose (11) to tee fitting (13).
16. Connect wire (1) to wire (9).
17. Working under vehicle, connect wire (6) to wire (25).

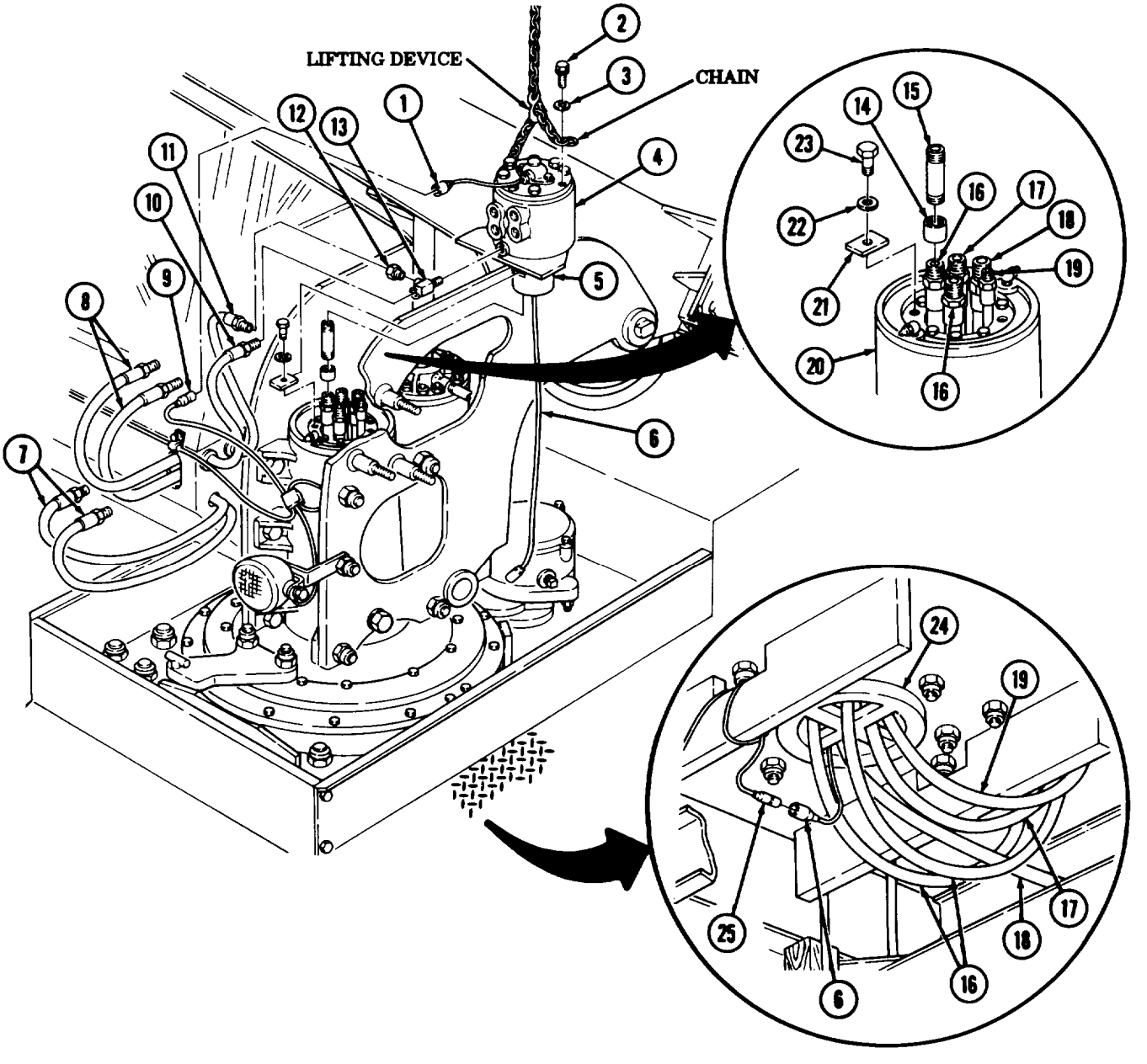

16-32. HYDRAULIC SWIVEL VALVE REPLACEMENT (M819) (Cont'd)

18. Connect drain hose (3) to coupling(5) on control valve bank (4).
19. Install cover (2) on mounting brackets (6) with seven screws (1).
20. Connect drain hose (8) to elbow (7) on hoist winch motor (9).
21. Connect drain hose (17) to elbow (18) at hydraulic oil reservoir (10).
22. Connect pressure hose (15) to coupling (14) on relief valve (16).
23. Connect return hose (13) to coupling (12) on 45° elbow (11).
24. Connect hoses (22) and (20) to elbows (21) and (19) on swing motor (23).

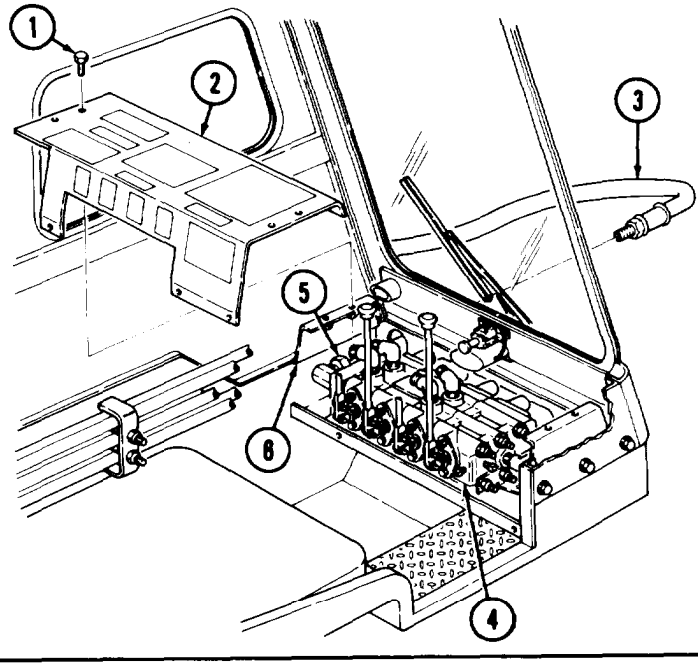

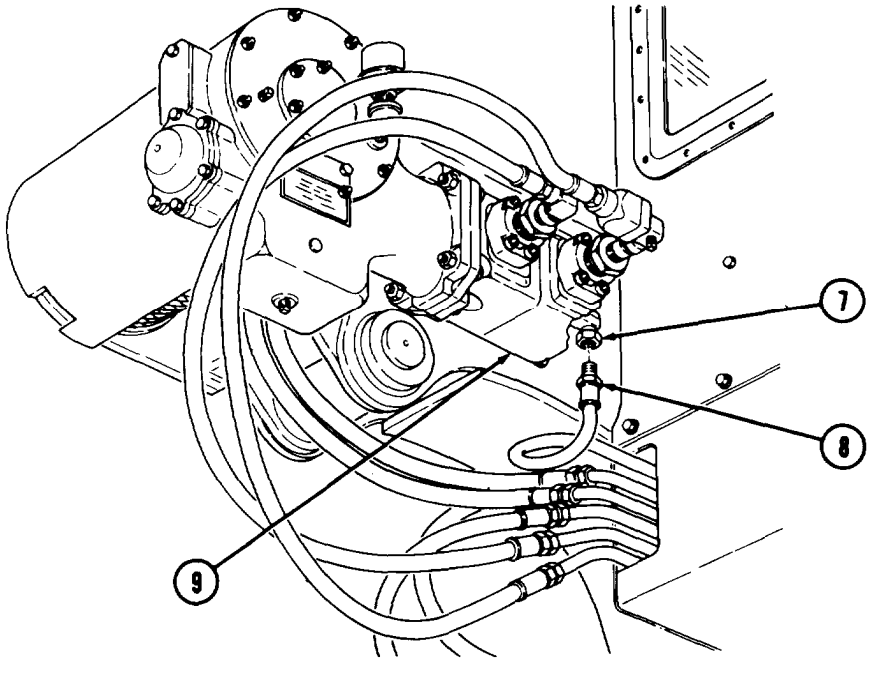

16-32. HYDRAULIC SWIVEL VALVE REPLACEMENT (M819) (Contd)

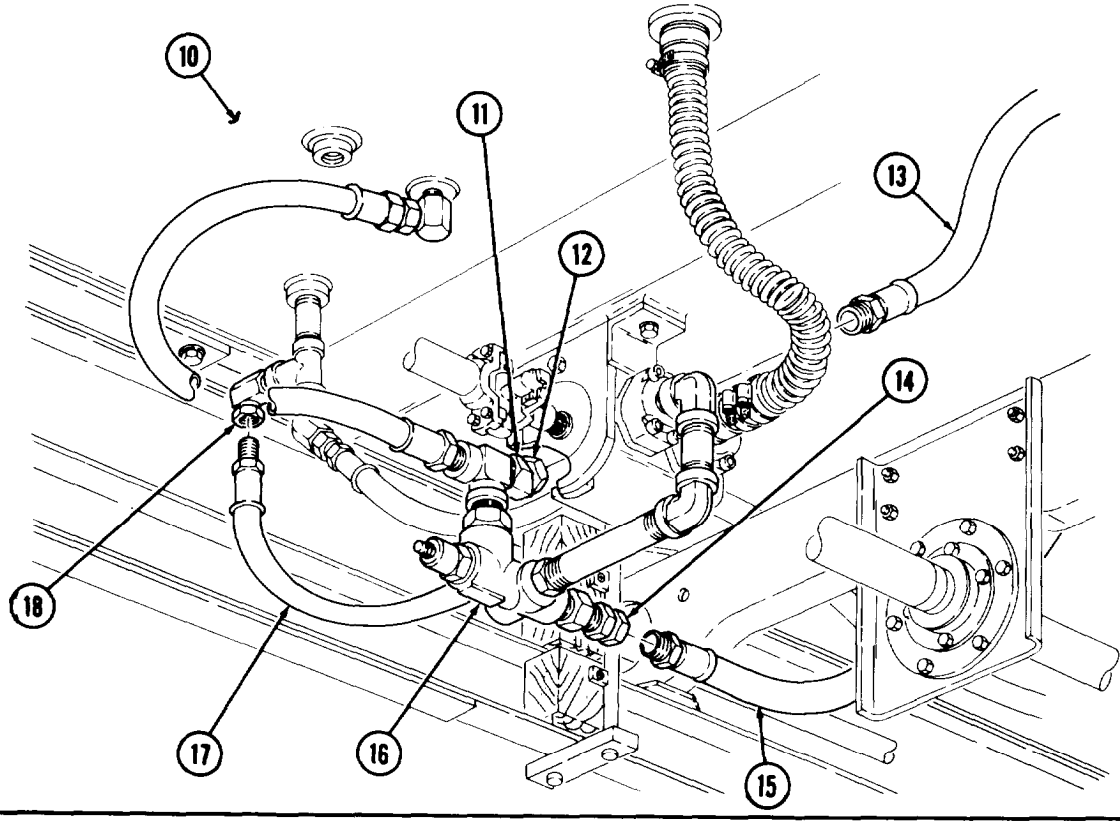

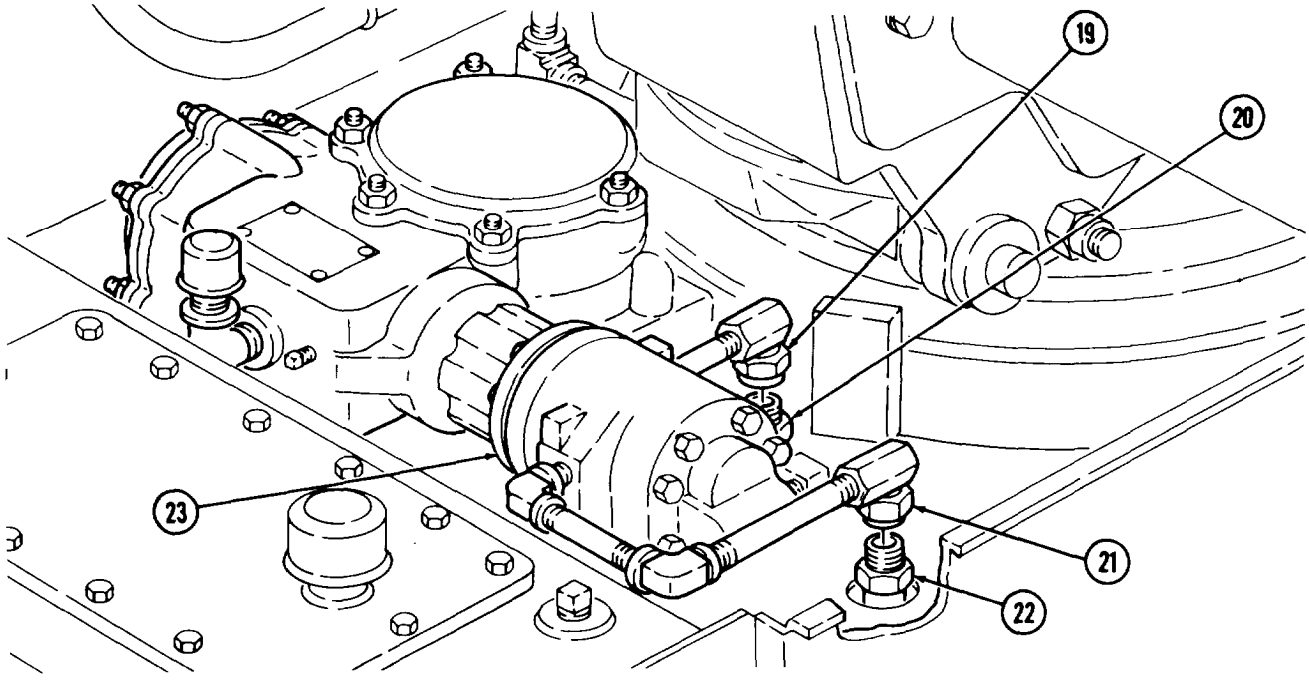

FOLLOW-ON TASKS:
- Remove boom support (TM 9-2320-260-10).
- Fill hydraulic oil tank (LO 9-2320-260-12).
- Operate crane and check for leaks (TM 9-2320-260-10).

16-33. BOOM LIFT CYLINDER MAINTENANCE (M819)

THIS TASK COVERS:

a. Removal
b. Disassembly
c. Cleaning and Inspection
d. Repair
e. Assembly

INITIAL SETUP

APPLICABLE MODELS
M819

TOOLS
General mechanic's tool kit (Appendix B, Item 1)
14-in. pipe wrench (Appendix B, Item 129)
1-5/8-in. open-end wrench (Appendix B, Item 126)
1-11/16-in. open-end wrench (Appendix B, Item 127)
Bushing driver (Appendix B, Item 131)
Chain
Lifting device

MATERIALS/PARTS
Two Cotter pins (Appendix D, Item 17)
Seal (Appendix D, Item 408)
Seal (Appendix D, Item 409)
Seal (Appendix D, Item 410)
Seal (Appendix D, Item 412)
Seal (Appendix D, Item 413)
Lubricating oil (Appendix C, Item 20)
GM grease (Appendix C, Item 14)

PERSONNEL REQUIRED
Two

REFERENCES (TM)
LO 9-2320-260-12
TM 9-2320-260-10
TM 9-2320-260-20
TM 9-2320-260-34P-2

EQUIPMENT CONDITION
- Remove lift cylinder check valve (para. 16-38).
- Remove spare tire (TM 9-2320-260-10).
- Remove cab side window (TM 9-2320-260-20).
- Drain hydraulic oil tank (LO 9-2320-260-12).

GENERAL SAFETY INSTRUCTIONS
- All personnel must stand clear during lifting operations.
- Ensure lifting capacity is greater than weight of boom lift cylinder.

a. Removal

1. Raise boom (6) to maximum height and hold with hoist or securely block. Maximum angle is 41 degrees (TM 9-2320-260-10),
2. Loosen two jamnuts (2) and remove two setscrews (1) from boom trunnions (3).
3. Drive out pivot shaft (8) from boom (6) and trunnion (4) on piston rod (5).
4. Remove elbow (14) and pipe (15) from elbow (16).
5. Remove elbow (16) and nipple (17) from lower port (20) of lift cylinder (22).
6. Remove hose (13) from tube (24) and elbow (12).
7. Remove elbow (12) and nipple (11) from port (10) in cylinder head (9).
8. Attach chain to lift cylinder (22) and lifting device. Take up slack in chain.

NOTE

Assistant will help with steps 9 and 10.

9. Remove cotter pin (23) and pivot pin (19) from lower trunnion of lift cylinder (22) and boom support bores (21). Discard cotter pin (23).

16-33. BOOM LIFT CYLINDER MAINTENANCE (M819) (Cont'd)

WARNING

- All personnel must stand clear during lifting operations. A swinging or shifting load may cause injury to personnel.
- Ensure lifting capacity is greater than weight of boom lift cylinder. Failure to do so may result in injury to personnel or damage to equipment.

10. Raise and guide lift cylinder (22) up and out of boom support (7) and place in work area.
11. Remove grease fitting (18) from pin (19).
12. Remove chain from lift cylinder (22) and lifting device.

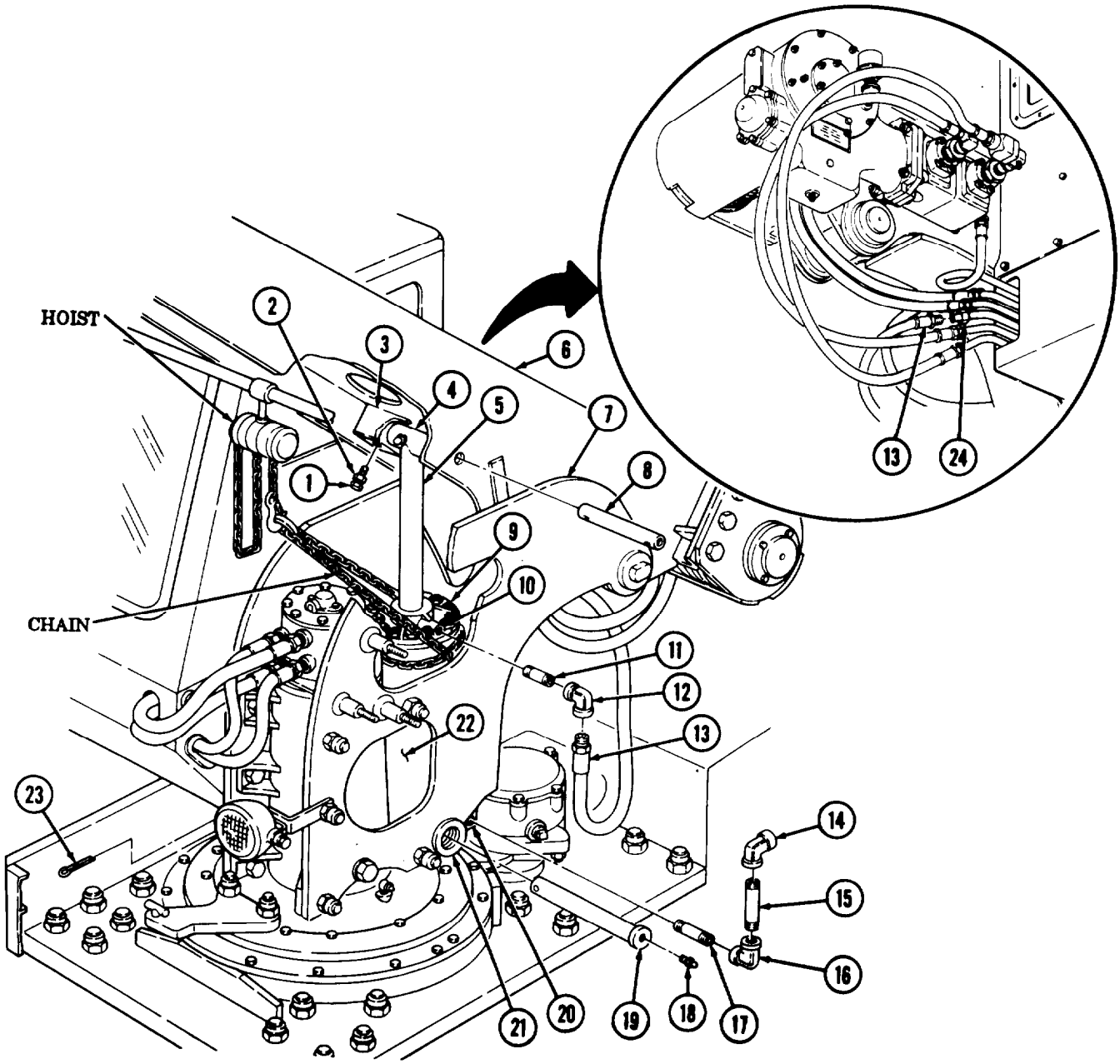

16-33. BOOM LIFT CYLINDER MAINTENANCE (M819) (Cont'd)

b. Disassembly

1. Remove twelve nuts (6) from studs (4) and slide cylinder head (5) UP piston rod (11).
2. Pull piston rod (11) and cylinder head (5) out of lift cylinder (3).
3. Remove cotter pin (2), nut (1), piston (13), and cylinder head (5) from piston rod (11). Discard cotter pin (2).
4. Remove seals (15) and (14) from piston (13). Discard seals (14) and (15).
5. Remove seals (7), (8), and (12) from cylinder head (5). Discard seals (7), (8), and (12).
6. Remove grease fitting (10) from trunnion (9) of piston rod (11).

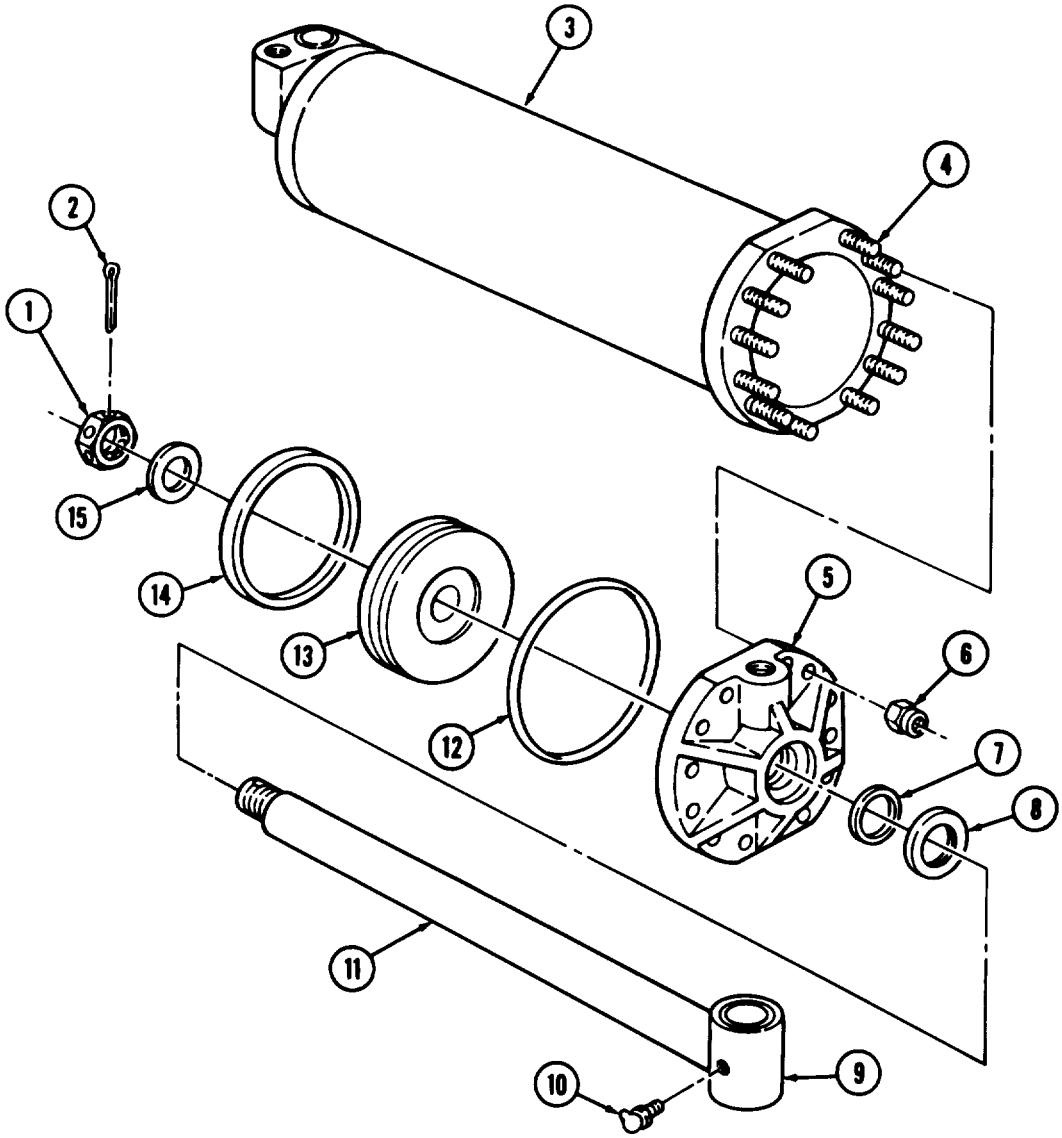

16-33. BOOM LIFT CYLINDER MAINTENANCE (M819) (Cont'd)

c. Cleaning and Inspection

1. For general cleaning instructions, refer to para. 2-8.
2. For general inspection instructions, refer to para. 2-9.
   a. Inspect piston rod (11), pivot pins (19) and (20), and lift cylinder (3) for chips, nicks, burrs, scoring, and rust.
   b. Inspect piston (13) and cylinder head (5) for nick, burrs, scoring, and chipped or broken edges of seal grooves.
   c. Inspect studs (4), two bushings (16), bushings (18), and bushing (17).

d. Repair

1. For general repair procedures, refer to para. 2-10.
   a. Minor nicks, chips, burrs, and scoring of piston rod (11), pivot pins (19) and (20), lift cylinder (3), cylinder head (5), and bushings (16) and (18) may be repaired with fine mill file or crocus cloth.
   b. Replace damaged studs (4) and bushings (16), (18), and (17).
   c. Chipped or cracked seal grooves and notches on cylinder head (5) and piston (13) are unrepairable. Replace parts.
   d. Minor surface rust and scoring in bore of cylinder (3) maybe removed. Replace part if damage is more severe.

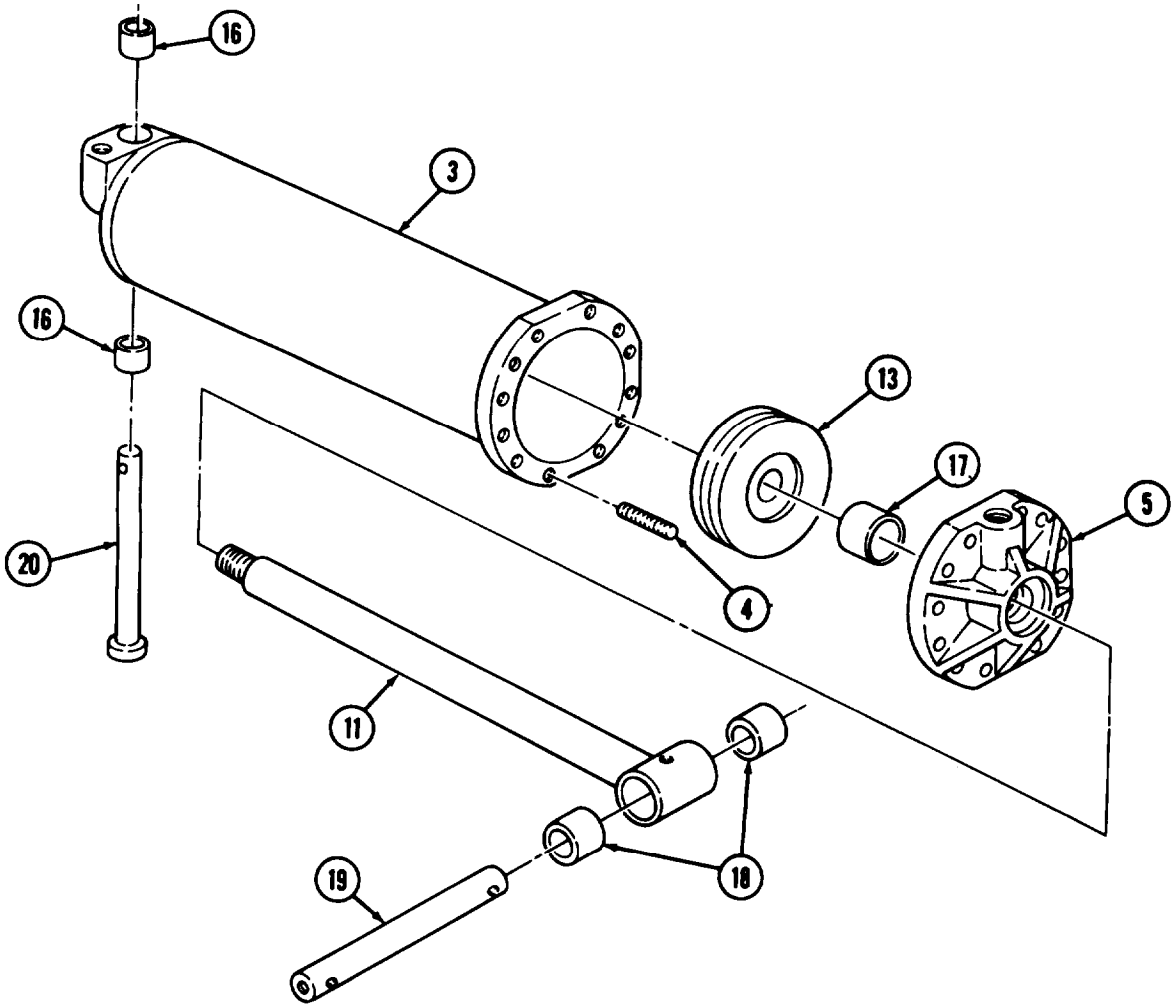

16-33. BOOM LIFT CYLINDER MAINTENANCE (M819) (Cont'd)

e. Assembly

NOTE

- Coat all internal surfaces and parts with lubricating oil before assembly.
- Coat bushings and pivot pins with light coat GM grease before assembly.

1. Install grease fitting (8) in piston rod trunnion (7).
2. Install new seals (9), (10), and (12) in cylinder head (11). Slide cylinder head (11) on piston rod (6).
3. Install new seals (14) and (15) on piston (13). Ensure seal (14) is not rolled in groove on piston (13).
4. Install piston (13) on piston rod (6) with nut (16) and new cotter pin (17).
5. Carefully slide piston (13) and piston rod (6) into lift cylinder (2).
6. Aline cylinder head port(4) with lift cylinder port (1) and slide cylinder head (1) down piston rod (6) and over studs (3).
7. Install cylinder head (11) on lift cylinder (2) with twelve nuts (5). Tighten nuts (5) evenly in star pattern.

f. Installation

Perform step 1 if boom was not removed.

1. Raise and support boom (20) (TM 9-2320-260-10).
2. Attach chains to lift cylinder (2) and lifting device.

WARNING

- All personnel must stand clear during lifting operations. A swinging or shifting load may cause injury to personnel.
- Ensure lifting capacity is greater than weight of boom lift cylinder. Failure to do so may result in injury to personnel or damage t.o equipment.

NOTE

Assistant will help with steps 3 through 9.

3. Move lift cylinder (2) into position in boom support (21). Aline lift cylinder port (1) and cylinder head port (4) to the right.
4. Aline lower trunnion of lift cylinder (2) with pivot pin bores (32).
5. Install lift cylinder (2) on boom support (21) with lower pivot pin (31) and new cotter pin (33).
6. Install grease fitting (30) in lower pivot pin (31).
7. Manually extend piston rod (6) and aline trunnion (7) with pivot pin bores (19) in boom (20).
8. Install piston rod trunnion (7) on boom (20) with pivot pin (22). Ensure setscrew notches in pivot pin (22) aline with setscrew holes in boom trunnions (18).
9. Install two setscrews (34) and jamnuts (35) in boom trunnions (18) and tighten jamnuts (35).
10. Remove chain from lift cylinder (2) and lifting device.
11. Install nipple (29), elbow (28), nipple (27), and elbow (26) in lift cylinder port (1).
12. Install nipple (23) and elbow (24) in cylinder head port (4).
13. Install hose (25) on elbow (24) and tube (36).

16-33. BOOM LIFT CYLINDER MAINTENANCE (M819) (Cont'd)

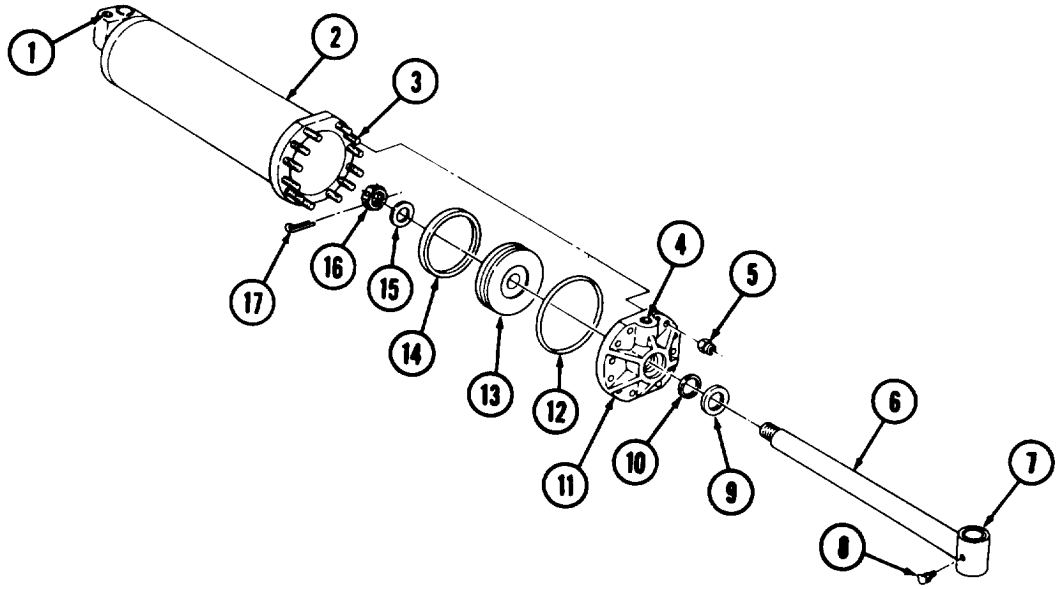

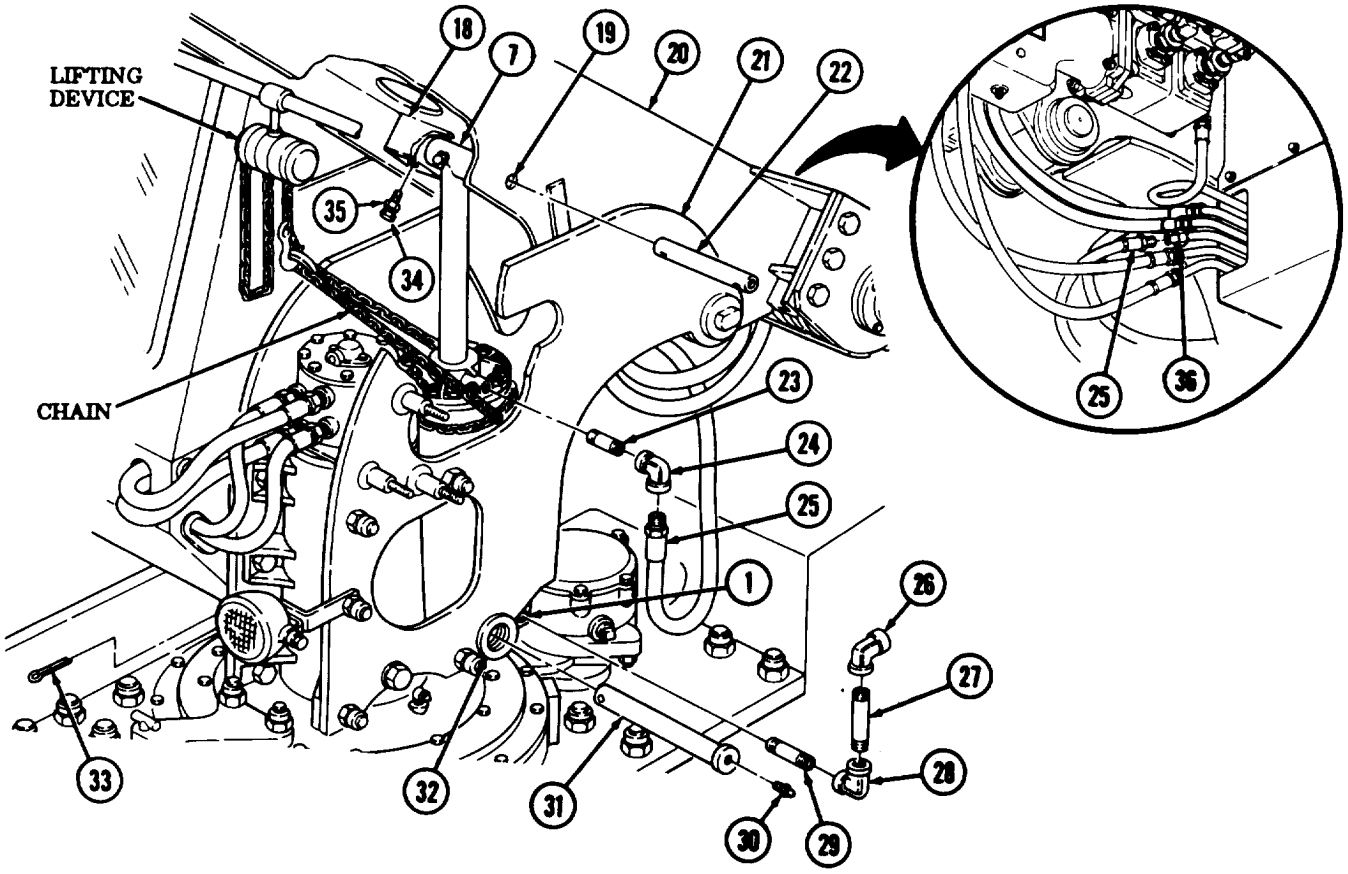

FOLLOW-ON TASKS:
- Install lift cylinder check valve (para. 16-38).
- Fill hydraulic oil tank (LO 9-2320-260-12).
- Check crane operation and check for leaks (TM 9-2320-260-10).
- Install spare tire (TM 9-2320-260-10).
- Install cab side window (TM 9-2320-260-20).

16-34. CRANE SHIPPER, BOOM, BOOM EXTENSION, AND ROLLERS MAINTENANCE (M819)

THIS TASK COVERS:

a. Shipper Removal
b. Boom Extension Removal
c. Boom Removal
d. Extension Cylinder Removal
e. Upper Roller Removal
f. Boom Extension Disassembly
g. Front Lower Roller Disassembly
h. Middle Lower Roller Disassembly
i. Upper Roller Disassembly
j. Cleaning and Inspection
k. Repair
l. Upper Roller Assembly and Adjustment
m. Middle Lower Roller Assembly
n. Front Lower Roller Assembly and Adjustment
o. Boom Extension Assembly
P. Upper Roller Installation
q. Extension Cylinder Installation
r. Boom Installation
s. Boom Extension Installation
t. Shipper Installation

INITIAL SETUP

APPLICABLE MODELS
M819

TOOLS
General mechanic's tool kit (Appendix B, Item 1)
1-5/8-in. open-end wrench (Appendix B, Item 126)
1-11/16-in. open-end wrench (Appendix B, Item 127)
14-in. pipe wrench (Appendix B, Item 129)
Mechanical puller kit (Appendix B, Item .14)
Arbor press (Appendix B, Item 7)
Lifting device
Two chains
Spreader bar
A-frame
Jack stand

MATERIALS/PARTS
Locking Plate (Appendix D, Item 165)
Four cotter pins (Appendix D, Item 18)
Six lockwashers (Appendix D, Item 218)
Nine lockwashers (Appendix D, Item 219)
Eight lockwashers (Appendix D, Item 211)
Shims (Appendix D, Item 492)
Shims (Appendix D, Item 494)
Shims (Appendix D, Item 489)

MATERIALS/PARTS (Contd)
Shims (Appendix D, Item 490)
Cap and plug set (Appendix C, Item **6)**
Antiseize tape (Appendix C, Item 50)

PERSONNEL REQUIRED
Two

REFERENCES (TM)
LO 9-2320-260-12
TM 9-237
TM 9-2320-260-10
TM 9-2320-260-20
TM 9-2320-260-34P-2

EQUIPMENT CONDITION
- Spare tire removed (TM 9-2320-260-10).
- Floodlight and wiring harness removed (TM 9-2320-260-20).
- Crane cab (Gondola) removed (para. 16-29).
- Cable hoist winch and hoses removed (para. 16-31).

GENERAL SAFETY INSTRUCTIONS
- All personnel must stand clear during lifting instructions.
- Ensure lifting capacity is greater than weight of shipper.

a. Shipper Removal

1. Attach chain to holdboom (1) and boom extension (4) to shipper (2) during removal.
2. Attach chain to shipper (2) and lifting device and take up slack in chain.
3. Disconnect boom supports (3) from shipper (2) (TM 9-2320-260-10).

NOTE

Assistant will help with steps 4 through 18.

4. Lift shipper (2) to provide clearance to remove lift cylinder pivot pin (9).

16-34. CRANE SHIPPER, BOOM, BOOM EXTENSION, AND ROLLERS MAINTENANCE (M819) (Cont'd)

5. Loosen two jamnuts (6) and remove two screws (5) from shipper trunnions (7).
6. Remove pivot pin (9) from shipper (2), lift cylinder trunnion (8), and shipper trunnions (7).
7. Lower shipper (2) to horizontal position.

CAUTION

- Clean area around hoses and lines before removal to prevent entry of dirt. Damage will occur if dirt or dust enters system.
- Cap or plug all openings immediately after disconnecting lines and hoses to prevent contamination. Failure to do so may result in damage to hydraulic system.

NOTE

Tag hoses for installation.

8. Loosen swivel nuts (13) and disconnect two hoses (12) from tubes (10).
9. Remove two hoses (12) from elbows (11).
10. Connect shipper braces (3) to shipper (2) and adjust shipper braces (3) so that shipper (2) rests in horizontal position (TM 9-2320-260-10).
11. Remove chain from shipper (2) and lifting device.

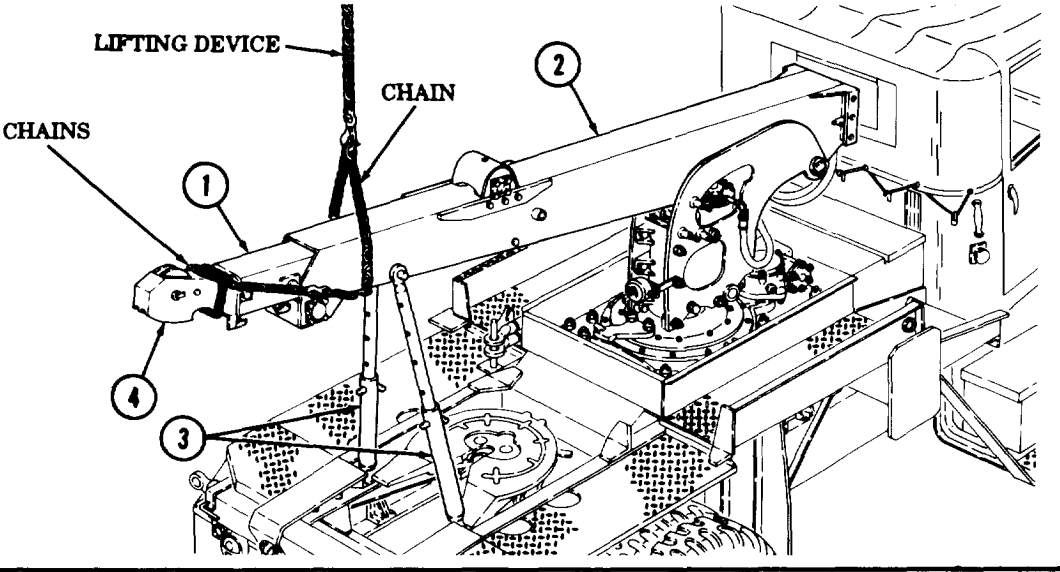

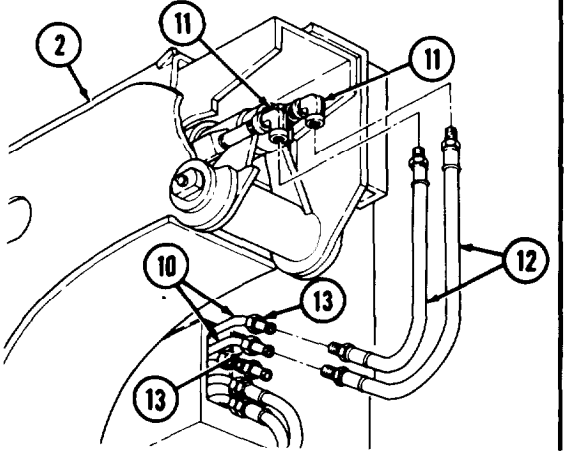

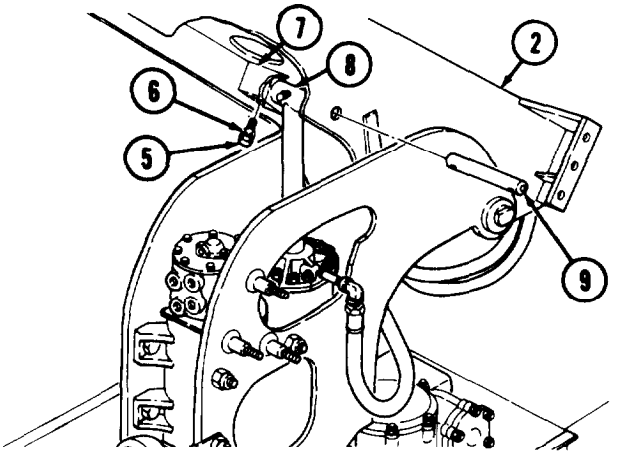

16-34. CRANE SHIPPER, BOOM, BOOM EXTENSION, AND ROLLERS MAINTENANCE (M819) (Cont'd)

12. Attach chain and spreader bar t.o shipper (2) and lifting device. Take up slack in chain.
13. Disconnect shipper braces (4) from shipper (2) (TM 9-2320-260-10).
14. Remove two grease fittings (8) from pivot pin (9).
15. Remove nut (5) and screw (6) from trunnion (7) and pivot pin (9).
16. Remove pivot pin (9) from shipper (2) and support (3).
17. Attach two guide ropes to shipper (2) and boom extension (1).

WARNING

- All personnel must stand clear during lifting operations. A swinging or shifting load may cause injury to personnel.
- Ensure lifting capacity is greater than weight of shipper. Failure to do so may result in injury to personnel or damage to equipment.

NOTE

Three assistants will help with step 18.

18. Lift shipper (2) away from boom support (3) and vehicle, and set shipper (2) on wood blocks.
19. Remove guide ropes, chains, and spreader bar from boom extension (1), shipper (2), and lifting device.

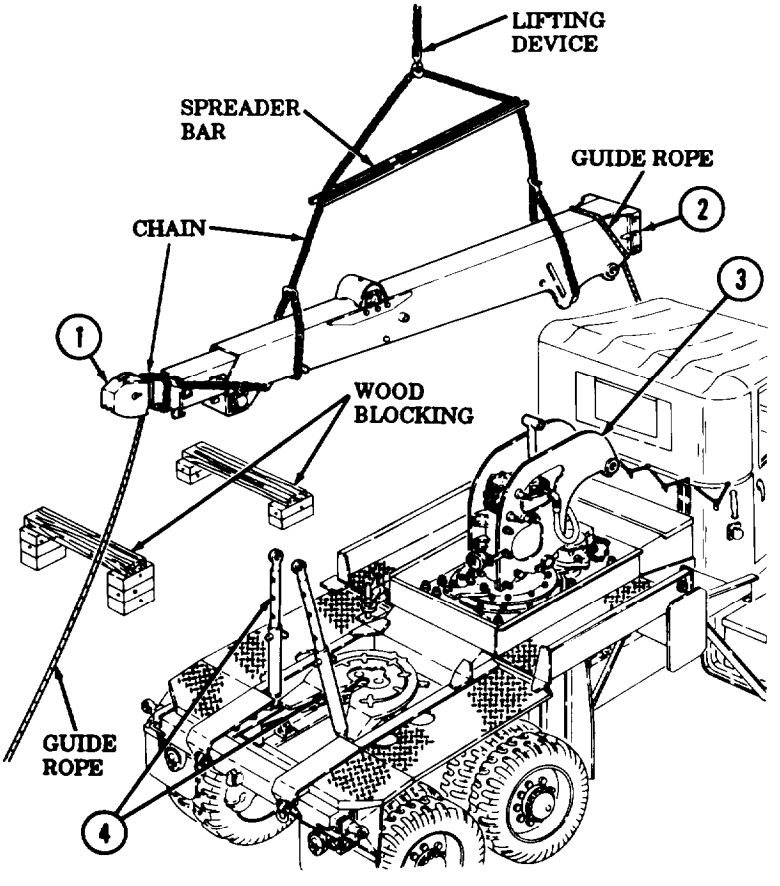

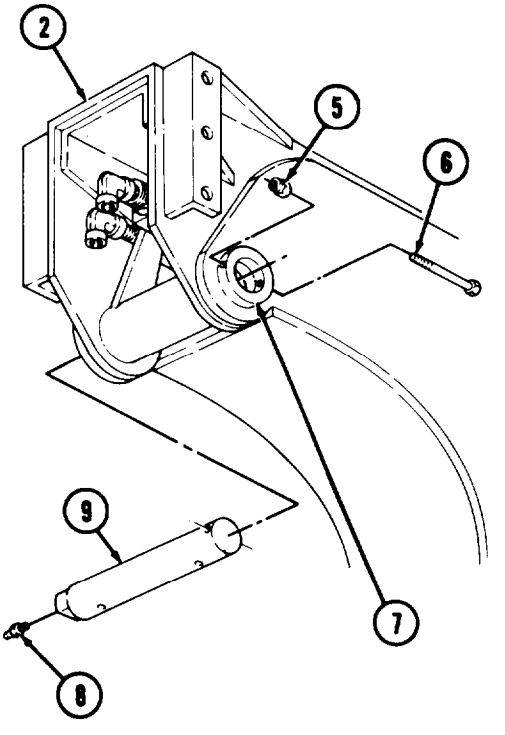

16-34. CRANE SHIPPER, BOOM, BOOM EXTENSION, AND ROLLERS MAINTENANCE (M819) (Cont'd)

b. Boom Extension Removal

1. Remove two Iinch pins (11) and two pins (10) from boom extension (1) and boom (12),
2. Attach chain to boom extension (1) and lifting device. Take up slack in chain.

NOTE

Two assistants will help with steps 3 through 7.

3. Using lifting device attached to A-frame, raise or lower boom extension (1) while walking boom extension (1) out of boom (12) to expose eight feet of boom extension (1).
4. Place jack stand under boom extension (1) and remove chain from boom extension (1).
5. Attach chain and spreader bar to center of balance of boom extension (1).

WARNING

- All personnel must stand clear during lifting operations. A swinging or shifting load may cause injury to personnel.
- Ensure lifting capacity is greater than weight of boom extension. Failure to do so may result in injury to personnel or damage to equipment.

6. Continue raising or lowering lifting device while removing boom extension (1) from boom (12).
7. Set boom extension (1) on wood blocks and remove chain and spreader bar from boom extension (1) and lifting device.

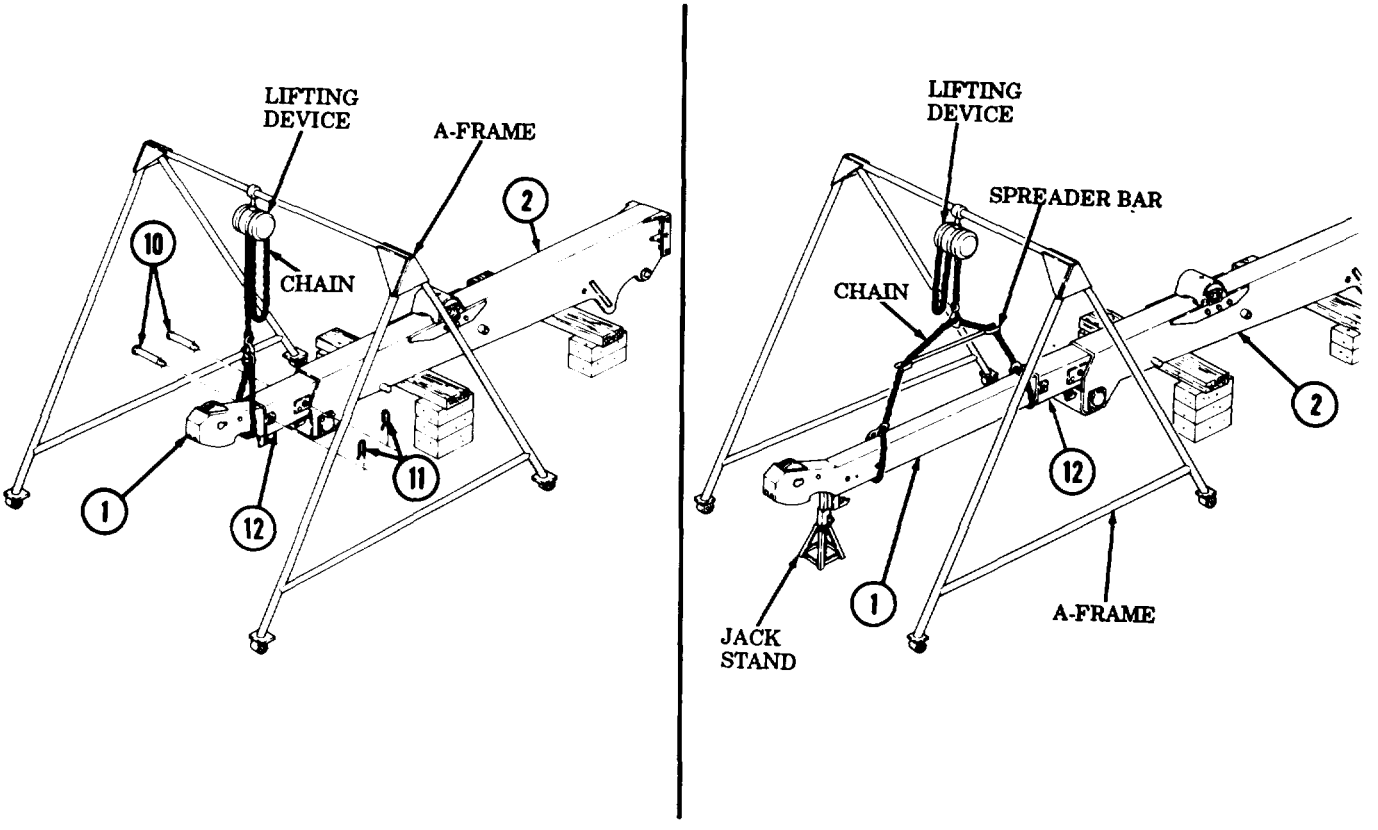

16-34. CRANE SHIPPER, BOOM, BOOM EXTENSION, AND ROLLERS MAINTENANCE (M819) (Contd)

c. Boom Removal

1. From rear of shipper (2), remove elbow (6), nut (7), locking plate (8), and nut (7) from center port (9) of extension cylinder (3). Discard locking plate (8).
2. Remove elbow (5) and pipe nipple (4) from retraction port (1) of extension cylinder (3).
3. Attach chain to end of boom (10) and lifting device.

NOTE

Two assistants will help with steps 4 through 7.

4. Walk boom (10) halfway out of shipper (2). Raise or lower lifting device to prevent binding.
5. Support end of boom (10) with jack stand, and remove chain from boom (10) and lifting device.
6. Attach chain and spreader barb boom (10) and lifting device.

WARNING

- **All personnel must stand clear during lifting operations. A swinging or shifting load may cause injury to personnel.**
- **Ensure lifting capacity is greater than weight (2820 lb (1280 kg)) of boom. Failure to do so may result in injury to personnel or damage to equipment.**

7. **Continue to walk boom (10) out of shipper (2), set boom (10) on wood blocks, and remove chain and spreader bar from boom (10) and lifting device.**

d. Extension Cylinder Removal

1. **Remove four cotter pins (11) and two pins (13) from boom (10) and collar (12).**
2. **Attach chain to end of extension cylinder (3) and lifting device.**

NOTE

Two assistants will help with steps 3 through 6.

3. Walk extension cylinder (3) out of boom (10) a distance of two-thirds length of extension cylinder (3).

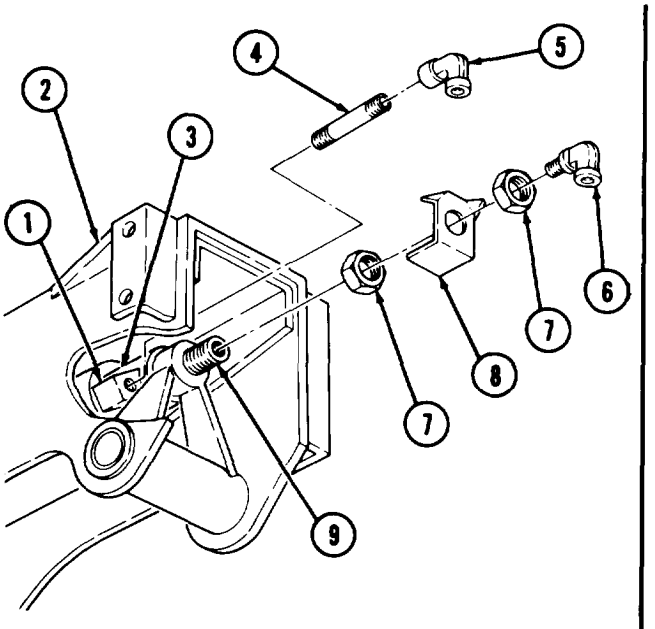

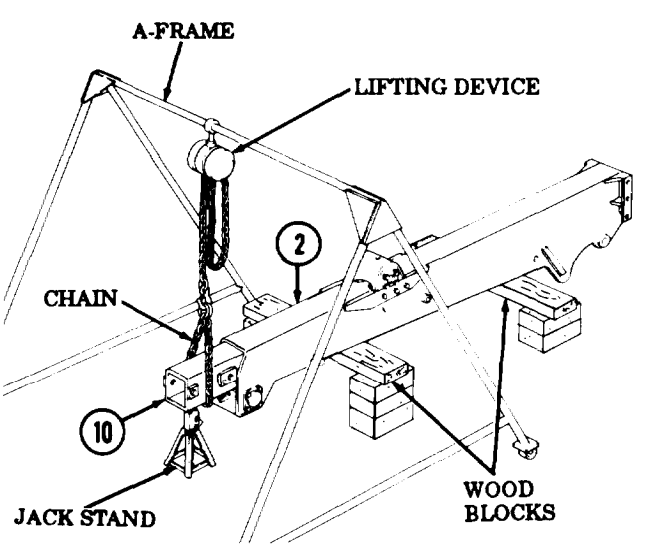

16-34. CRANE SHIPPER, BOOM, BOOM EXTENSION, AND ROLLERS MAINTENANCE (M819) (Cont'd)

4. Place jack stand near end of extension cylinder (3) and remove chain from extension cylinder (3) and lift,ing device.
5. Attach chain and spreader bar on extension cylinder (3) and lifting device.

WARNING

- All personnel must stand clear during lifting operations. A swinging or shifting load may cause injury to personnel.
- Ensure lifting capacity is greater than weight of extension cylinder. Failure to do so may result in injury to personnel or damage to equipment.

6. Continue walking extension cylinder (3) out of boom (10), set extension cylinder (3) on wood blocks, and remove chain and spreader bar from extension cylinder (3) and lifting device

e. Upper Roller Removal

Removal of upper roller maybe performed with crane shipper on-vehicle if boom is supported.

1. Remove six screws (16) and lockwashers (15) from roller housing (14) and shipper (2). Discard lockwashers (15).
2. Remove roller housing (14) from shipper (2).

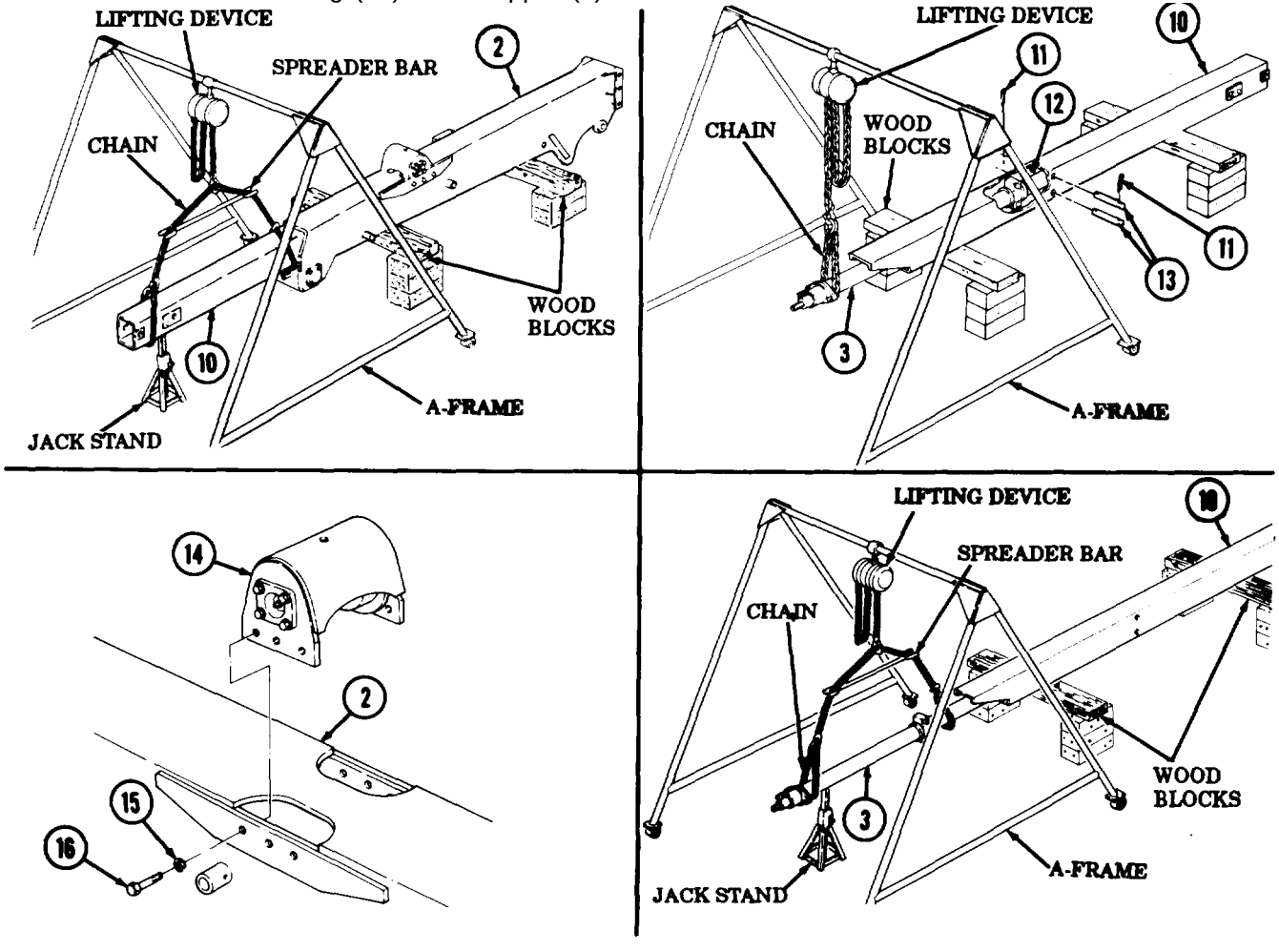

16-34. CRANE SHIPPER, BOOM, BOOM EXTENSION, AND ROLLERS MAINTENANCE (M819) (Cont'd)

f. Boom Extension Disassembly

1. Remove grease fitting (9) from end of shaft (8).
2. Remove screw (7) from plate on shaft (8) and boom extension (10).
3. Remove shaft (8), two sheaves (2), and four sheave washers(1) from boom extension (10).
4. Remove two linch pins (5) from cable anchor pin (6).
5. Drive out cable anchor pin (6) from boom extension (10).
6. Remove two screws (4), chains (3), and linch pins (5) from boom extension (10).

g. Front Lower Roller Disassembly

NOTE

This procedure may be performed on-vehicle if boom is supported or removed. Refer to subtask n. for assembly and adjustment procedure.

1. Remove two grease fittings (19) from covers (16).
2. Remove eight screws (18), lockwashers (17), two caps (16), and shims (15) from shipper (14), Measure total thickness of shims (15) for each side and record value. Discard shims (15) and lockwashers (17).
3. Using mechanical puller, remove two bearings (20) and collars (11) from roller (13).

NOTE

Measure and record thickness of shims for installation.

4. Remove roller (13) and two sets of shims (12) from shipper (14). Discard shims (12).

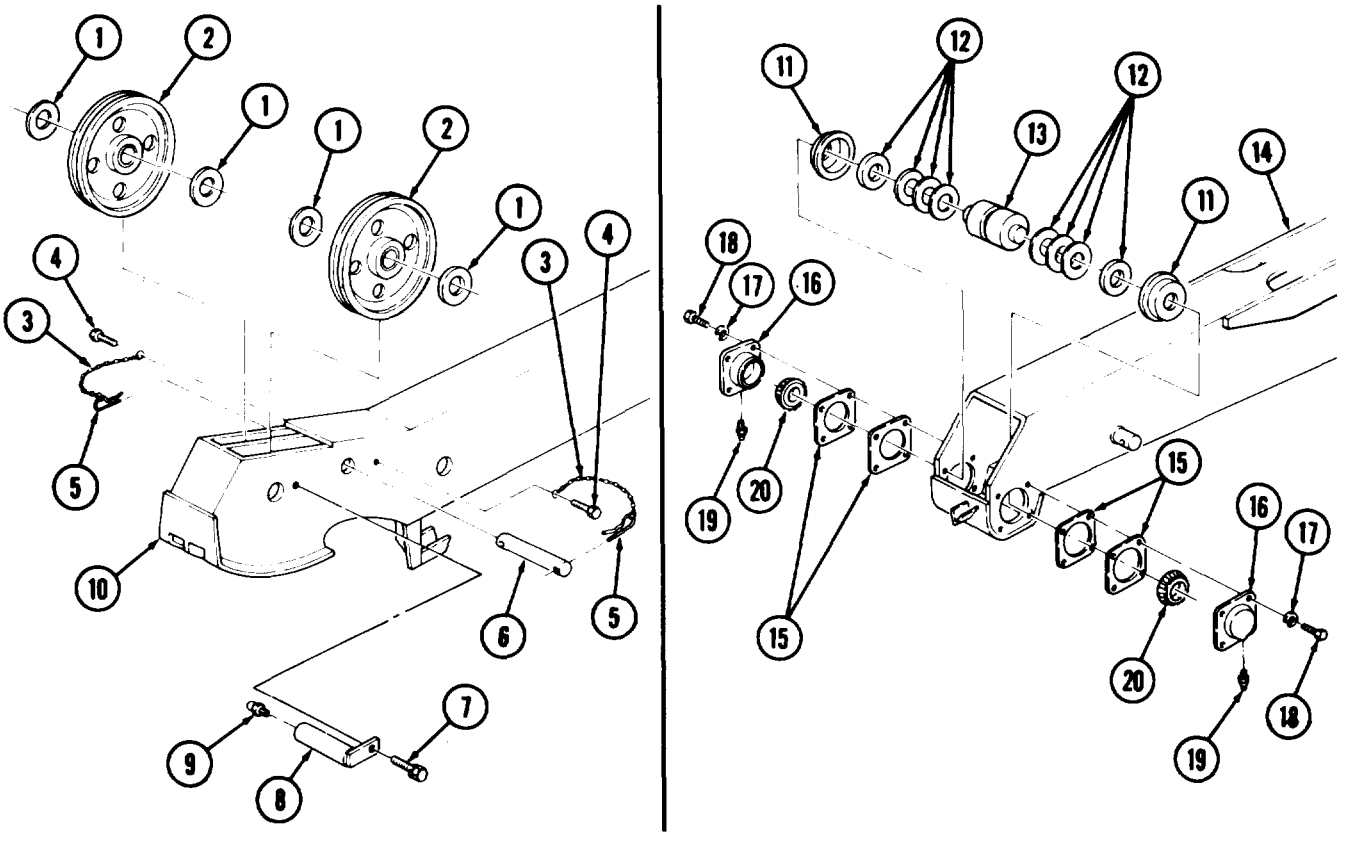

16-34. CRANE SHIPPER, BOOM, BOOM EXTENSION, AND ROLLERS MAINTENANCE (M819) (Contd)

h. Middle Lower Roller Disassembly

NOTE

- This procedure can be performed on-vehicle by rocking boom toward upper roller. Weigh down end of boom.
- Mark holes on plate and shipper from which screw is removed.

1. Remove screw (21) and lockwasher (22) from plate (23) on roller shaft (25) and shipper (14). Discard lockwasher (22).

NOTE

Assistant will help with step 2.

2, Remove roller shaft (25) and roller (24) from shipper (14).
3. Remove grease fitting (26) from roller shaft (25).

I. Upper Roller Disassembly

NOTE

Upper roller assembly must be removed from shipper (subtask e.) before disassembly,

1. Remove two grease fittings (35) from caps (27).
2. Remove eight screws (34), lockwashers (33), two caps (27), and shims (28) from housing (29). Discard shims (28) and lockwashers (33).
3. Remove two rollers (30) and shaft (32) from housing (29).
4. Remove two rollers (30) and spacer plates (31) from shaft (32).

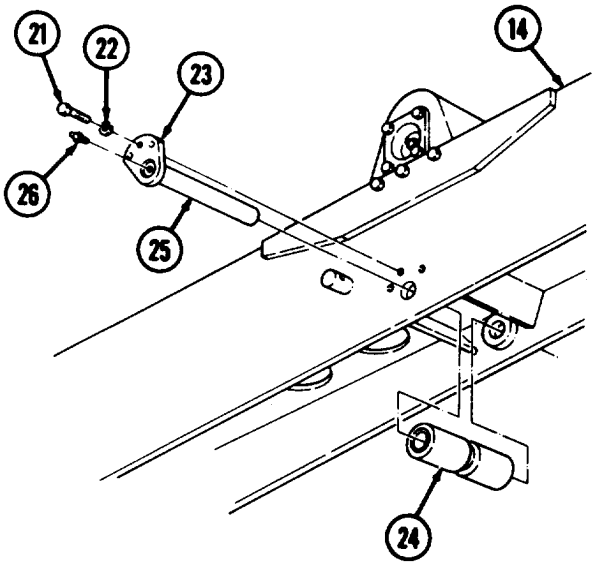

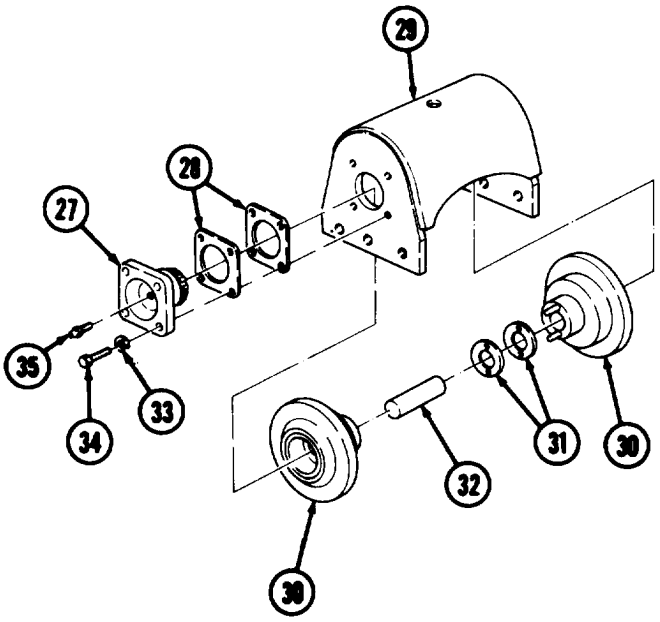

16-34. CRANE SHIPPER, BOOM, BOOM EXTENSION, AND ROLLERS MAINTENANCE (M819) (Contd)

j. Cleaning and Inspection

1. For general cleaning instructions refer to para. 2-8.
2. For general inspection instructions, refer to para. 2-9.
3. Inspect shipper (1) for bends, cracks, broken welds, stripped or damaged threads, and loose, broken, and damaged pins (4) and (8). Repair if damaged (subtask k.).
4. Inspect bushings (3) on shipper (1) for nicks, burrs, and wear (egg shaped when pivot pin (2) is inserted in bushings (3)). Replace bushings (3) if worn or damaged.
5. Inspect boom (7) for bends, cracks, and broken welds. Repair if damaged (subtask k.).
6. Inspect boom extension (14) for bends, cracks, and damaged threads. Repair if damaged (subtask k.).
7. Inspect sheaves (11) for cracks, broken cable groove edges, and worn or scored bushings (10). Replace bushings (10) if damaged or worn.
8. Inspect thrust washers (9) for breaks, grooves, or scoring. Replace thrust washers (9) if damaged.
9. Inspect pins (2), (5), (12), and (13) for bends or breaks. Replace pins (2), (5), (12), and (13) if bent or broken.
10. Inspect and repair extension cylinder (6) (para. 16-34).
11. Inspect roller (27) for cracks and damaged bushings (26). Replace bushings (26) if damaged.
12. Inspect roller (24) and collars (23) for breaks, cracks, and evidence of spun bearings (30). Replace bearings (30), races (29), and collars (23) if damaged.
13. Inspect bearings (16) and mating races (18) for damage. Replace damaged bearings (16) and races (18) as sets.
14. Inspect rollers (19) for breaks, cracks, and bent or broken dowel pins (20). Replace damaged dowel pins (20).
15. Inspect two spacer plates (21) for cracks and corrosion. Replace spacer plates (21) if cracked or corroded.
16. Inspect pin (25) for bends, cracks, and loose or broken plate. Replace pin (25) if damaged.
17. Inspect shaft (22) and housing (17) for cracks, bends, and damaged threads. Repair if damaged (subtask k.).
18. Inspect two caps (15) and (28) for bends and cracks. Replace caps (15) and (28) if bent or cracked.

k. Repair

1. Repair damaged welds (TM 9-237) on shipper (l), boom (7), and boom extension (14).
2. Using arbor press, replace defective bearings (16) and (30) and races (18) and (29) as a bearing and race set.
3. Replace bushings (3), (10), and (26) if defective.
4. Repair damaged threads (para. 2-10).
5. Replace all other parts if defective.
6. Minor scoring, nicks, or burrs may be repaired using soft stone or crocus cloth.

16-34. CRANE SHIPPER, BOOM, BOOM EXTENSION, AND ROLLERS MAINTENANCE (M819) (Contd)

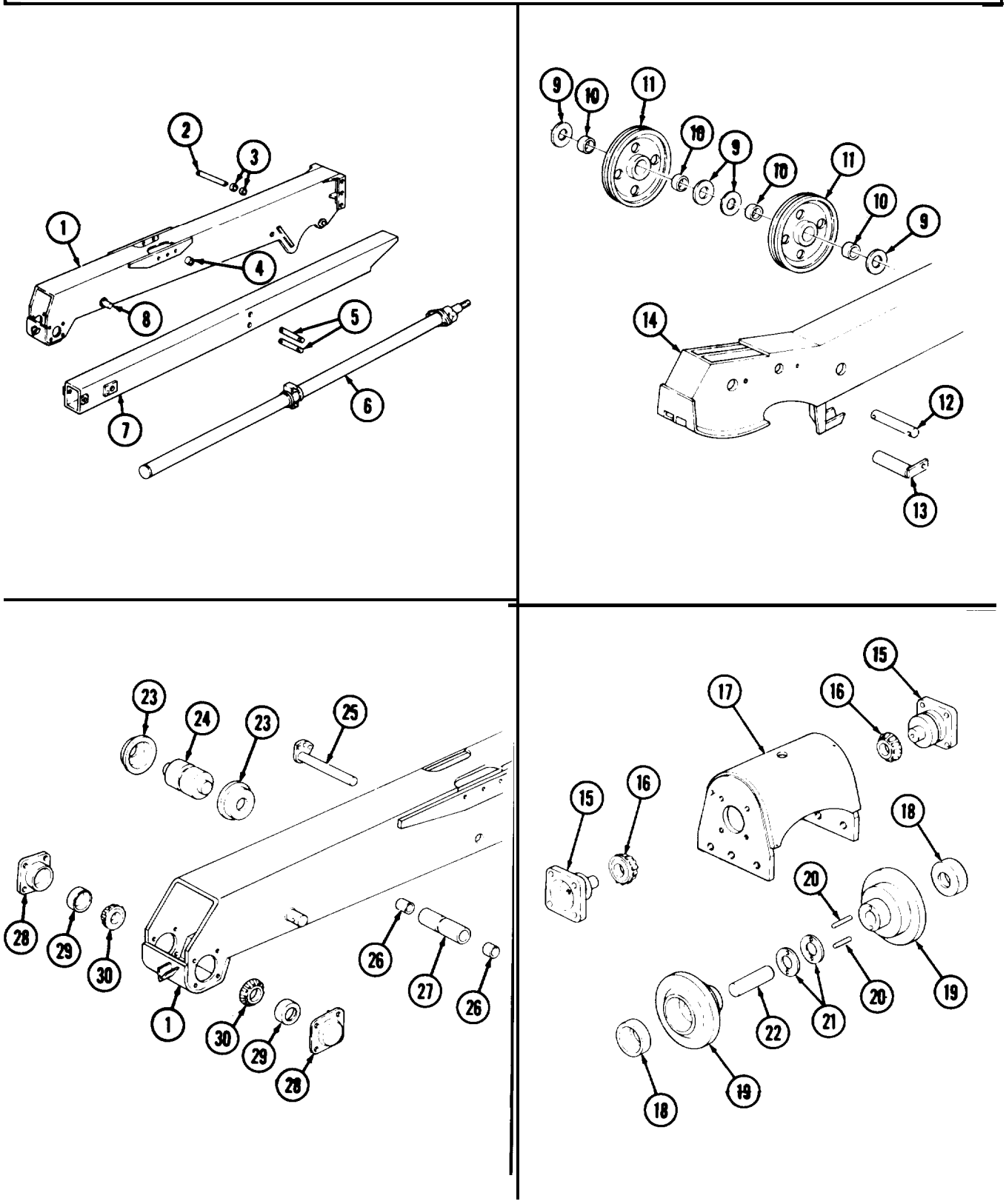

16-34. CRANE SHIPPER, BOOM, BOOM EXTENSION, AND ROLLERS MAINTENANCE (M819) (Contd)

L Upper Roller Assembly and Adjustment

1. Place two spacer plates (9) on dowel pins (8) and, with holes in opposite roller (7) alined with dowel pins (8), push rollers (7) together.
2. Install shaft (10) on two rollers (7).

NOTE

Assistant will help with steps 3, 5 ,7, and 8.

3. With rollers (7) and shaft (10) positioned in housing (3), install two caps (1) on housing (3) with eight screws (5). Do not tighten screws (5).
4. Tighten screws (5) on one side of housing (3) so that cap (1) is fully seated against housing (3).
5. While turning rollers (7), evenly tighten four screws (5) on other side of housing (3) until a slight drag is felt on rollers (7).
6. Using feeler gage, measure gap (11) and assemble two sets of new shims (2), each being equal in thickness to one-half the measured thickness of gap (11).
7. Remove eight screws (5) and two caps (1) from housing (3).
8. With rollers (7) and shaft (10) positioned in housing (3), install required number of new shims (2) and two caps (1) on housing (3) with eight new lockwashers (4) and screws (5).
9. Measure distances “A” and “B” between flange of rollers (7) and inside of housing (3). Record measurements. Distances “A” and “B” are correct if measurements are the same.

NOTE

If the distances “A” and “B” do not measure the same, perform steps 10 through 13 to center rollers in housing.

10. Remove eight screws (5) and lockwashere (4) from caps (1) and housing (3).
11. Remove cap (1) on side with longer distance measured, and remove shims (2) from cap (1) equal in thickness to one-half the difference of distances “A” and “B.”
12. Remove other cap (1) and place thickness of shims (2) removed in step 11 on cap (1).
13. Perform step 8.
14. Install two grease fittings (6) on caps (1).
15. Install upper roller assembly on shipper (subtask p.) if performing this task on-vehicle.

16-34. CRANE SHIPPER, BOOM, BOOM EXTENSION, AND ROLLERS MAINTENANCE (M819) (Contd)

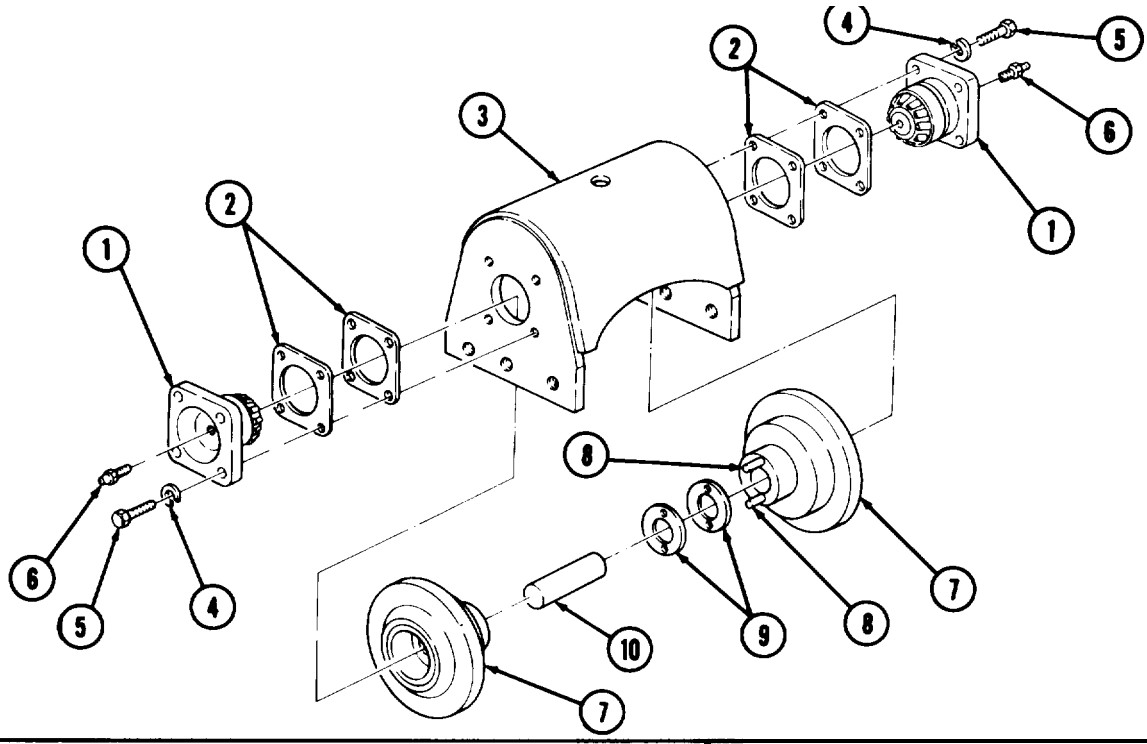

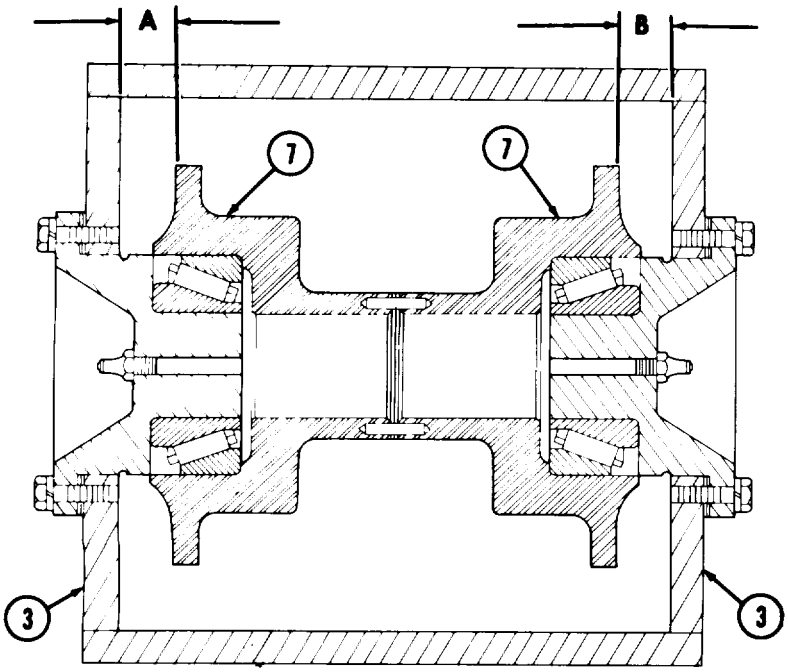

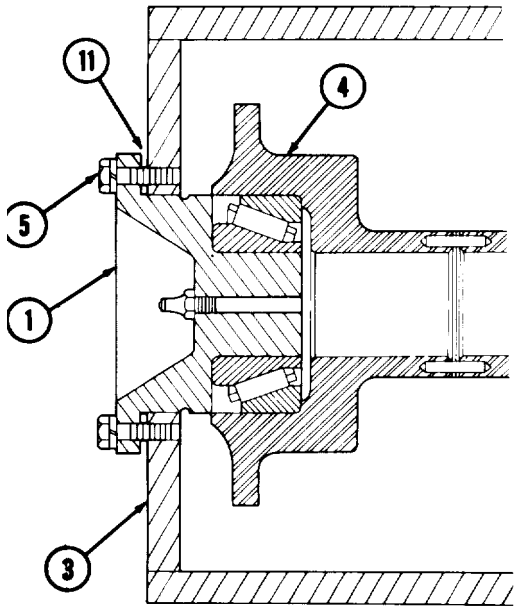

16-34. CRANE SHIPPER, BOOM, BOOM EXTENSION, AND ROLLERS MAINTENANCE (M819) (Contd)

m. Middle Lower Roller Assembly

NOTE

- This task may be performed on-vehicle if boom is held up to upper roller by extending and weighting down end of boom.
- Ensure lifting capacity is greater than weight of shipper. Failure to do so may result in injury to personnel or damage to equipment.
- Assistant will help with steps 1 and 2.

1. Hold roller (5) in shipper (4) and install shaft (6) on shipper (4) and roller (5).
2. Aline marked holes in plate of shaft (6) and shipper (4) and install shaft (6) on shipper (4) with new lockwasher (3) and screw (2).
3. Install grease fitting (1) on shaft (6).

n. Front Lower Roller Assembly and Adjustment

NOTE

- This task may be performed on-vehicle if boom is supported or removed from shipper. There is not a height adjustment for front lower roller.
- All personnel must stand clear during lifting operations. A swinging or shifting load may cause injury to personnel.
- Ensure lifting capacity is greater than weight of shipper. Failure to do so may result in injury to personnel or damage to equipment.

1. Using recorded measurement, assemble two sets of new shims (5) and place shims (5) on roller (6).
2. Using arbor press, press two collars (4) and bearings (8) on roller (6).

NOTE

Assistant will help with steps 3,5, 7, and 8.

3 With roller (6) positioned in shipper (10), install two caps (3) on shipper (10) with eight screws (1). Do not tighten screws (1)
4. Tighten screws (1) on one side of shipper (10) so that cap (3) is fully seated against shipper (10).
5. While turning roller (6), evenly tighten four screws (1) on other side of shipper (10) until a slight drag is felt on roller (6).

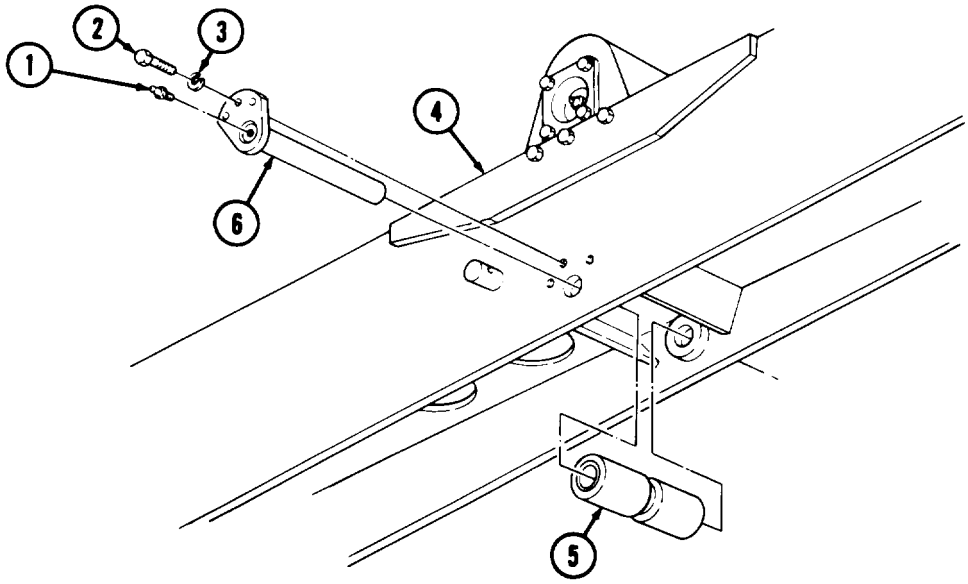

16-34. CRANE SHIPPER, BOOM, BOOM EXTENSION, AND ROLLERS MAINTENANCE (M819) (Contd)

6. Using feeler gage, measure gap (11) and assemble two sets of new shims (9), each being equal in thickness to one-half the measured thickness of gap (11).
7. Remove eight screws (1) and two caps (3) from shipper (10).
8. With roller (6) positioned in shipper (10), install required number of new shims (9) and two caps (3) on shipper (10) with eight new lockwashers (2) and screws (1).
9. Measure distances "A" and "B" between flange of collars (4) and inside of shipper (10). Record measurements. Distances "A" and "B" are correct if measurements are the same.

NOTE

If distances "A" and "B" do not measure the same, perform steps 10 through 13 to center roller in shipper.

10. Remove eight screws (1) and lockwashers (2) from caps (3) and shipper (10).
11. Remove cap (3) on side with longer distance measured, and remove shims (9) from cap (3) equal in thickness to one-half the difference of distances "A" and "B."
12. Remove other cap (3) and place required number of shims (9) removed in step 11 on cap (3).
13. Perform step 8.
14. Install two grease fittings (7) on caps (3).

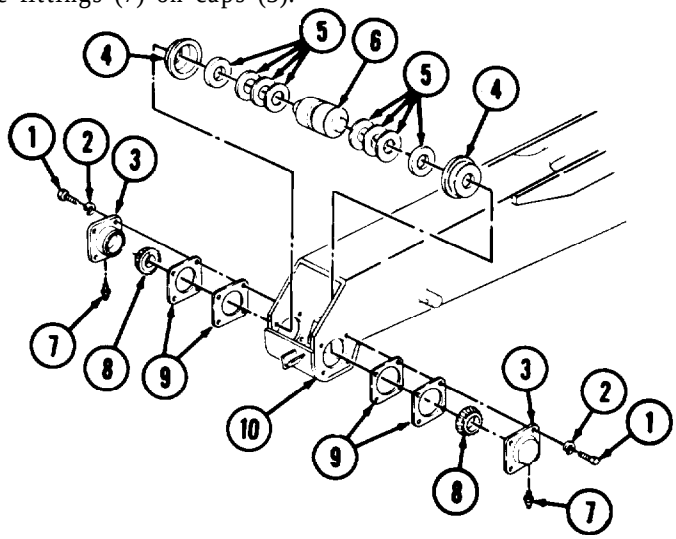

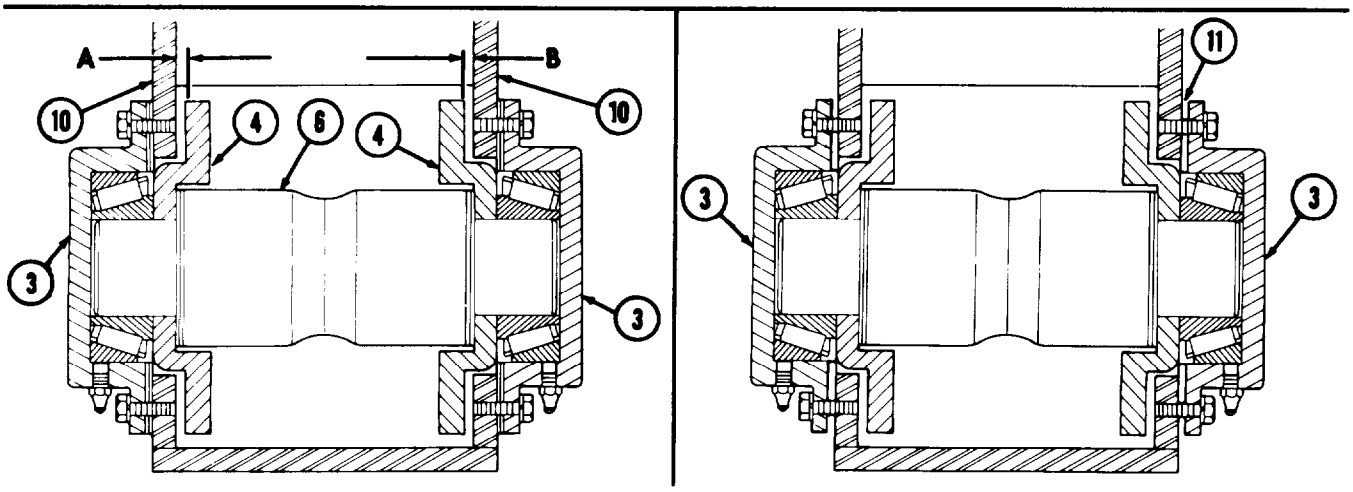

16-34. CRANE SHIPPER, BOOM, BOOM EXTENSION, AND ROLLERS MAINTENANCE (M819) (Contd)

o. Boom Extension Assembly

1. Install two chains (4) and linch pins (5) on boom extension (10) with two screws (3).
2. Install anchor pin (6) on boom extension (10) with two linch pins (5).

NOTE

Assistant will help with step 3.

3. Install four thrust washers (1) and two sheaves (2) on boom extension (10) with pin (8) and screw (7).
4. Install grease fitting (9) on pin (8).

p. Upper Roller Installation

NOTE

This procedure may be performed on-vehicle. Adjust lower roller to lowest position. Adjust lower roller after installation. Refer to TM 9-2320-260-20 for lower roller adjustment.

1. Install upper roller housing (11) on shipper (12) with six new lockwashers (14) and screws (13).
2. Adjust lower middle roller after boom is installed (TM-9-2320-260-20).

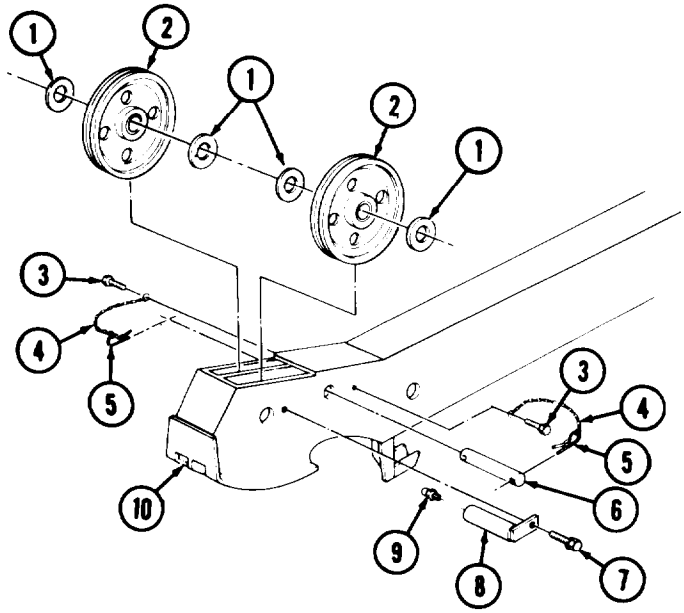

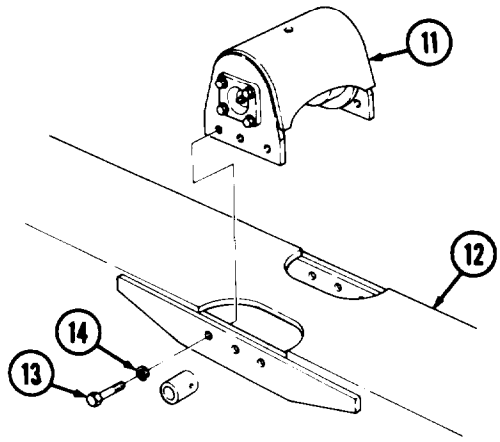

16-34. CRANE SHIPPER, BOOM, BOOM EXTENSION, AND ROLLERS MAINTENANCE (M819) (Contd)

q. Extension Cylinder Installation

1. Attach chain and spreader bar to extension cylinder (16) and lifting device.

WARNING

Ž All personnel must stand clear during lifting operations. A swinging or shifting load may cause injury or death to personnel.

• Ensure lifting capacity is greater than weight of extension cylinder. Failure to do so may result in injury to personnel or damage to equipment.

NOTE

Two assistants will help with steps 2 through 4.

2. Using A-frame, aline front of extension cylinder (16) to boom (15) and walk extension cylinder (16) into boom (15). Raise or lower lifting device as necessary to prevent extension cylinder (16) from binding in boom (15).
3. When chain is near boom (15), support end of extension cylinder (16) with jack stand, remove spreader bar, and connect chain to end of extension cylinder (16).
4. With holes in collar (18) alined with holes in boom (15), walk extension cylinder (16) into boom (15) and install two pins (19) on boom (15) and collar (18) with four new cotter pins (17).
5. Remove chain from extension cylinder (16) and lifting device.

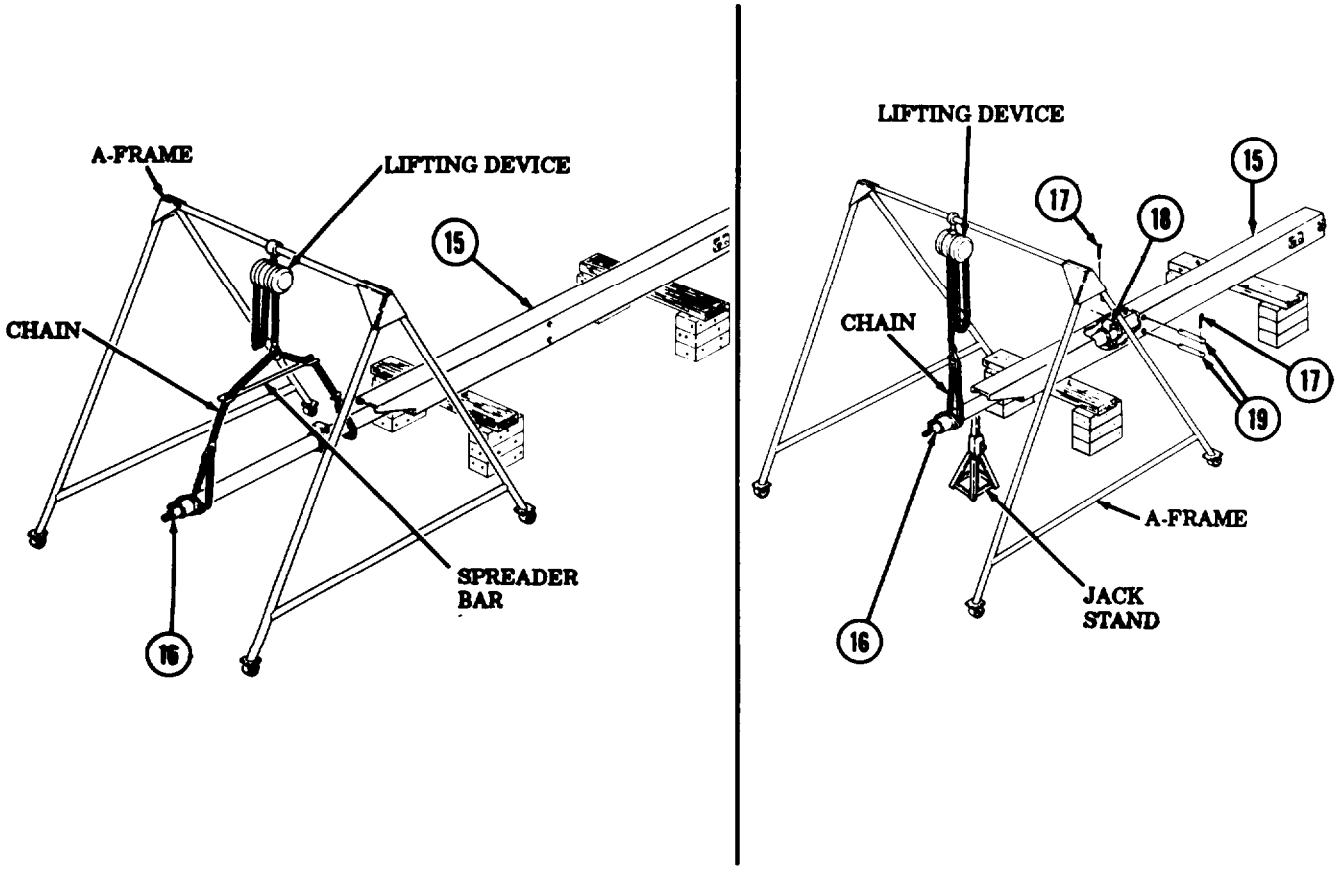

16-34. CRANE SHIPPER, BOOM, BOOM EXTENSION, AND ROLLERS MAINTENANCE (M819) (Contd)

r. Boom Installation

1. Attach chain and spreader bar to boom (12) and lifting device.

WARNING

- All personnel must stand clear during lifting operations. A swinging or shifting load may cause injury or death to personnel.
- Ensure lifting capacity is greater than weight (2820 lb (1280 kg)) of boom. Failure to do so may result in injury to personnel or damage to equipment.

NOTE

Two assistants will help with steps 2 through 5.

2. Aline retraction port (11) of extension cylinder (2) to upper left side of boom (12).
3. Using A-frame, aline boom (12) to shipper (1) and walk boom (12) into shipper (1). Use lifting device to raise or lower boom (12) to prevent binding between boom (12) and shipper (1).
4. When chain is near shipper (1), support end of boom (12) with jack stand, remove chain and spreader bar, and attach chain to end of boom (12).
5. Continue to walk boom (12) into shipper (l). Ensure retraction port (11) is to upper left of anchor (10) on shipper (1) and center port (9) passes through anchor (10). Seat extension cylinder (2) on anchor (10).
6. Install nut (8), new locking plate (7), and nut (6) on center port (9) of extension cylinder (2). Bend tab of locking plate (7) over flat on nut (6).
7. Wrap male threads of pipe nipple (3) and elbows (4) and (5) with antiseize tape.
8. Install pipe nipple (3) and elbow (4) an retraction port (11). End of elbow (4) must point down.
9. Install elbow (5) on center port (9). End of elbow (5) must point down.
10. Remove chain from boom (12) and lifting device.

s. Boom Extension Installation

1. Attach chain and spreader bar to boom extension (15) and lifting device.

WARNING

- All personnel must stand clear during lifting operations. A swinging or shifting load may cause injury or death to personnel.
- Ensure lifting capacity is greater than weight of boom extension. Failure to do so may result in injury to personnel or damage to equipment.

NOTE

Two assistants will help with steps 2 through 5.

2. Using A-frame, aline end of boom extension (15) with boom (12), and walk boom extension (15) into boom (12). Use lifting device to raise or lower boom extension (15) to prevent binding between boom (12) and boom extension (15).
3. When chain is near boom (12), support end of boom extension (15) with jack stand and remove chain and spreader bar from boom extension (15).
4. Attach chain to end of boom extension (15) and continue to walk boom extension (15) into boom (12).
5. Aline holes in boom (12) and boom extension (15), and install two locking pins (13) on boom (12) and boom extension (15) with two linch pins (14).
6. Remove chain from boom extension (15) and lifting device.

16-34. CRANE SHIPPER, BOOM, BOOM EXTENSION, AND ROLLERS MAINTENANCE (M819) (Contd)

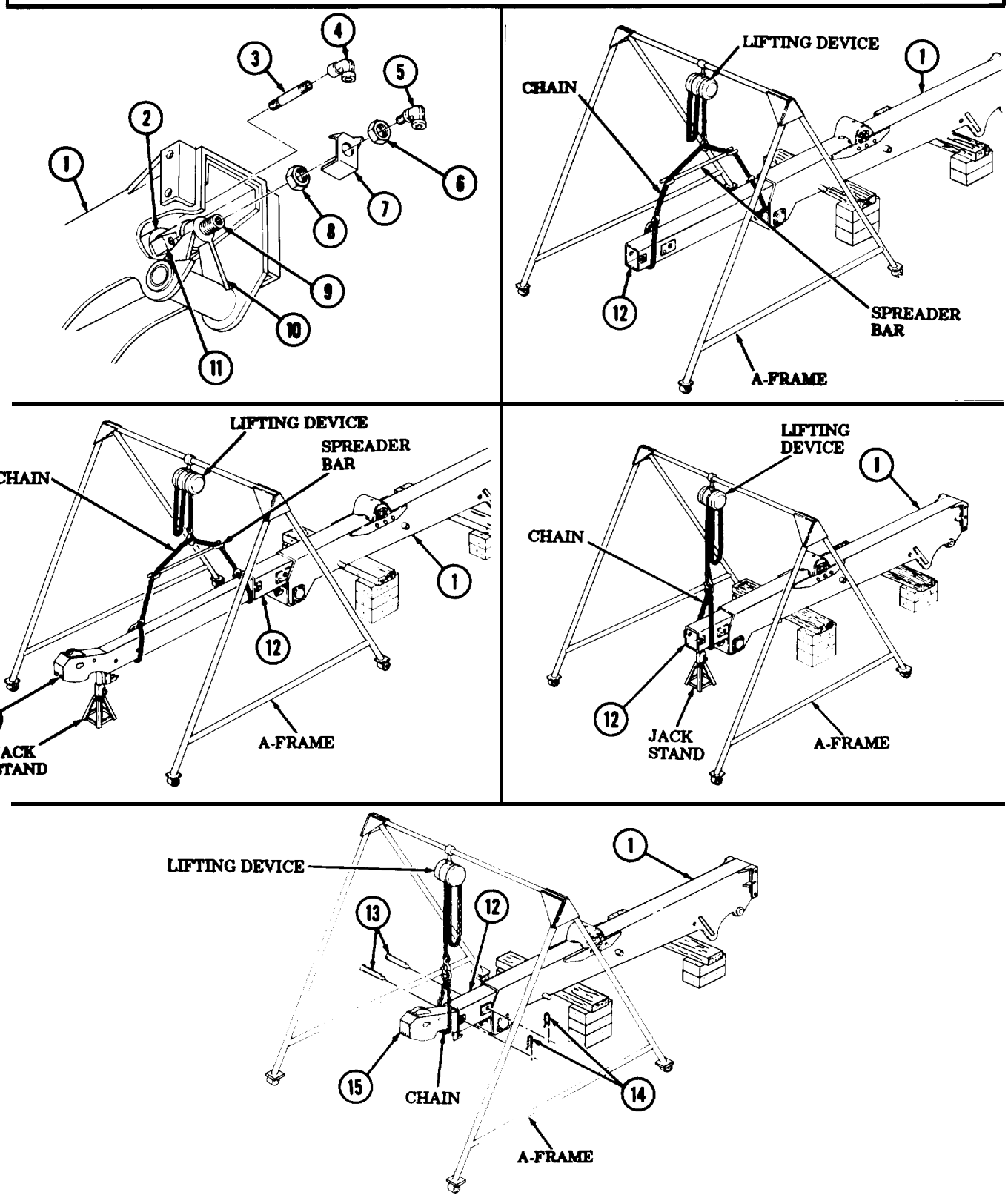

16-34. CRANE SHIPPER, BOOM, BOOM EXTENSION, AND ROLLERS MAINTENANCE (M819) (Contd)

t. Shipper Installation

1. Attach chain with spreader bar to boom extension (1) and shipper (2) to hold boom extension (1) and shipper (2) together during installation.
2. Attach chain to lifting device.

WARNING

- All personnel must stand clear during lifting operations. A swinging or shifting load may cause injury to personnel.
- Ensure lifting capacity is greater than weight of shipper. Failure to do so may result in injury to personnel or damage to equipment.

NOTE

Two assistance will help with steps 3 through 10.

3. Attach two guide lines to shipper (2), and boom extension (1) and lift shipper (2) over boom support (3) on vehicle.
4. Aline pivot pin holes on shipper (2) and boom support (3), and install shipper (2) on boom support (3) with pivot pin (9).
5. Install screw (6) and nut (5) on trunnion (7) and pivot pin (9).
6. Connect shipper braces (4) to shipper (2) (refer to TM 9-2320-260-10), remove chain and spreader bar from shipper (2), and attach chain to end of shipper (2).
7. Disconnect shipper braces (4) from shipper (2) (refer to TM 9-2320-260-10), and lift end of shipper (2) to height sufficient to connect lift cylinder trunnion (11) to shipper (2).
8. Move lift cylinder trunnion (11) to aline with shipper trunnions (10).
9. With holes in lift cylinder trunnion (11) and shipper trunnions (10) alined, install pivot pin (12) on cylinder trunnion (11) and shipper trunnions (10) with two screws (13) and nuts (14).
10. Lower shipper (2) to normal stowage height, and connect shipper braces (4) to shipper (2) (TM 9-2320-260-10).
11. Remove chain and two guide lines from shipper (2) and lifting device.
12. Wrap male threads on hoses (20) and (21) with antiseize tape.
13. Connect hoses (20) and (21) to elbows (18) and (19) and tubes (15) and (16). Tighten swivel nuts (17).
14. Install two grease fittings (8) on pivot pin (9).

16-34. CRANE SHIPPER, BOOM, BOOM EXTENSION, AND ROLLERS MAINTENANCE (M819) (Contd)

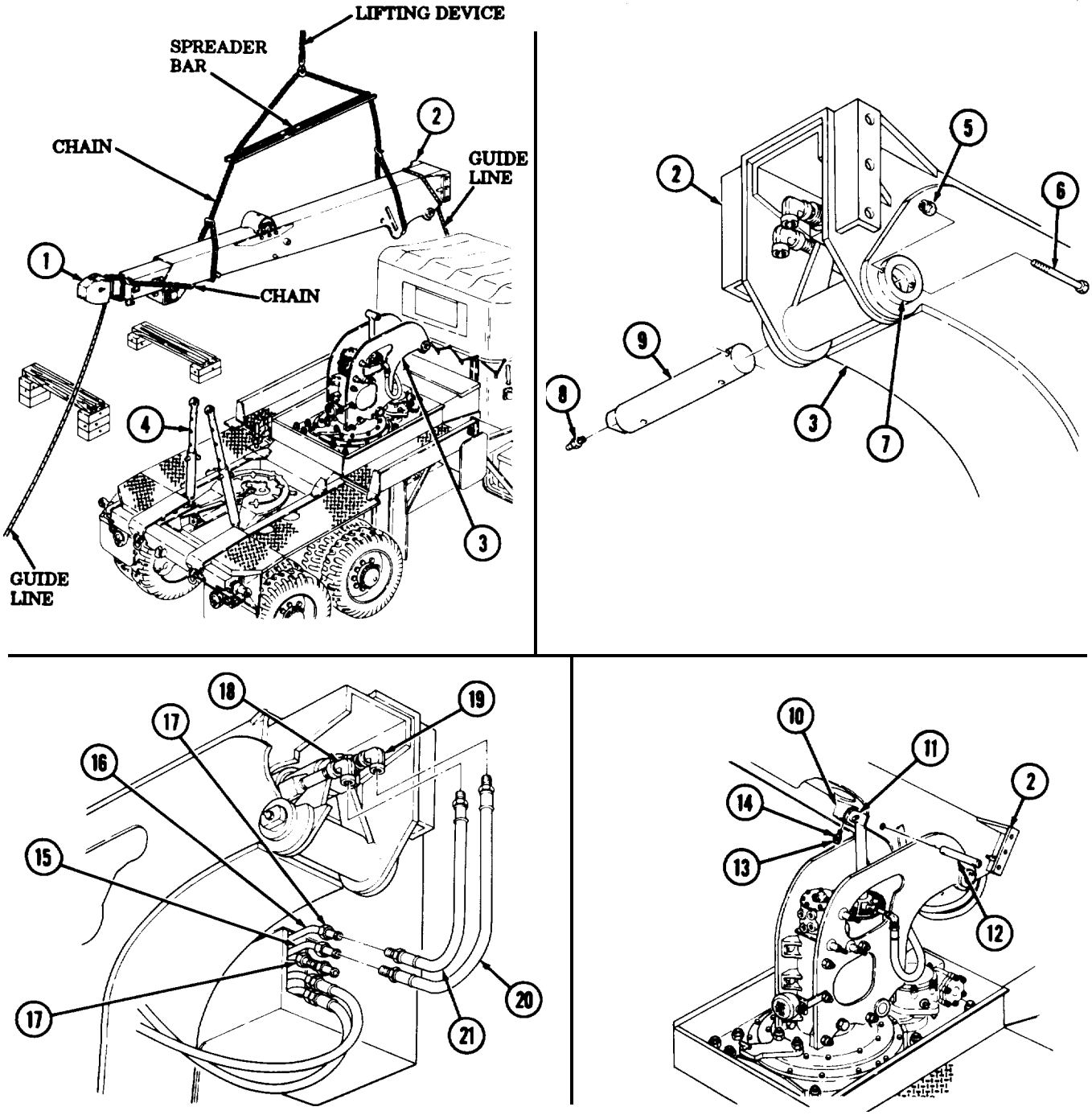

FOLLOW-ON TASKS:
- Install crane cab (gondola) (para. 16-29).
- Install floodlights and wiring harness (TM 9-2320-260-20).
- Install spare tire (TM 9-2320-260-10).
- Install cable hoist winch and hoses (para, 16-31).
- Upper and middle lower roller adjustment (TM 9-2320-260-20).
- Lubricate crane fittings (LO 9-2320-260-12).
- Check crane operation (TM 9-2320-260-10).

16-35. BOOM EXTENSION CYLINDER MAINTENANCE (M819)

THIS TASK COVERS:

a. Removal
b. Cleaning and Inspection
c. Repair
d. Assembly

INITIAL SETUP

APPLICABLE MODELS
M819

TOOLS
General mechanic's tool kit (Appendix B, Item 1)
Snapring pliers (Appendix B, Item **130)**

MATERIALS/PARTS
Four cotter pins (Appendix D, Item 17)
Two compression cups (Appendix D, Item 51)
O-ring (Appendix D, Item 268)
Wiper ring (Appendix D, Item 345)
Felt washer (Appendix D, Item 529)
O-ring (Appendix D, Item 269)
Hydraulic oil (Appendix C, Item 20)

PERSONNEL REQUIRED
Two

REFERENCES (TM)
LO 9-2320-260-12
TM 9-2320-260-10
TM 9-2320-260-20
TM 9-2320-260-34P-2

EQUIPMENT CONDITION
Crane boom removed (para. 16-34).

a. Disassembly

1. Remove four cotter pins (4) from slotted nuts (5). Discard cotter pins (4).
2. Remove four nuts (5) from studs (1) on cylinder flange (2).

NOTE

Assistant will help with steps 3 through 5.

3. Holding cylinder head (6), slide cylinder (3) off piston rod (13).
4. Remove two nuts (7), expander (8), compression cup (9), spacer (10), compression cup (11), and expander (12) from piston rod (13). Discard compression cups (11).
5. Remove cylinder head (6) from piston rod (13).
6. Remove O-ring (14) from outside of cylinder head (6). Discard O-ring (14).
7. Remove snapring (19), washer (18), wiper ring (17), felt washer (16), and O-ring (15) from bore of cylinder head (6). Discard wiper ring (17), felt washer (16), and O-ring (15).

b. Cleaning and Inspection

1. For general cleaning instructions, refer to para. 2-8.
2. For general inspection instructions, refer to para 2-9.
3. Inspect cylinder (3) for bends, cracks, and broken welds.
4. Inspect cylinder (3) bore for scratches, scoring, rust, and corrosion.
5. Inspect piston rod (13) for bends, nicks, scratches, scoring, damaged threads, rust, corrosion, and broken welds.
6. Inspect cylinder head (6) for cracks, broken snapring lip, rust, and corrosion.

16-35. BOOM EXTENSION CYLINDER MAINTENANCE (M819) (Contd)

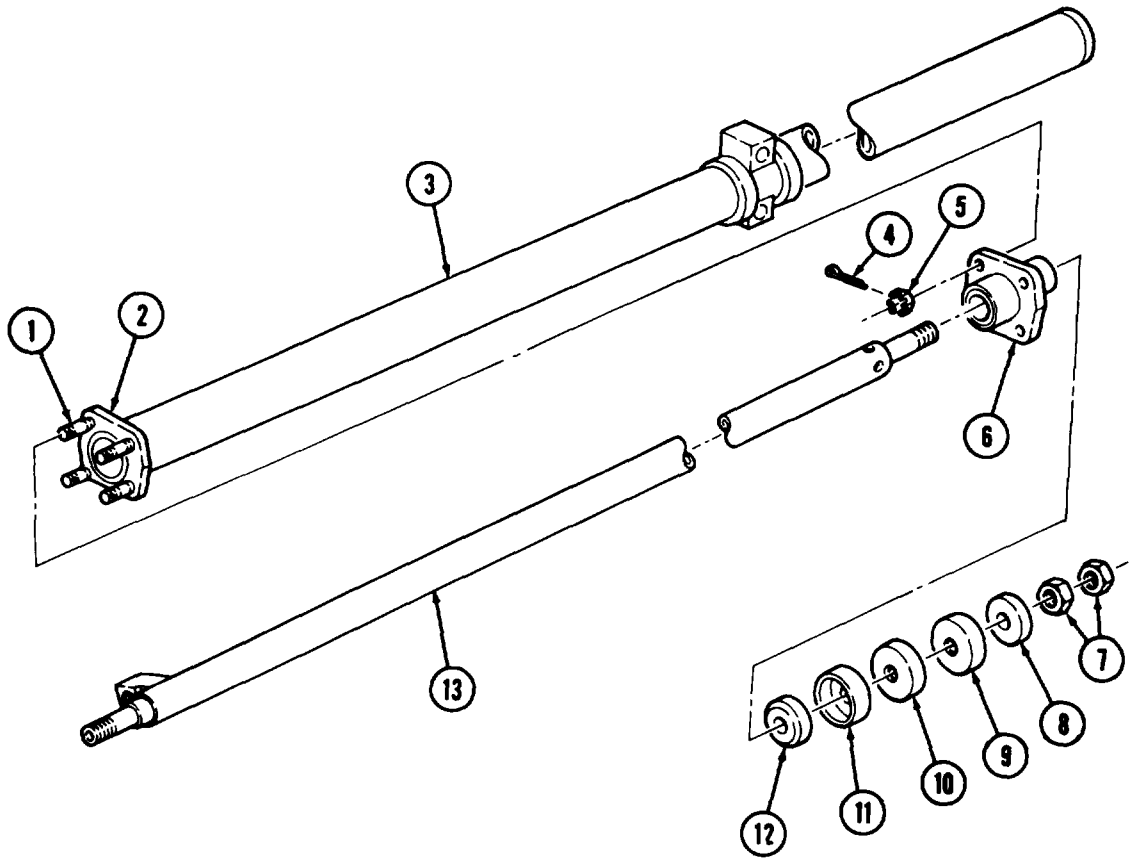

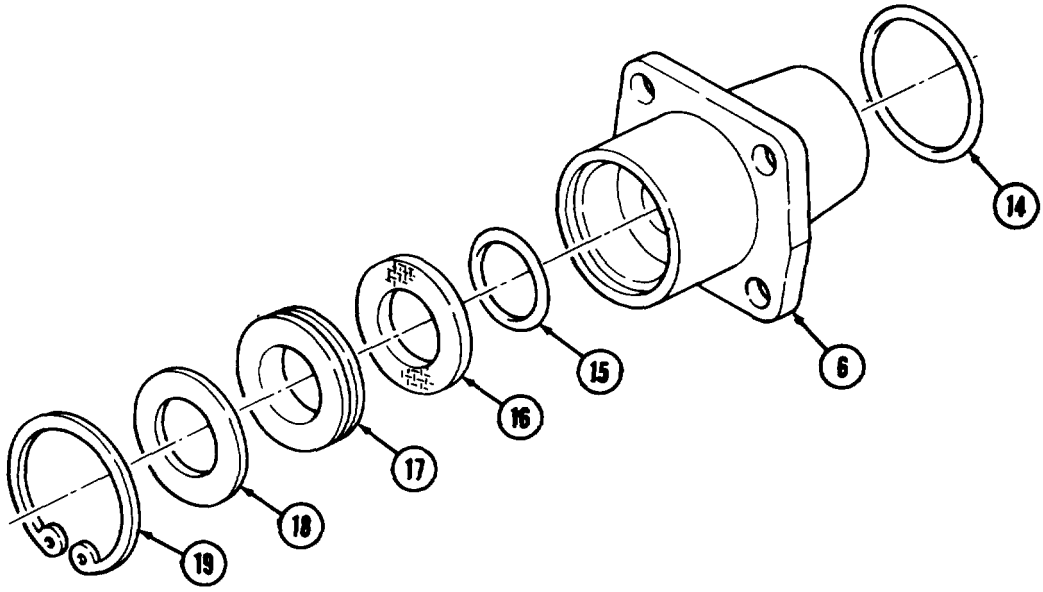

16-35. BOOM EXTENSION CYLINDER MAINTENANCE [M819) (Contd)

c. Repair

Repair cylinder (9), cylinder head (7), and piston rod (18) (para. 2-10). Replace unrepairable parts.

a. Remove minor rust and corrosion, scratches, and scoring with soft. stone or crocus cloth. Replace part if pitting is uncovered when rust or corrosion is removed. Replace parts if more severely damaged.

b. Repair broken or cracked welds and replace broken or damaged studs (8).

d. Assembly

1. Install new outer O-ring (6) and new inner O-ring (5) on cylinder head (7).
2. Position snapring (1), washer (2), new wiper ring (3), and new felt washer (4) on piston rod (18) and slide part way up piston rod (18).
3. Carefully work cylinder head (7) onto piston rod (18) and install new felt washer (4), and new wiper ring (3) on bore of cylinder head (7).
4. Slide washer (2) down piston rod (18) against wiper ring (3) and install snapring (1) on cylinder head (7).
5. Install expander (13), new compression cup (14), spacer (15), new compression cup (16) and expander (17) on piston rod (18) with two nuts (12).

NOTE

Ž Assistant will help with steps 6 and 7.

- Coat all internal surfaces and parts with hydraulic oil before assembly.

6. Carefully work cylinder (9) over compression cups (16) and slide cylinder (9) onto piston rod (18).
7. Aline studs (8) of cylinder (9) with holes in cylinder head (7) and install cylinder head (7) on cylinder (9) with four nuts (11) and new cotter pins (10).

16-35. BOOM EXTENSION CYLINDER MAINTENANCE (M819) (Contd)

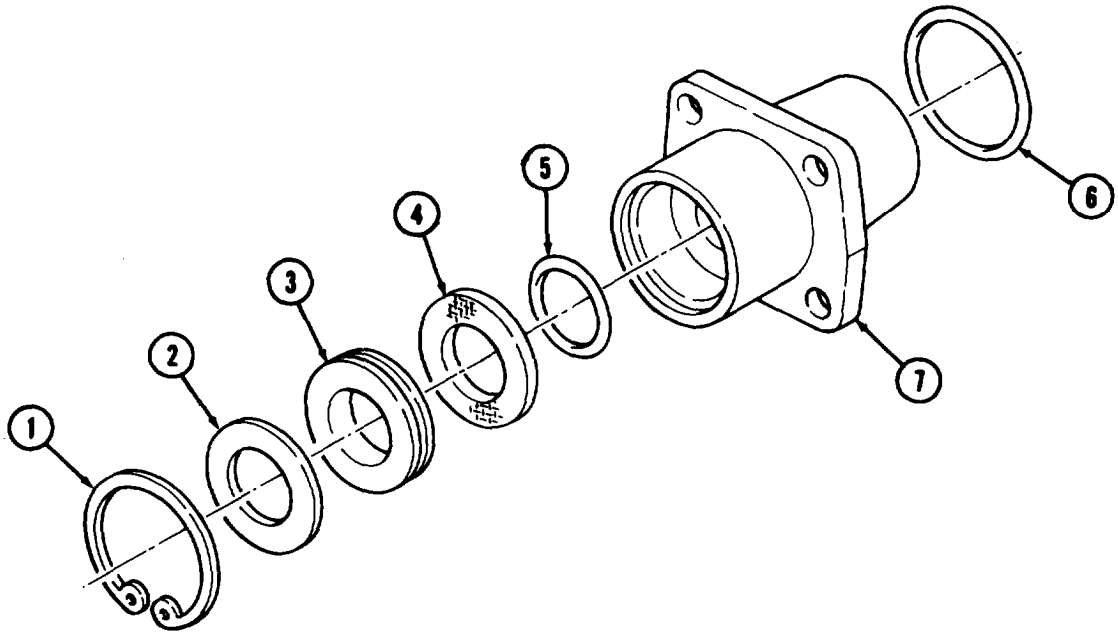

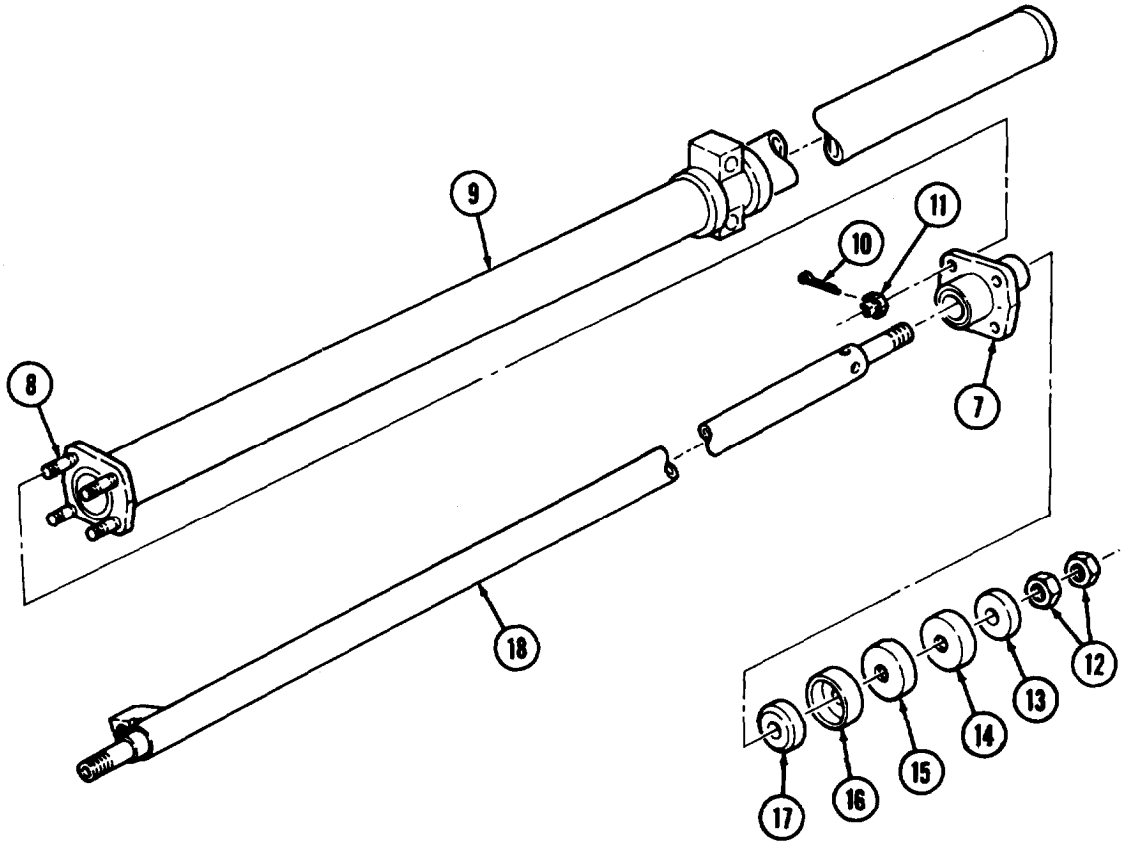

FOLLOW-ON TASKS: •Install crane voom (para. 16-34).
• Check crane operation (TM 9-2320-2260-10).

16-36. CONTROL VALVE BANK REPLACEMENT (M819)

THIS TASK COVERS:

a. Removal b. Installation

INITIAL SETUP

APPLICABLE MODELS

M819

TOOLS

General mechanic's tool kit (Appendix B, Item 1)
1-1/2-in. open-end wrench (Appendix B, Item 125)
1-5/8-in. open-end wrench (Appendix B, Item 126)
1-11/16-in. open-end wrench (Appendix B, Item 127)
Lifting device
Chain

MATERIALS/PARTS

Three locknuts (Appendix D, Item 192)
Antiseize tape (Appendix C, Item 50)
Cap and plug set (Appendix C, Item 6)

REFERENCES (TM)

LO 9-2320-260-12
TM 9-2320-260-10
TM 9-2320-260-20
TM 9-2320-260-34P-2

EQUIPMENT CONDITION

- Parking brake set (TM 9-2320-260-10).
- Hydraulic oil tank drained (LO 9-2320-260-12).
- Disconnect battery ground cable (TM 9-2320-260-20).

GENERAL SAFETY INSTRUCTIONS

- All personnel must stand clear during lifting operations.
- Ensure lifting capacity is greater than weight of control valve bank.

a. Removal

1. Remove screw (4) and wire (3) from windshield wiper motor (2).
2. Remove screw (8) and wiper arm (7) from shaft (6).
3. Remove slotted nut (10) and adapter (11) from shaft (6).
4. Remove two nuts (9), lockwasher (12), flat washer (13), and seal (14) from shaft (6).
5. Remove windshield wiper motor (2) from cab front panel (15).
6. Working inside cab, remove seven screws (1) and plate panel (23) from cab brackets (16).
7. Remove two nuts (19) and clamp (20) from studs (21) and tubes (5) on inside left wall of cab (22).

CAUTION

- Clean area around hoses and lines before removal to prevent entry of dirt. Damage will occur if dirt or dust enters system.
- Cap or plug all openings immediately after disconnecting lines and hoses to prevent contamination; Remove plugs prior-to installation. Failure to do so may result in damage to hydraulic system.

NOTE

- Have drainage container ready to catch oil.
- Tag hydraulic hoses and tubes for installation.

8. Disconnect seven tubes (5) and four hoses (18) from control valve bank (17).

16-36. CONTROL VALVE BANK REPLACEMENT (M819) (Contd)

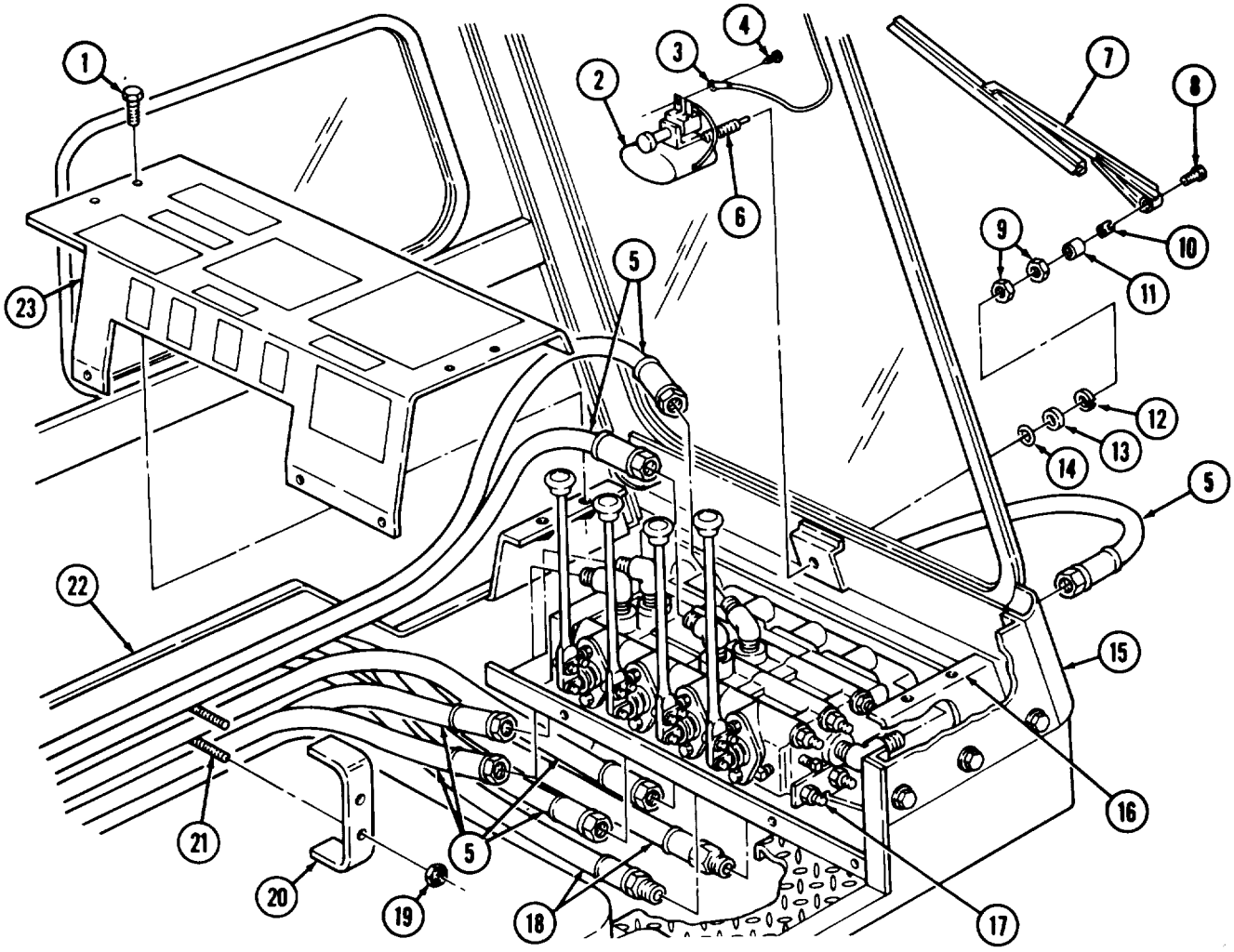

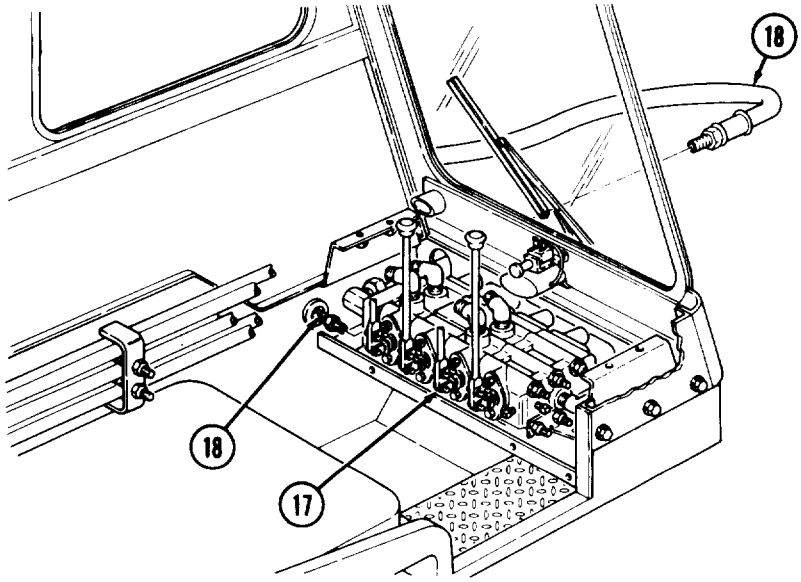

16-36. CONTROL VALVE BANK REPLACEMENT (M819) (Contd)

9. Remove three locknuts (4) and screws (1) from control valve bank (2) and bracket (5). Discard locknuts (4).
10 Attach chain to control valve bank (2) and lifting device.

WARNING

- All personnel must stand clear during lifting operations. A swinging or shifting load may cause injury to personnel.
- Ensure lifting capacity is greater than weight (165 lb (75 kg)) of control valve bank. Failure to do so may result in injury to personnel or damage to equipment.

NOTE

Assistant will help with step 11.

11. Remove control valve bank (2) from cab (3) and place in work area.
12. Remove chain from control valve bank (2) and lifting device.

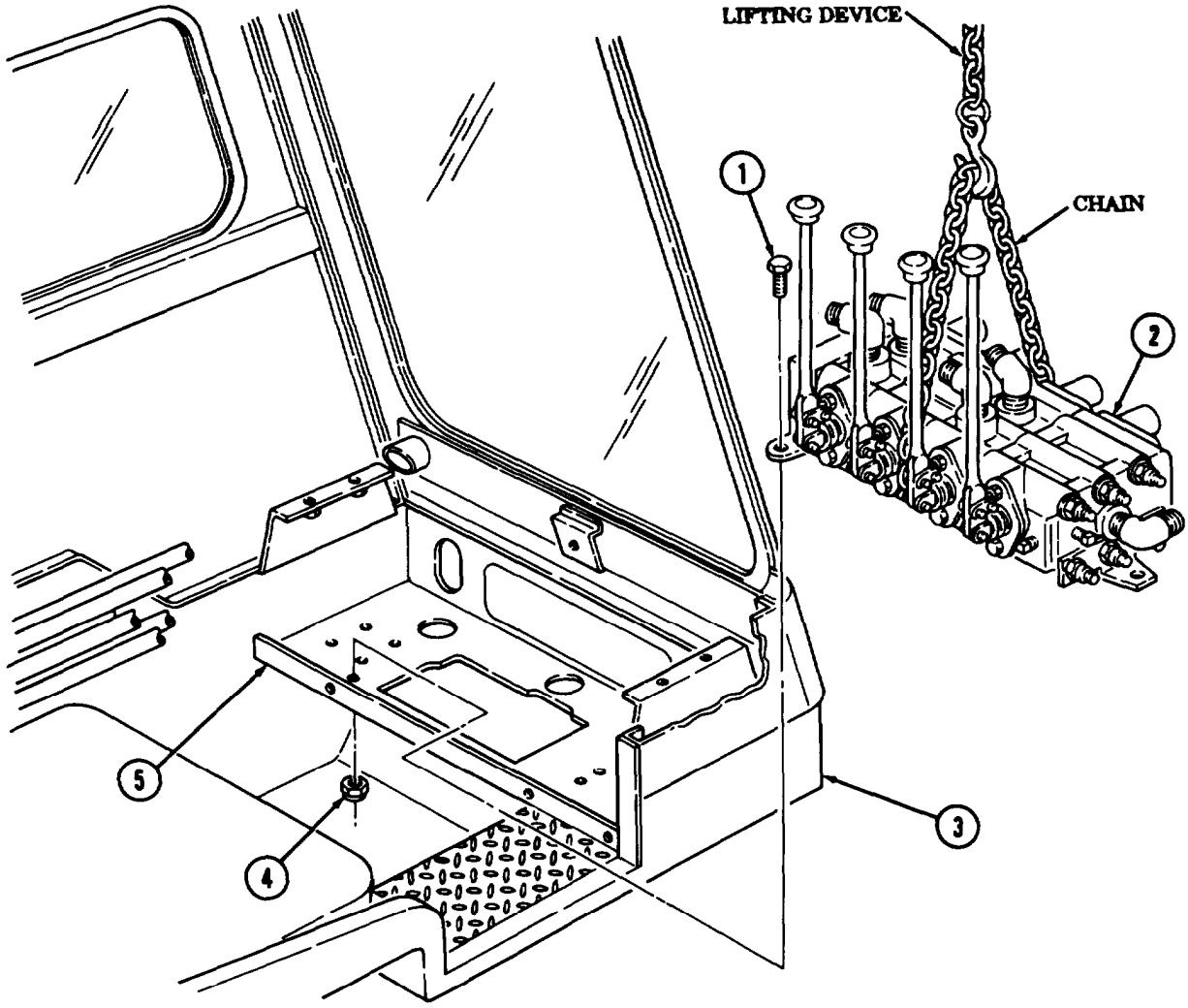

16-36. CONTROL VALVE BANK REPLACEMENT (M819) (Contd

NOTE

- Perform steps 13 and 14 if new control valve bank is to be installed.
- Tag elbows and adapter elbows for installation.
- Record angle positions of fittings for assembly.

13. Remove elbow (8) and adapter elbow (6) from control valve bank (2).
14. Remove six elbows (7) and two adapter elbows (9) from control valve bank (2).

b. Installation

NOTE

Perform steps 1, 2, and 3 for installation of new control valve bank.

1. Wrap male threads of six elbows (7), two adapter elbows (9), elbow (8), and adapter elbow (6) with antiseize tape.
2. Install six elbows (7) and two adapter elbows (9) on control valve bank (2) to angles previously recorded.

NOTE

Elbow and adapter elbow must point to rear of control valve bank when tightened.

3. Install elbow (8) and adapter elbow (6) on ends of control valve bank (2).

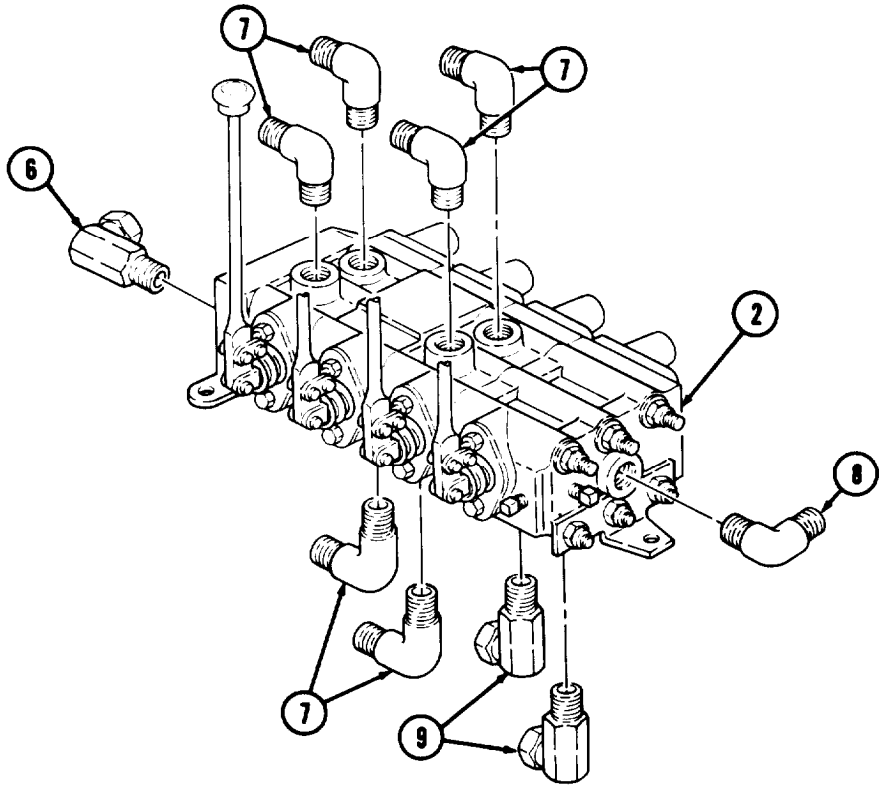

16-36. CONTROL VALVE BANK REPLACEMENT(M819) (Contd)

4. Attach chain to control valve bank (2) and lifting device.

WARNING

- All personnel must stand clear during lifting operations. A swinging or shifting load may cause injury to personnel.
- Ensure lifting capacity is greater than weight (165 lb (75 kg)) of control valve bank. Failure to do so may result in injury to personnel or damage to equipment.

NOTE

Assistant will help with step 5.

5. Move control valve bank (2) from work area and install on bracket (5) in cab (3) with three screws (1) and new locknuts (4).
6. Remove chain from control valve bank (2) and lifting device.
7. Wrap male threads on four hoses (6) with antiseize tape.
8. Connect seven tubes (12) and four hoses (6) to control valve bank (2).
9. Install clamp (24) on tubes (12) and studs (25) with two nuts (23).
10. Install plate panel (7) on brackets (26) with seven screws (8).
11. Position wiper motor (9) on front panel (7) and install with seal (22), washer (21), lockwasher (20), and two nuts (14) and (19).
12. Install adapter (18) and slotted nut (15) on shaft (13).
13. Install wiper arm (16) on shaft (13) with screw (17).
14. Connect wire (10) to wiper motor (9) with screw (11).

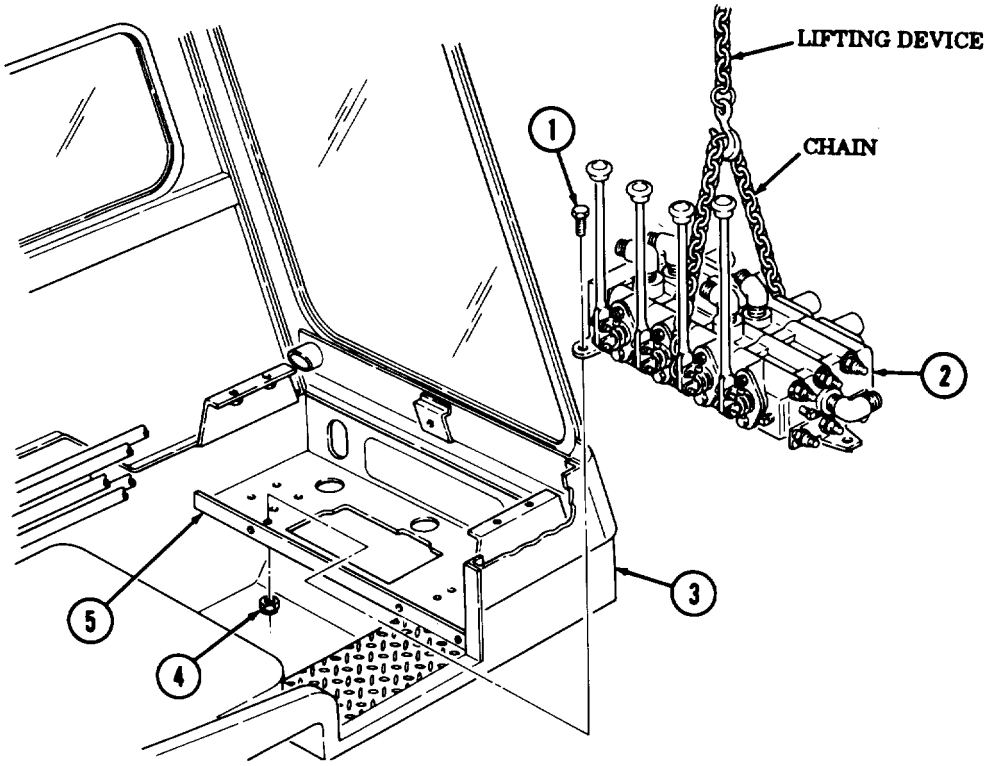

16-36. CONTROL VALVE BANK REPLACEMENT (M819) (Contd)

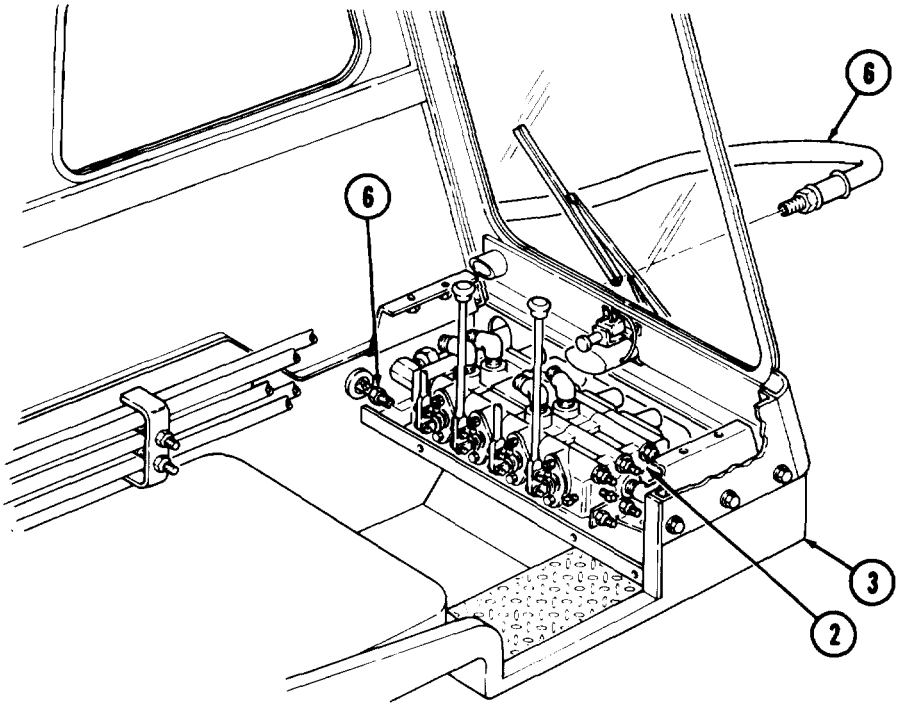

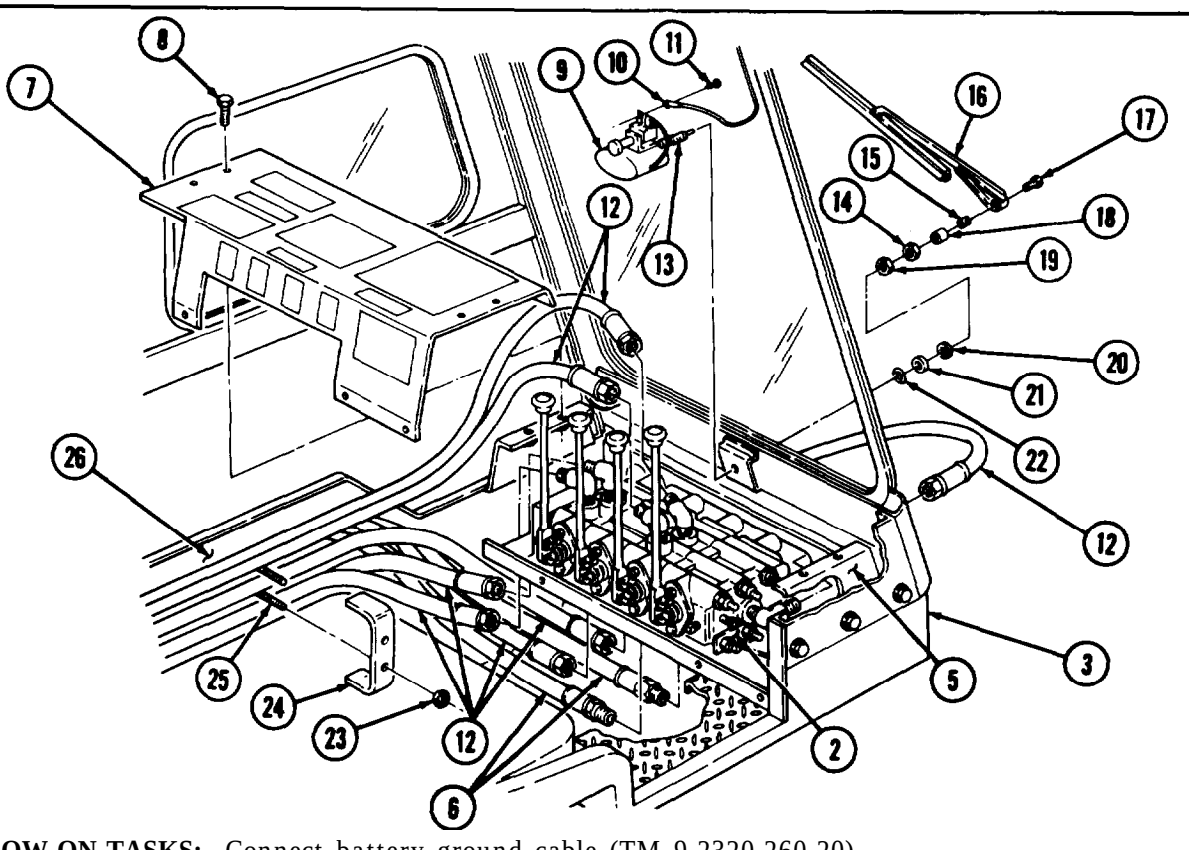

FOLLOW-ON TASKS: • Connect battery ground cable (TM 9-2320-260-20).
• Fill hydraulic oil tank (LO 9-2320-260-12).
Ž Check crane operation and check for leaks (TM 9-2320-260-10).

16-37. REUEF VALVE MAINTENANCE (M819)

THIS TASK COVERS:

a. Removal
b. Disassembly
c. Cleaning and Inspection
d. Assembly
e. Installation

INITIAL SETUP

APPLICABLE MODELS
M819

Tools
General mechanic's tool kit (Appendix B, Item 1)
Two 1-1/2-in. open-end wrench (Appendix B, Item 125)
14-in. pipe wrench (Appendix B, Item 129)
Vise (Appendix B, Item 38)
Arbor press (Appendix B, Item 7)

MATERIALS/PARTS
Two O-rings (Appendix D, Item 272)
O-ring (Appendix D, Item 273)

MATERIALS/PARTS (Contd)
Gasket (Appendix D, Item 61)
Packing (Appendix D, Item 313)
Lubricating oil (Appendix C, Item 20)
Antiseize tape (Appendix C, Item 50)
Cap and plug set (Appendix C, Item 6)

REFERENCES (TM)
LO 9-2320-260-12
TM 9-2320-260-10
TM 9-2320-260-34P-2

EQUIPMENT CONDITION
Ž Parking brake set (TM 9-2320-260-10).
• Hydraulic oil tank drained (LO 9-2320-260-12).

a Removal

CAUTION

• Clean area around hoses and lines before removal to prevent entry of dirt. Damage will occur if dirt or dust enters system.

Ž Cap or plug all openings immediately after disconnecting lines and hoses to prevent contamination. Remove caps and plugs before installation. Failure to do so may result in damage to hydraulic system.

NOTE

Tag hoses for installation.

1. Disconnect hose (1) from elbow (3) on hydraulic oil reservoir (2).
2. Loosen nut (9) on adapter (10) and disconnect hose (8).
3. Loosen nut (6) on adapter elbow (7) and disconnect hose (5).
4. Remove hose (1) from tee fitting (15).
5. Remove adapter elbow (7) from tee fitting (15) and tee fitting (15) from bushing (14).
6. Remove relief valve (13) from pipe nipple (4).
7. Place relief valve (13) in vise and remove adapter (10) from bushing (11).
8. Remove bushings (11), (12), and (14) from relief valve (13).

b. Disassembly

1. Remove capnut (16) and packing (17) from adjusting screw (18). Discard packing (17).

NOTE

Record position of adjusting screw for installation.

2. Loosen jamnut (19) and remove adjusting screw (18), jamnut (19), and O-ring (20) from retainer (21). Take jamnut (19) off adjusting screw (18). Discard O-ring (20).

16-37. RELIEF VALVE MAINTENANCE (M819)

3. Remove retainer (21) and O-ring (22) from valve body (13). Discard O-ring (22).
4. Remove spring guide (29) and spring (28) from valve body (13).
5. Turn valve body (13) over and allow plunger (27) to drop out of sleeve (26).
6. Remove screw (25), gasket (24), and setscrew (23) from side of valve body (13). Discard gasket (24).
7. Using arbor press, press sleeve (26) out of valve body (13).

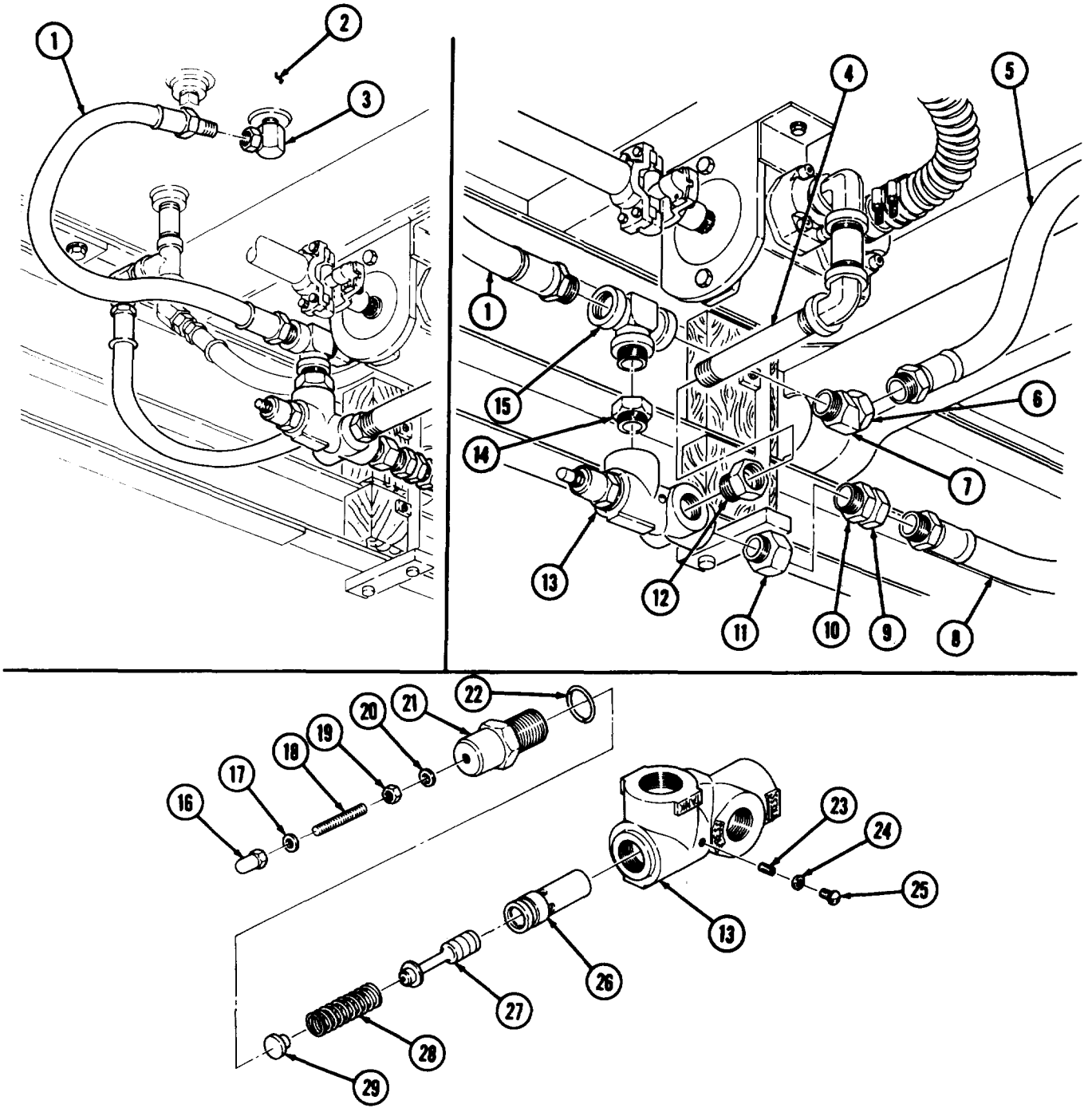

16-37. RELIEF VALVE MAINTENANCE (M819) (Contd)

c. Cleaning and Inspection

1. For general cleaning instructions, refer to para. 2-8.
2. For general inspection instructions, refer to para. 2-9.
3. Inspect spring (14) for breaks, bends, or collapsed coils. Replace spring (14) if damaged.
4. Inspect adjusting screw (3) for bends and stripped or damaged threads. Replace adjusting screw (3) if damaged.
5. Inspect plunger (13) for bends, burrs, chipped edges, and scoring. Repair or replace plunger (13) if damaged.
6. Inspect sleeve (12) for burrs, scoring, chipped sealing edge, and blocked ports. Repair or replace sleeve (12) if damaged.
7. Inspect retainer (6) for damaged threads or burred flats. Repair or replace retainer (6) if damaged.
8. Inspect valve body (8) for cracks, chipped sealing edges, and damaged threads. Repair or replace valve body (8) if damaged.
9. Repair minor burrs, scoring, and thread damage on all parts except adjusting screw (3) and spring (14) (para. 2-10). Replace unrepairable parts.

d. Assembly

NOTE

Coat all parts with lubricating oil before installation.

1. Using arbor press, press sleeve (12) into bore of valve body (8). Seat sleeve (12) flush with drain chamber edge. Remove any burrs on sealing edge of sleeve (12).
2. Install setscrew (9), new gasket (10), and-screw (11) in side of valve body (8). Ensure setscrew (9) seats in groove of sleeve (12).
3. Aline large end of plunger (13) in bore of sleeve (12) and drop plunger (13) in sleeve (12).
4. Position spring (14) and spring guide (15) on plunger (13).
5. Position new O-ring (7) in groove on retainer (6) and install retainer (6) on valve body (8) over spring (14) and spring guide (15).
6. Install adjusting screw (3) on retainer (6) until adjusting screw (3) makes contact with spring guide (15).
7. Position new O-ring (5) over adjusting screw (3) and install jamnut (4) on adjusting screw (3). Turn jamnut (4) until in contact with O-ring (5).
8. Back adjusting screw (3) out of retainer (6) three turns.
9. Shake valve body (8) and ensure plunger (13) moves off seat of sleeve (12).
10. Loosening jamnut (4) as necessary, screw in adjusting screw (3) to recorded position.
11. Tighten jamnut (4) onto O-ring (5).
12. Install new packing (2) and capnut (1) on adjusting screw (3).

e. Installation

1. Wrap male threads on adapter (22), adapter elbow (19), tee fitting (26), and hoses (17) and (27) with antiseize tape.
2. Place relief valve (8) in vise and install bushings (23), (24), and (25) on relief valve (8).
3. Install adapter (22) and adapter elbow (19) on bushing (23) and tee fitting (26).
4. Install relief valve (8) on pipe nipple (16).
5. Install tee fitting (26) on bushing (25).

16-37. RELIEF VALVE MAINTENANCE (M819) (Contd)

6. Connect hose (17) to adapter elbow (19) with nut (18).
7. Connect hose (20) to adapter (22) with nut (21).
8. Connect hose (27) to tee fitting (26).
9. Connect hose (27) to elbow (29) on hydraulic oil reservoir (28).

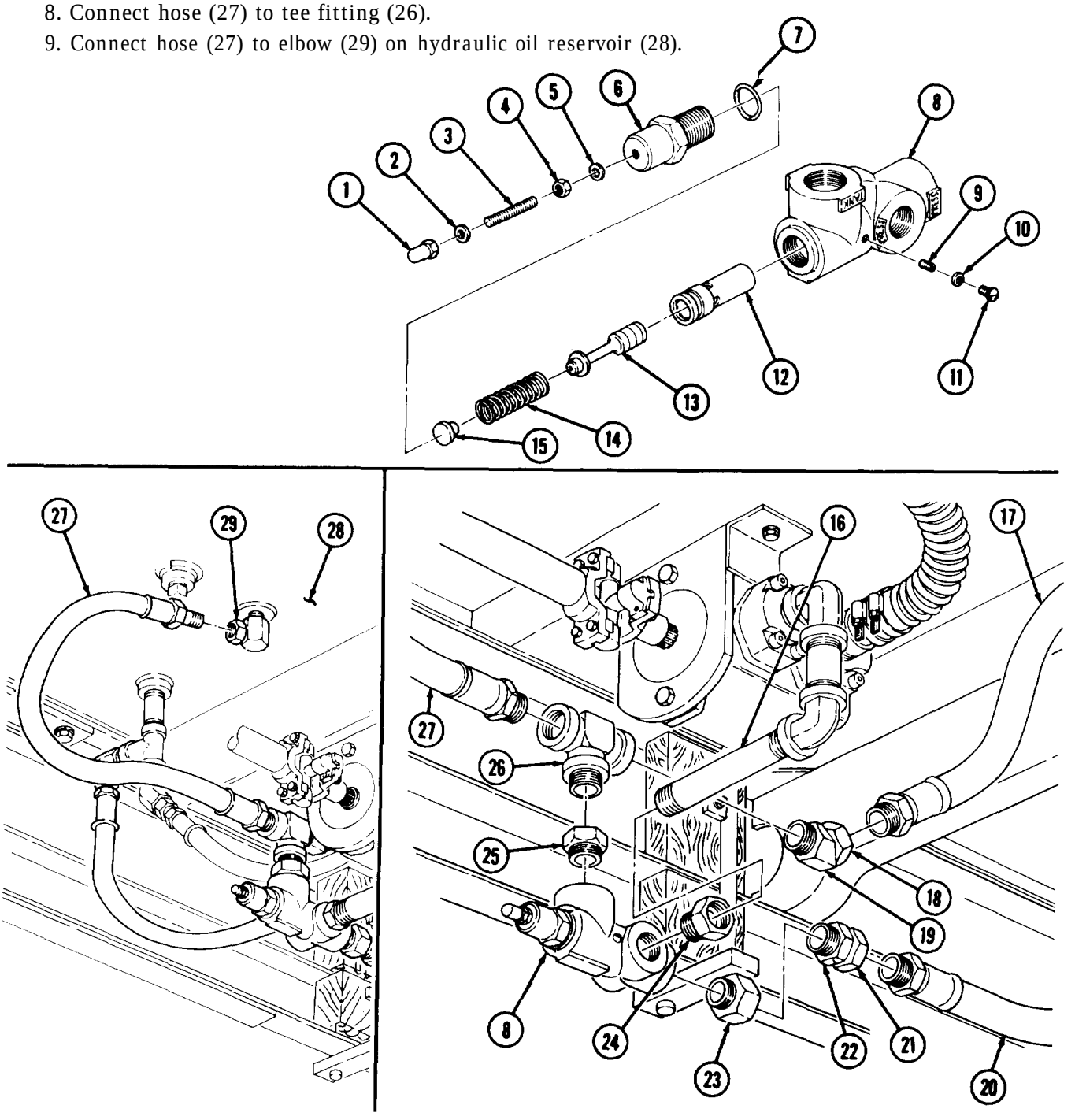

FOLLOW-ON TASKS:
- Fill hydraulic oil system (LO 9-2320-260-12).
- Check crane operation and check for leaks (TM 9-2320-260-10).
- Check pressure relief adjustment (TM 9-2320-260-20).

16-38. CHECK VALVES REPLACEMENT (M819)

THIS TASK COVERS:

a. Elevating Cylinder Check Valve Removal
b. Hoist Winch Motor Check Valve Removal
c. Elevating Cylinder Check Valve Installation
d. Hoist Winch Motor Check Valve Installation

INITIAL SETUP

APPLICABLE MODELS
M819

TOOLS
General mechanic's tool kit (Appendix B, Item 1)
1-11/16-in. open-end wrench (Appendix B, Item 127)

MATERIALS/PARTS
Antiseize tape (Appendix C, Item 50)
Cap and plug set (Appendix C, Item 6)

REFERENCES (TM)
LO 9-2320-260-12
TM 9-2320-260-10
TM 9-2320-260-34P-2

EQUIPMENT CONDMON
- Parking brake set (TM 9-2320-260-10).
- Drain hydraulic oil reservoir (LO 9-2320-260-12).

CAUTION

- Clean area around hoses and lines before removal to prevent entry of dirt. Damage will occur if dirt or dust enters system.
- Cap or plug all openings immediately after disconnecting lines and hoses to prevent contamination. Remove caps or plugs prior to installation. Failure to do so may result in hydraulic system damage.

a. Elevating Cylinder Check Valve Removal

NOTE

- Have drainage container ready to catch oil.
- Tag hoses and tubes for installation.

1. Holding nut (4) on hose (1), loosen nut (3) and disconnect hose (1) from tube (2).
2. Remove hose (1) from check valve (6).
3. Remove check valve (6) from elbow (5).

b. Hoist Winch Motor Check Valve Removal

NOTE

- Have drainage container ready to catch oil.
- Tag hoses and tubes for installation.

1. Holding nut (12) on hose (7), loosen nut (11) and disconnect hose (7) from tube (10).
2. Remove hose (7) from check valve (8).
3. Remove check valve (8) from elbow (9).

c. Elevating Cylinder Check Valve Installation

1. Wrap male threads on elbow (5) and hose (1) with antiseize tape.
2. Install check valve (6) on elbow (5).
3. Install hose (1) in check valve (6).
4. Connect hose (1) to tube (2) with swivel nut (3) and nut (4).

16-38. CHECK VALVES REPLACEMENT (M819) (Contd)

d. Hoist Winch Motor Check Valve Installation

1. Wrap male threads on hose (7) and elbow (9) with antiseize tape.
2. Install check valve (8) on elbow (9).
3. Install hose (7) in check valve (8).
4. Connect hose (7) on tube (10) with swivel nut (11) and nut (12).

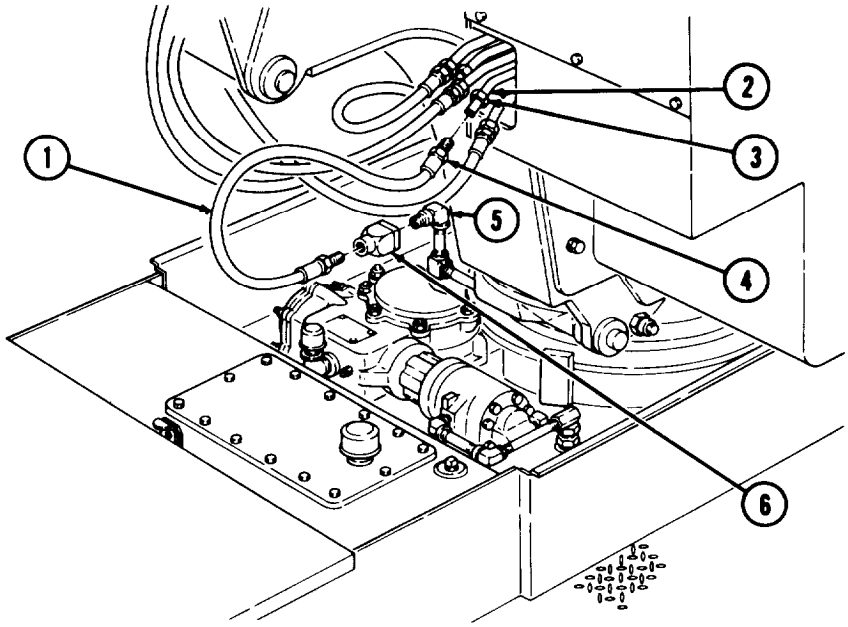

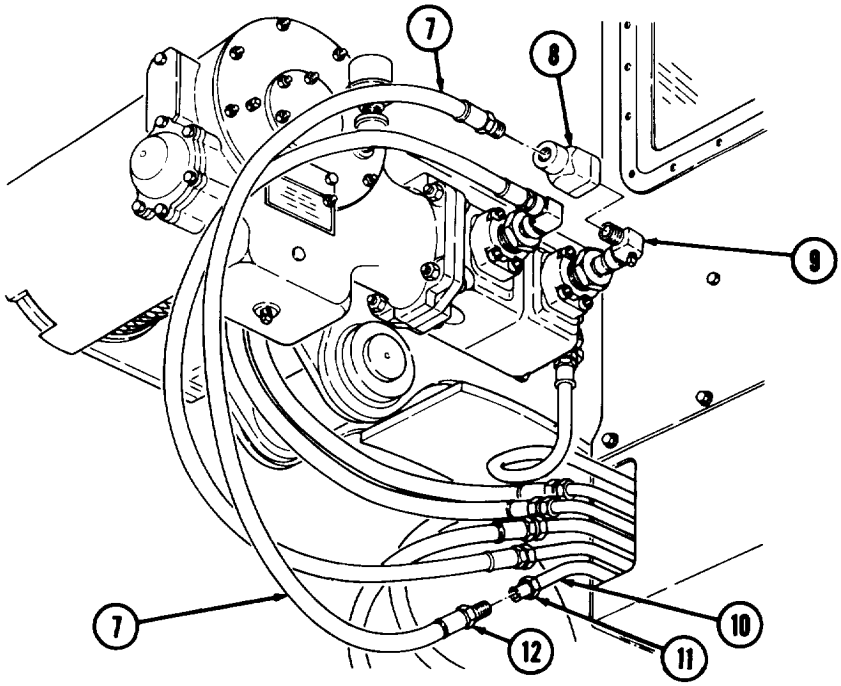

FOLLOW-ON TASKS: • Fill hydraulic oil reservoir (LO 9-2320-260-12).
• Check crane operation (TM 9-2320-260-10).

Section IV. TRANSMISSION POWER TAKEOFF MAINTENANCE

16-39. TRANSMISSION POWER TAKEOFF MAINTENANCE INDEX

PARA. NO.	TITLE	PAGE NO.
16-40.	Transmission Power Takeoff Replacement	16-230
16-41.	Transmission Power Takeoff Repair	16-232

16-40. TRANSMISSION POWER TAKEOFF REPLACEMENT

THIS TASK COVERS:

a. Removal b. Installation

INITIAL SETUP

APPLICABLE MODELS
All

TOOLS
General mechanic's tool kit (Appendix B, Item 1)

MATERIALS/PARTS
Seven lockwashers (Appendix D, Item 242)
Gasket (Appendix D, Item 134)
Locknut (Appendix D, Item 204)
Cotter pin (Appendix D, Item 48)

REFERENCES (TM)
LO 9-2320-260-12
TM 9-2320-260-20
TM 9-2320-260-34P-2

EQUIPMENT CONDITION
- Front winch propeller shaft disconnected (if so equipped) (TM 9-2320-260-20).
- Hydraulic pump propeller shaft disconnected (M817, M820A2) (TM 9-2320-260-20).
- Front and rear cab tunnel covers removed (TM 9-2320-260-20).
- Transmission oil drained (LO 9-2320-260-12).

a. Removal

NOTE

Ž Perform step 1 for M817 and M820A2 vehicles.

- Perform step 2 for vehicles except M817 and M820A2.

1. Remove cotter pin (2), pin (4), and control rod (3) from PTO (1). Discard cotter pin (2).
2. Remove screw (7) and lockwasher (6) from PTO (1) and control lever (8). Discard lockwasher (6).
3. Remove locknut (5), screw (9), and control lever (8) from PTO (1). Discard locknut (5).
4. Remove six nuts (12), lockwashers (11), PTO (1), and gasket (13) from transmission housing (14). Discard lock washers (11) and gasket (13).

NOTE

Perform step 5 if studs are damaged.

5. Remove six studs (10) from transmission housing (14).

16-40. TRANSMISSION POWER TAKEOFF REPLACEMENT (Contd)

NOTE

Perform step 1 if studs were removed.

1. Install six studs (10) on transmission housing (14).
2. Position new gasket (13) and PTO (1) on studs (10) and transmission housing (14) and install with six new lockwashers (11) and nuts (12).

NOTE

- Perform steps 3 and 4 for all vehicles except M817 and M820A2.
- Perform step 5 for M817 and M820A2 vehicles.

3. Install control lever (8) on PTO (1) with screw (9) and new locknut (5).
4. Install control lever (8) on PTO (1) with new lockwasher (6) and screw (7).
5. Install control rod (3) on PTO (1) with pin (4) and new cotter pin (2).

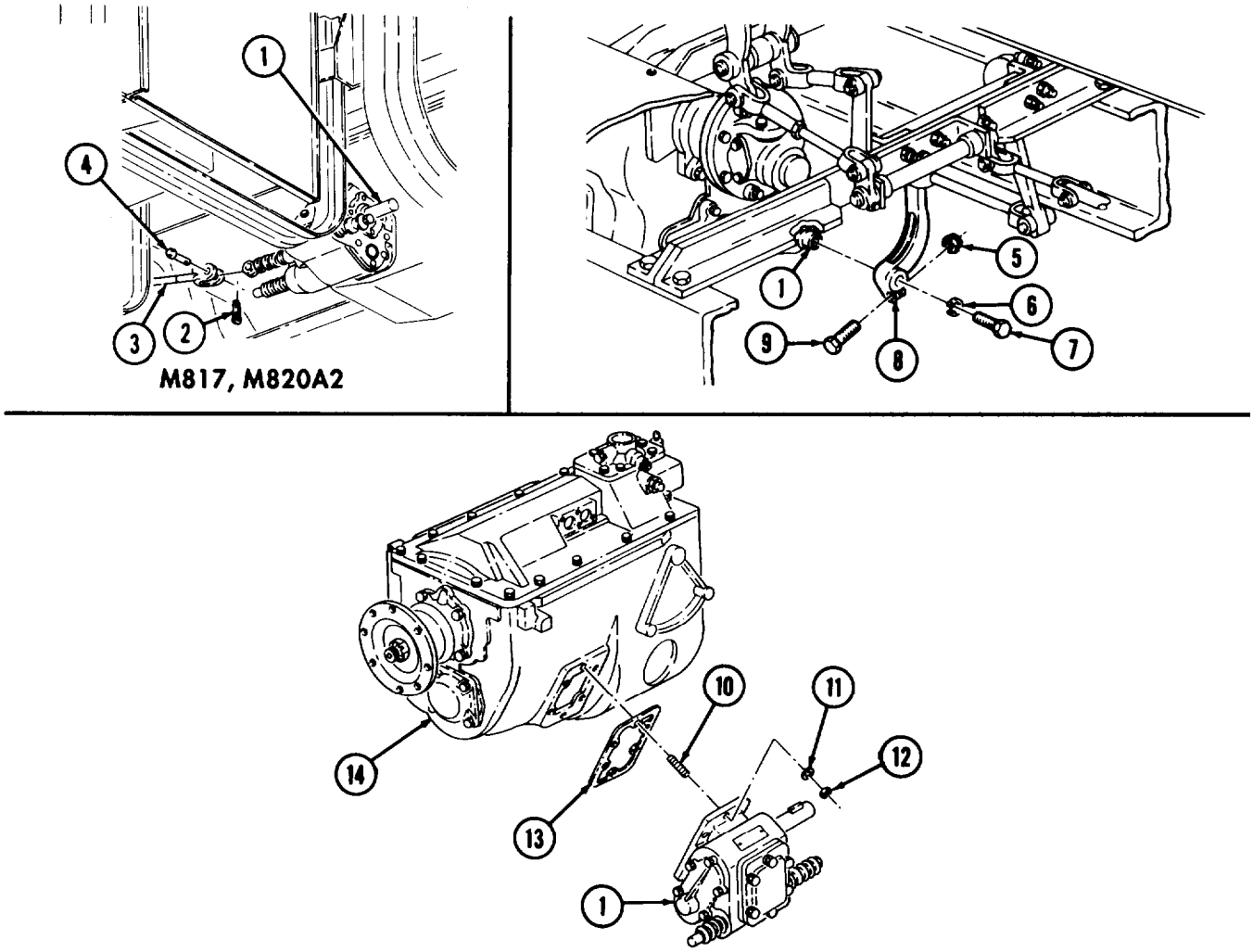

FOLLOW-ON TASKS: Ž Install front winch propeller shaft (if so equipped) (TM 9-2320-260-20).
- Install hydraulic pump propeller shaft (M817, M820A2) (TM 9-2320-260-20).
- Install front and rear cab tunnel covers (TM 9-2320-260-20).
- Fill transmission with gear oil (LO 9-2320-260-12).

16-41. TRANSMISSION POWER TAKEOFF REPAIR

THIS TASK COVERS:

a. Disassembly
b. Cleaning, Inspection, and Repair
c. Assembly

INITIAL SETUP

APPLICABLE MODELS
All

TOOLS
General mechanic's tool kit (Appendix B, Item 1)
Mechanical puller kit (Appendix B, Item 14)
Outside micrometer (Appendix B, Item 8)
Inside micrometer (Appendix B, Item 9)
Vernier caliper (Appendix B, Item 33)
Arbor press (Appendix B, Item 7)

MATERIALS/PARTS
Fifteen lockwashers (Appendix D, Item 252)
Two retainers (dual output) (Appendix D, Item 338)
Cotter pin (Appendix D, Item 50)
Cotter pin (Appendix D, Item 19)
Three seals (Appendix D, Item 465)
Three retainers (Appendix D, Item 338)

MATERIALS/PARTS (Contd)
Two seals (dual output) (Appendix D, Item 465)
Gasket (Appendix D, Item 134)
Gasket (Appendix D, Item 110)
Gasket (Appendix D, Item 108)
Woodruff key (Appendix D, Item 564)
Bushing (Appendix D, Item 11)
Safety wire (Appendix D, Item 375)
GAA grease (Appendix C, Item 14)
Lubricating oil (Appendix C, Item 20)
Sealing compound (Appendix C, Item 42)
Mineral oil (Appendix C, Item 23)

REFERENCES (TM)
TM 9-2320-260-34P-2

EQUIPMENT CONDITION
Transmission power takeoff removed (para. 16-40).

a. Disassembly

1. Remove six screws (7), lockwashers (6), cover (5), and gasket (4) from PTO housing (8). Discard lockwashers (6) and gasket (4).
2. Remove retainer (1), spring (2), and ball (3) from PTO housing (8).
3. Remove safety wire (11) and screw (10) from shift fork (12). Discard safety wire (11).
4. Remove screw (15) and washer (14) from shift pin (13) and slide shift pin (13) out of two boots (9), shift fork (12), and PTO housing (8).
5. Remove shift fork (12) from PTO housing (8).
6. Remove two boots (9) and retainers (17) from PTO housing (8). Discard retainers (17).
7. Remove two seals (16) from PTO housing (8). Discard seals (16).

16-41. TRANSMISSION POWER TAKEOFF REPAIR (Contd)

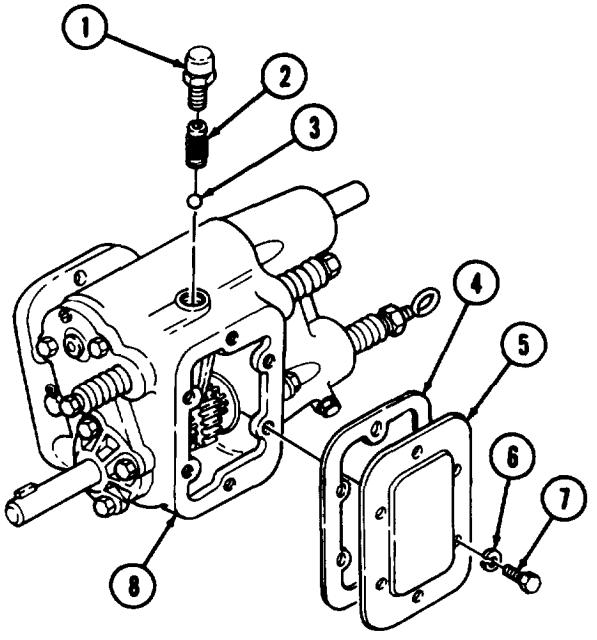

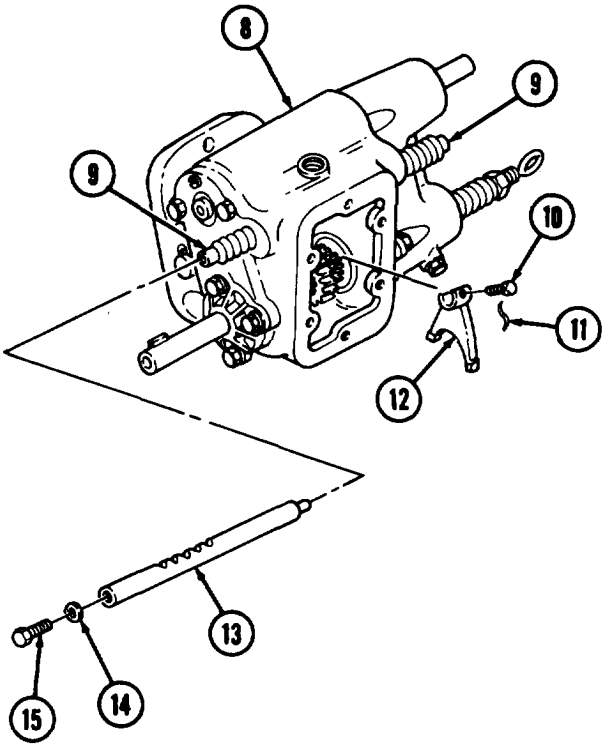

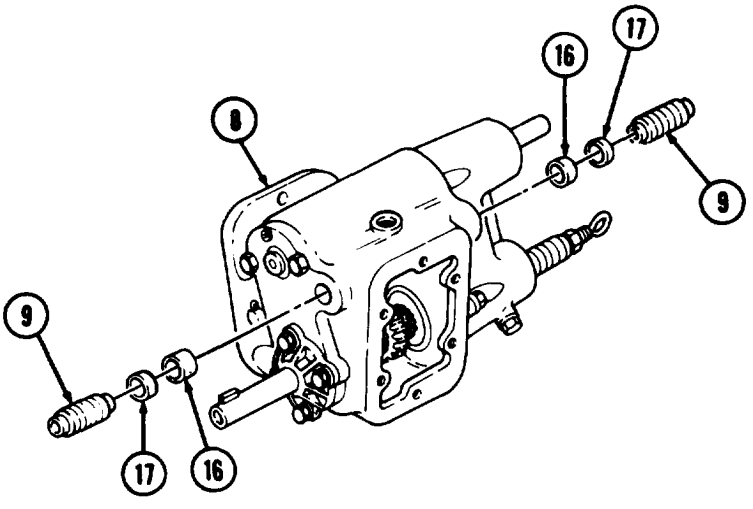

16-41. TRANSMISSION POWER TAKEOFF REPAIR (Contd)

8. Remove cotter pin (1) from PTO housing (2) and input gear pin (3), Discard cotter pin (l).
9. Using drift punch, remove input gear pin (3) from PTO housing (2). Remove end with cotter pin hole first.
10. Remove two thrust washers (4) and input gear (6) from PTO housing (2).
11. Remove two bearings (5) from input gear (6).

NOTE

Perform steps 12 through 24 for dual output shaft PTO.

12. Remove plug (17), spring (18), and ball (19) from cover (12).
13, Remove five screws (11), lockwashers (10), cover (12), and gasket (9) from PTO housing (2). Discard lockwashers (10) and gasket (9).
14. Remove snapring (8) from reverse gear shaft (7).
15. Loosen jamnut (15) and remove eye bolt (14) and washer (13) from rear output shift pin (16).
16. Remove safety wire (25) from screw (24) and shifter fork (20). Discard safety wire (25).
17. Remove screw (24) from shifter fork (20) and rear output shift pin (16).
18. Using brass drift, remove rear output shift pin (16) from shifter fork (20) and cover (12).
19. Remove retainer (22) and boot (23) from cover (12). Discard retainer (22),
20. Remove seal (21) from cover (12). Discard seal (21).
21. Remove seal (31) from cover (12). Discard seal (31).
22. Remove snapring (30) from rear output shaft (27).
23. Using arbor press, remove rear output shaft (27) and clutch gear (26) from bearing (29) and cover (12). Separate clutch gear (26) and rear output shaft (27).
24. Remove two snaprings (28) and bearing (29) from cover (12).

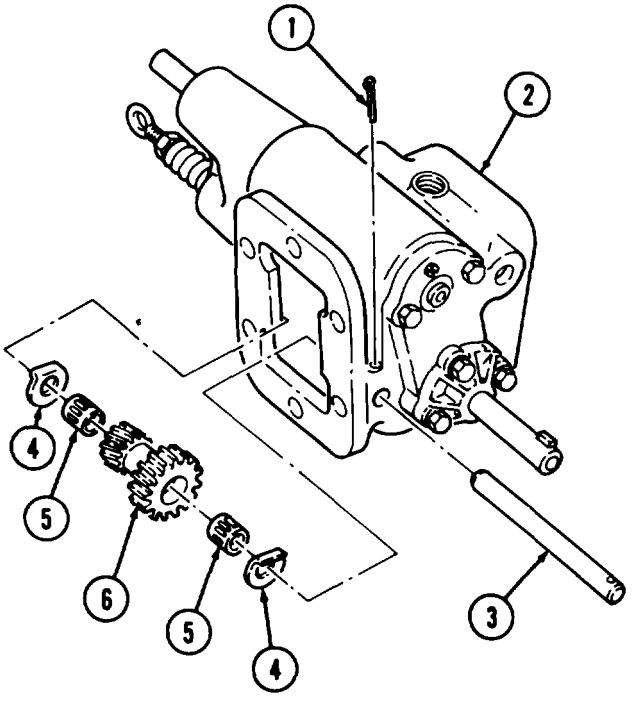

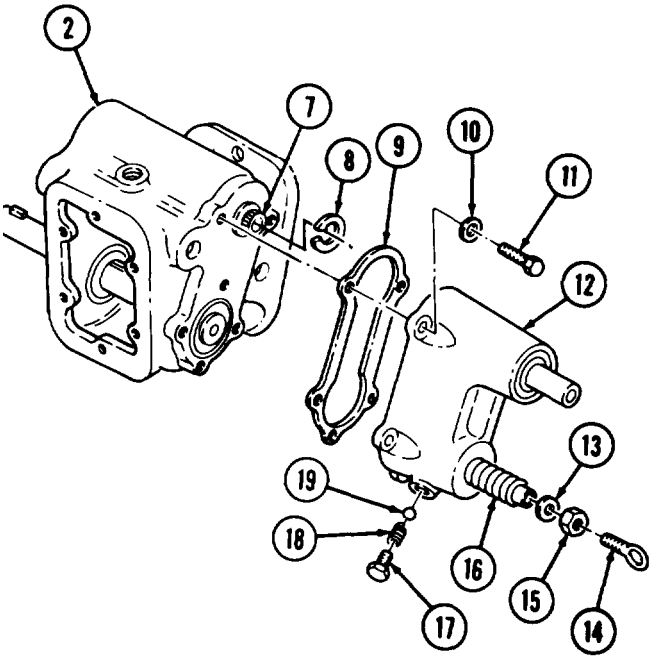

DUAL OUTPUT

16-41. TRANSMISSION POWER TAKEOFF REPAIR (Contd)

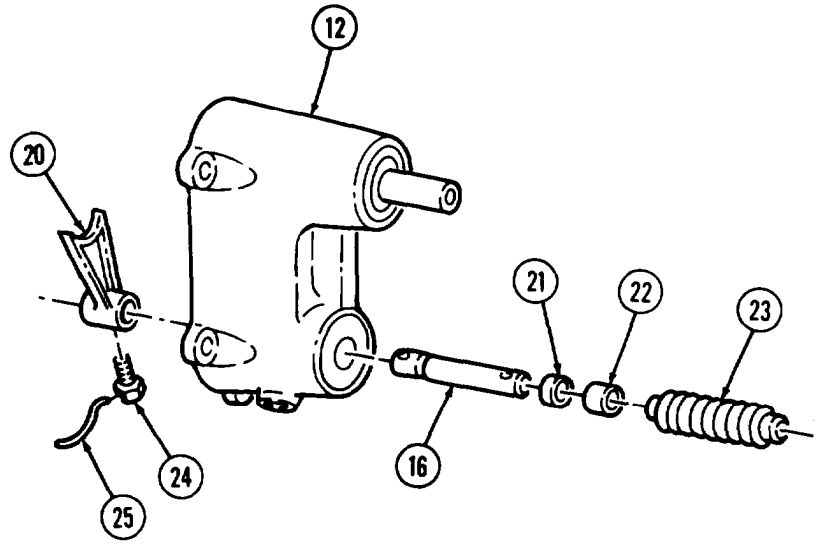

DUAL OUTPUT

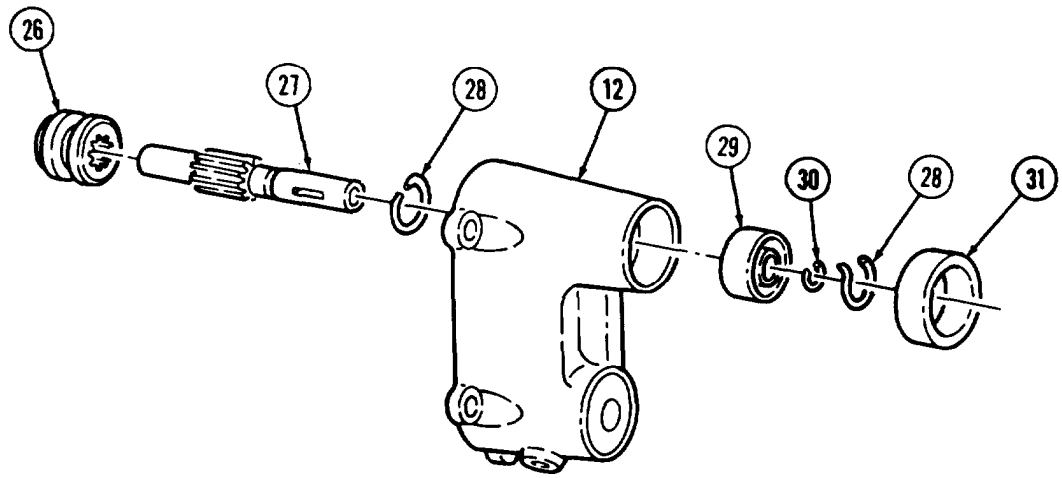

DUAL OUTPUT

16-41. TRANSMISSION POWER TAKEOFF REPAIR (Contd)

NOTE

Perform step 25 for single output shaft PTO.

25. Remove five screws (4), lockwashers (3), cover (5), and gasket (2) from PTO housing (1). Discard lockwashers (3) and gasket (2).
26. Remove four screws (6), lock washers (7), cover (11), and gasket (9) from PTO housing (1) and front output shaft (8). Discard lockwashers (7) and gasket (9).
27. Remove seal (10) from cover (11). Discard seal (10).
28. Using arbor press, remove front output shaft (8) from bearing (17). As front output shaft (8) comes out of bearing (17) and is clear, gear (18) can be removed from front output shaft (8) and PTO housing (1).
29. Using arbor press, remove bearing (17) and spacer (16) from PTO housing (1).
30. Using mechnical puller and arbor press, remove bearing (12) from front output shaft (8).
31. Remove snapring (13) from front output shaft (8).
32. Remove thrust washer (14) and gear (15) from front output shaft (8).
33. Remove cotter pin (28) and clevis pin (25) from reverse gear (27) and reverse gear shaft (23). Discard cotter pin (28).
34. Using arbor press, remove bearing (22) and reverse gear shaft (23) from PTO housing (1) and reverse gear (27). Press on splined end of reverse gear shaft (23).
35. Remove reverse gear (27) and two thrust washers (26) from PTO housing (1).
36. Using bearing puller, remove bearing (19) from PTO housing (1).
37. Remove woodruff key (21) from reverse gear shaft (23). Discard woodruff key (21).
38. Remove plug (20) and two screws (24) from PTO housing (1).

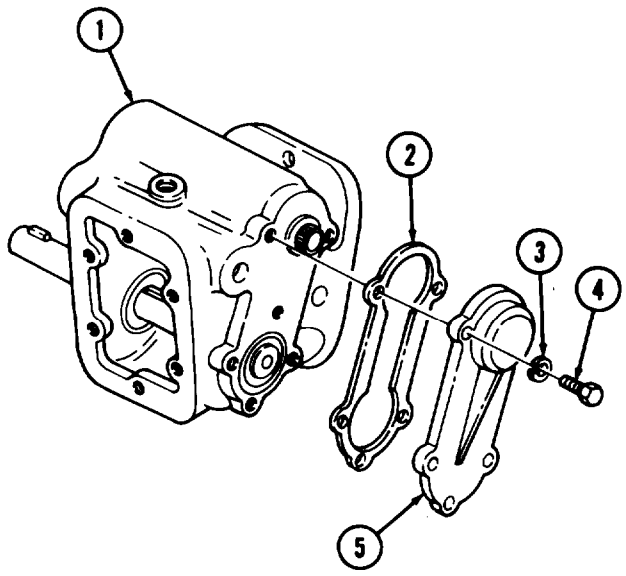

SINGLE OUTPUT

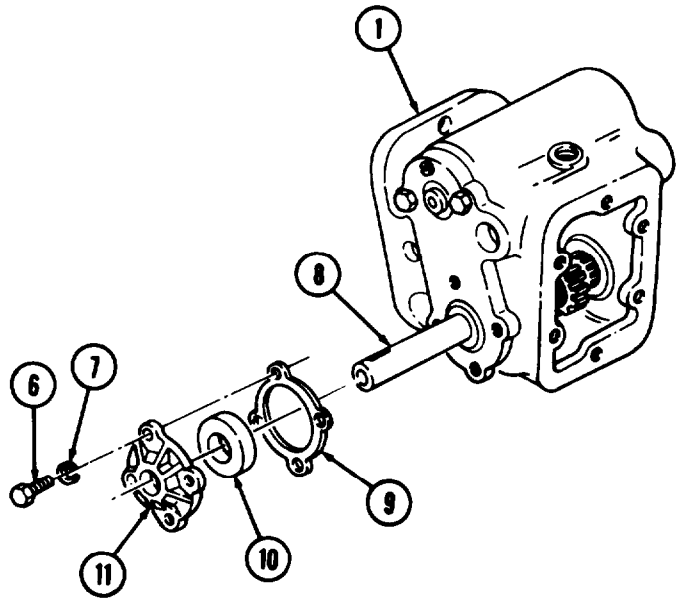

16-41. TRANSMISSION POWER TAKEOFF REPAIR (Contd)

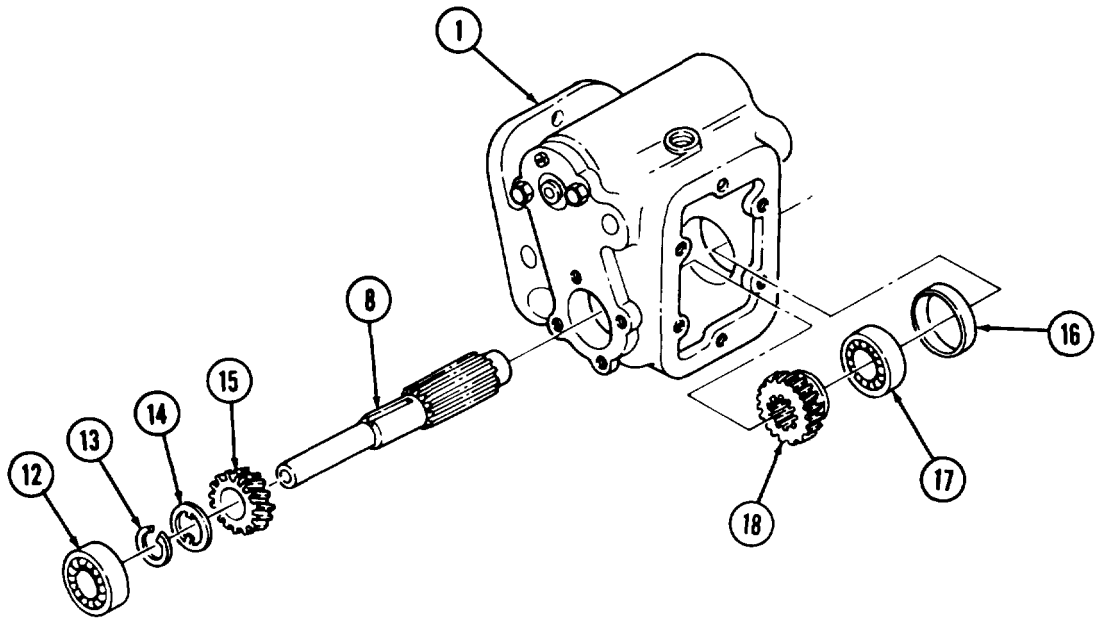

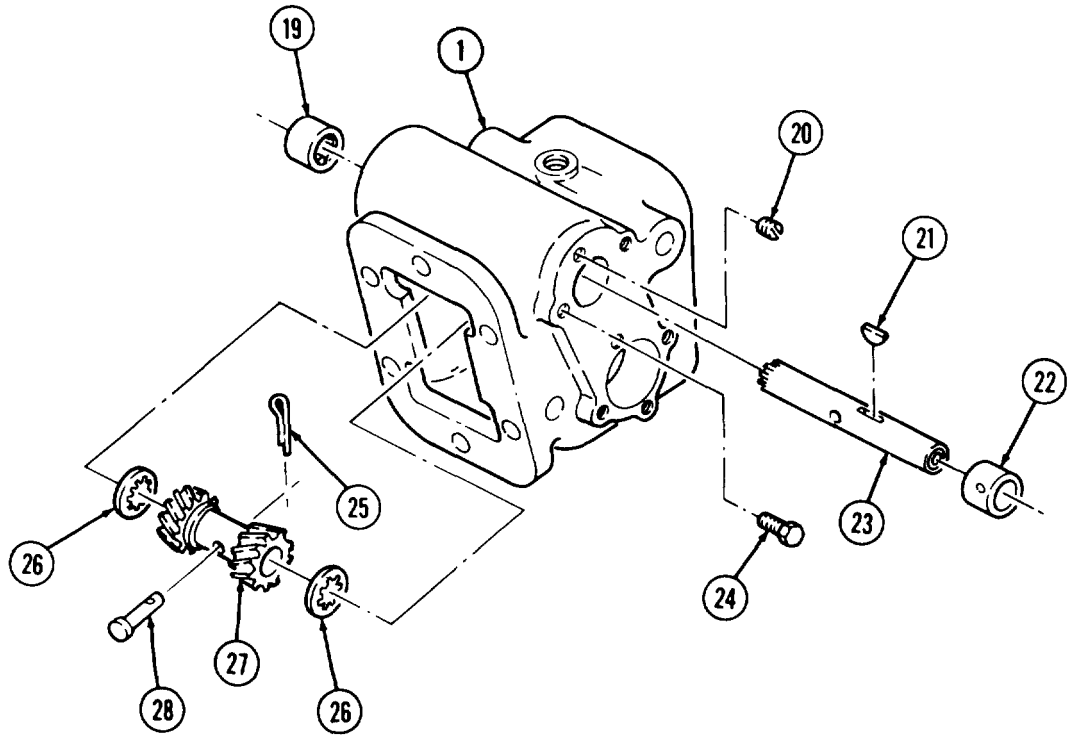

16-41. TRANSMISSION POWER TAKEOFF REPAIR (Contd)

b. Cleaning, Inspection, and Repair

1. For general cleaning instructions, refer to para. 2-8.
2. For general inspection instructions, refer to para. 2-9.
3. Inspect reverse gear shaft (l), front output shaft (3), rear output shaft (4), main shift fork (6), rear shift fork (7), input gear pin (8), shift pin (9), and rear output Shift pin (10) for scores breaks, cracks, pits, burrs, nicks, and wear. Refer to table 16-16, Transmission PTO Wear Limits, for measurements. Repair minor burrs or scoring. Replace part(s) if damaged or worn past limits.
4. Inspect front output shaft cover (5) for scores, breaks, cracks, pits, burrs, and nicks. Replace front output shaft cover (5) if damaged.

NOTE

Perform step 5 for dual output shaft PTO.

5. Inspect rear output shaft (4), rear shift fork (7), and rear output shift pin (10) for scores, breaks, cracks, pits, burrs, nicks, and wear. Refer to table 16-16, Transmission PTO Wear Limits, for measurements. Replace rear output shaft (4), rear shift fork (7), or rear output shift pin (10) if damaged or worn past limits.
6. Inspect bushing (2) of reverse gear shaft (1) for scores, overheating, and wear. Refer to table 16-16, Transmission PTO Wear Limits, for measurements. Replace bushing (2) if damaged or worn.

NOTE

Perform steps 7 and 8 if reverse gear shaft bushing requires replacement.

7. Using puller, remove bushing (2) from reverse gear shaft (1). Discard bushing (2).
8. Using arbor press, install new bushing (2) in reverse gear shaft (1).

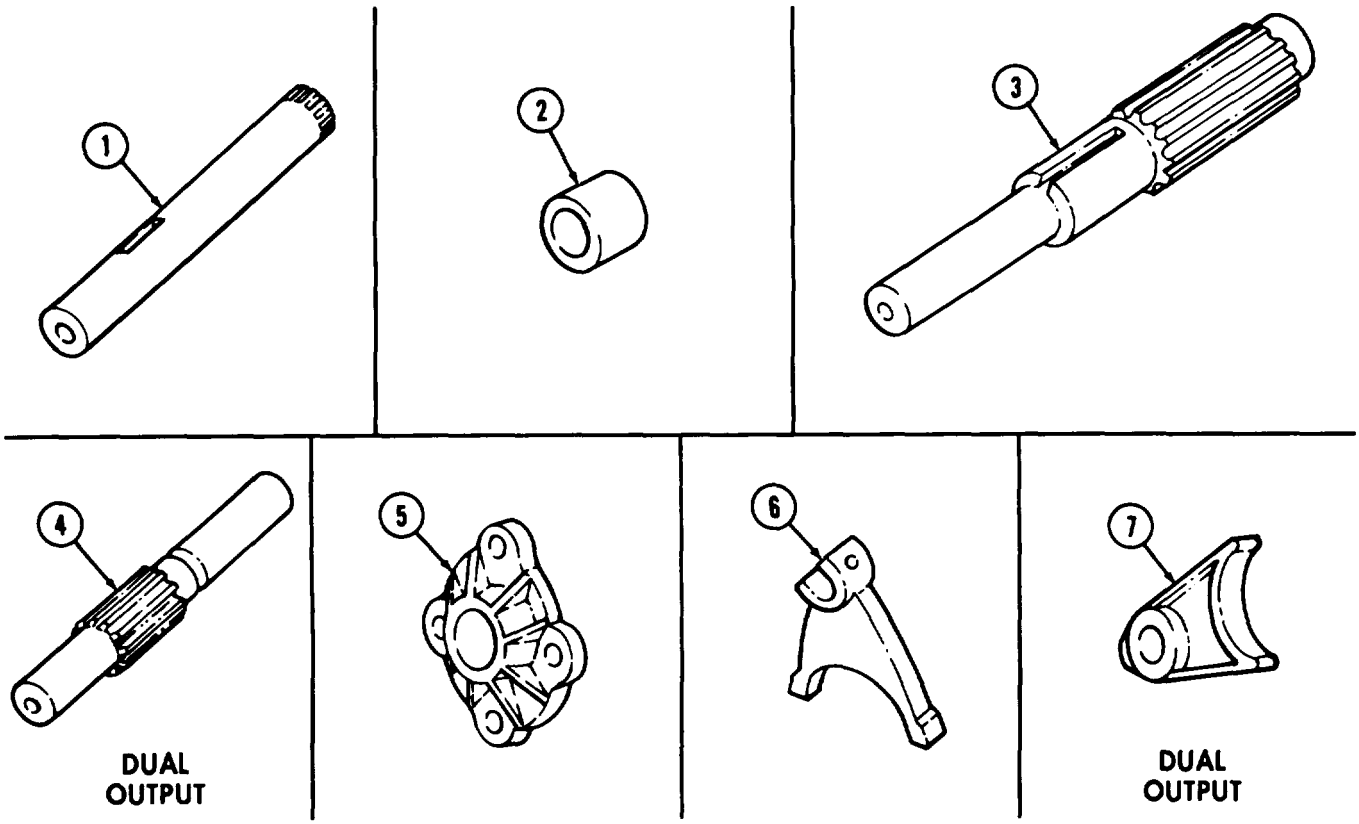

16-41. TRANSMISSION POWER TAKEOFF REPAIR (Contd)

Table 16-16. *Transmission PTO Wear Limits.*

ITEM NO.	ITEM/POINT OF MEASUREMENT	WEAR LIMITS/TOLERANCES	
		INCHES	MILLIMETERS
1	Reverse gear shaft		
	Bushing – inner diameter – maximum	0.626	15.90
	Bushing bore – inner diameter – maximum	0.750	19.05
	Front and rear bearing surfaces – outer diameter – minimum	1.2495	31.737
3	Front output shaft		
	Front and rear bearing - outer diameter – minimum	1.3778	34.996
	Front gear – outer diameter – minimum	1.4035	35.649
4	Rear output shaft		
	Bushing journal – outer diameter – minimum	0.6230	15.824
	Bearing – outer diameter – minimum	0.9843	25.001
6	Main shift fork		
	Bore - inner diameter – maximum	0.687	17.45
	Pad - thickness – minimum	0.370	9.398
7	Rear shift fork		
	Bore – inner diameter – maximum	0.688	17.48
	Pad – thickness – minimum	0.365	9.271
8	Input gear pin		
	Front - outer diameter – minimum	0.7510	19.075
	Rear – outer diameter – minimum	0.7495	19.037
9	Shift pin – outer diameter– minimum	0.6845	17.386
10	Rear output shift pin – outer diameter – minimum	0.6845	17.386

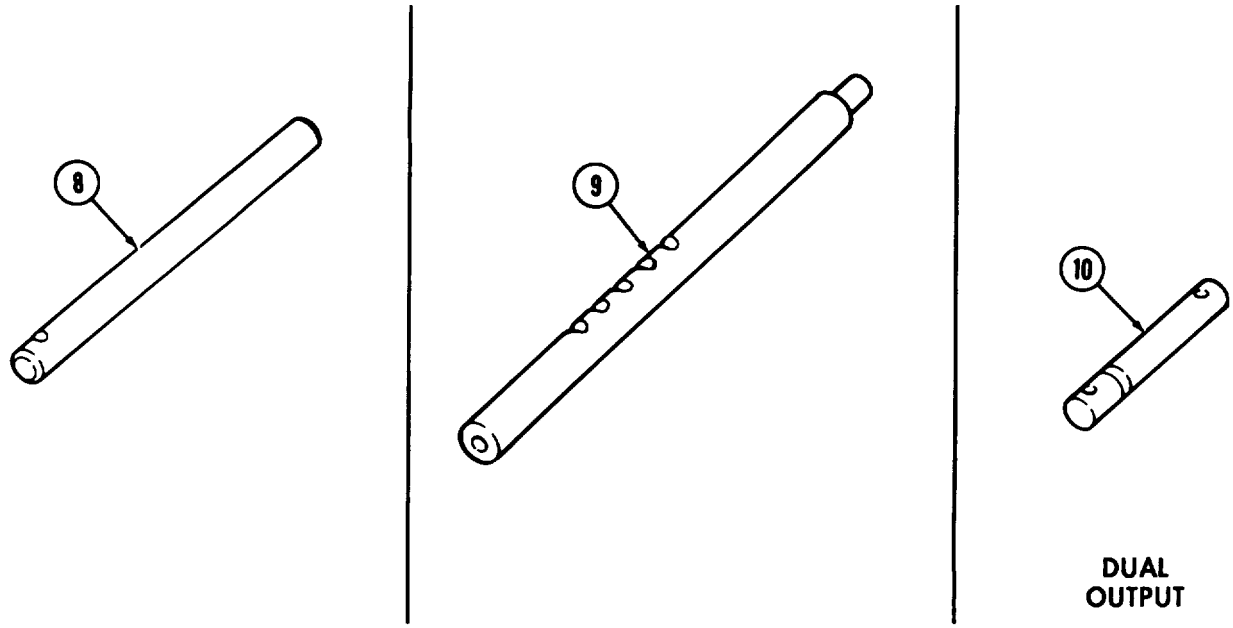

16-41. TRANSMISSION POWER TAKEOFF REPAIR (Contd)

9. Inspect PTO housing (1) for breaks, cracks, nicks, burrs. Repair minor nicks and burrs. Replace PTO housing (1) if damaged.
10. Inspect shifter pin bores (2), front output shaft bearing bores (3), input shaft bearing bores (4), and reverse shaft bearing bores (5) in PTO housing (1) for wear. Refer to table 16-17, Transmission PTO Wear Limits for measurements. Replace PTO housing (1) if bore(s) is worn past limits.
11. Inspect three boots (6) for checking, rips, and tears. Replace boot(s) (6) if checked, ripped, or tom.
12. Inspect two springs (7) for broken coils and distortion, Replace spring(s) (7) if coils are broken or distorted.
13. Inspect cover (8) for breaks, cracks, nicks, and burrs. Replace cover (8) if broken, cracked, nicked, or burred.
14. Inspect cover (9) for breaks, cracks, nicks, burrs, and wear. Refer to table 16-17, Transmission PTO Wear Limits, for measurements. Repair minor nicks and burrs. Replace cover (9) if damaged or worn past limits.
15. Inspect reverse gear (10) and input gear (11) for breaks, cracks, chipped teeth or splines, and wear. Refer to table 16-17, Transmission PTO Wear Limits, for measurements. Replace reverse gear (10) or input gear (11) if damaged or worn past limits.

Table** 16-17, **Transmission PTO Wear Limits.

ITEM NO.	ITEM/POINT OF MEASUREMENT	WEAR LIMITS/TOLERANCES	
		INCHES	MILLIMETERS
2	Shifter pin bores – front and rear – maximum	0.692	17.58
3	Front output shaft bearing bores – front and rear – maximum	2.8356	72.024
4	Input shaft bearing bores		
	Front – maximum	0.7510	19.075
	Rear – maximum	0.7495	19.037
5	Reverse shaft bearing bores – front and rear – maximum	1.5005	38.113
9	Cover		
	Shift pin bore – maximum	0.692	17.58
	Rear bearing bore – maximum	2.0482	52.024
10	Reverse gear – inner diameter – maximum	1.252	31.80
11	Input gear – inner diameter – maximum	1.250	31.75

16-41. TRANSMISSION POWER TAKEOFF REPAIR (Contd)

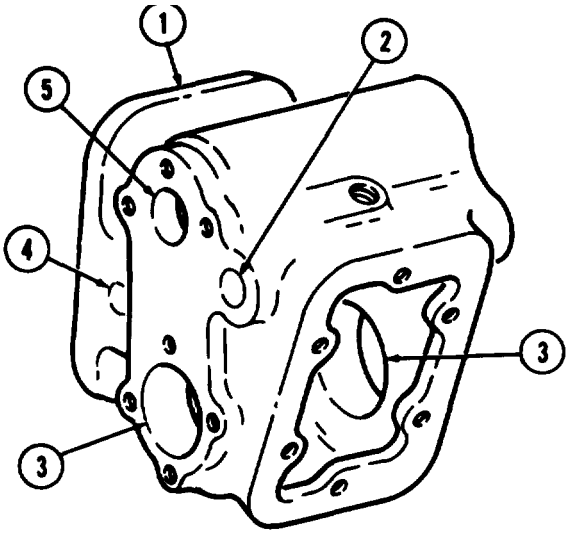

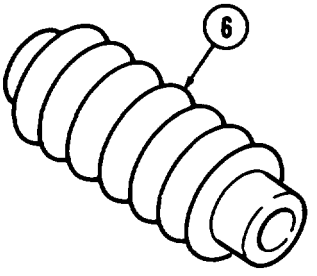

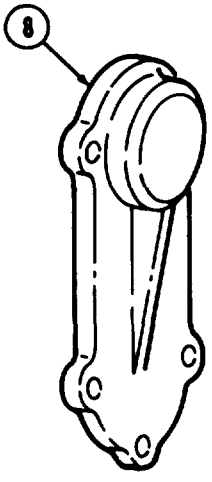

SINGLE OUTPUT

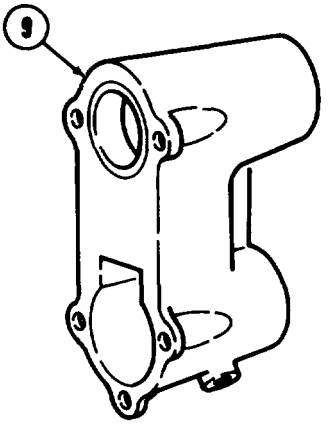

DUAL OUTPUT

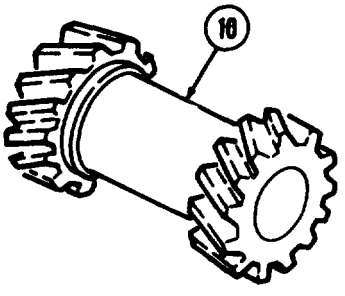

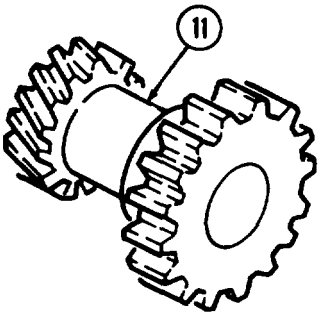

16-41. TRANSMISSION POWER TAKEOFF REPAIR (Contd)

16. Inspect front output shaft bearing (1), rear output shaft bearing (2), reverse shaft bearing (3), rear needle bearing (4), and two input shaft needle bearings (5) for wear. Refer to table 16-18, Transmission PTO Wear Limits, for measurements. Replace bearing(s) (1), (2), (3), (4), or (5) if worn past limits.

17. Inspect spacer (6) and thrust washers (7), (8), and (9) for wear. Refer to table 16-18, Transmission PTO Wear Limits, for measurements. Replace spacer (6) or thrust washer(s) (7), (8), or (9) if worn past limits.

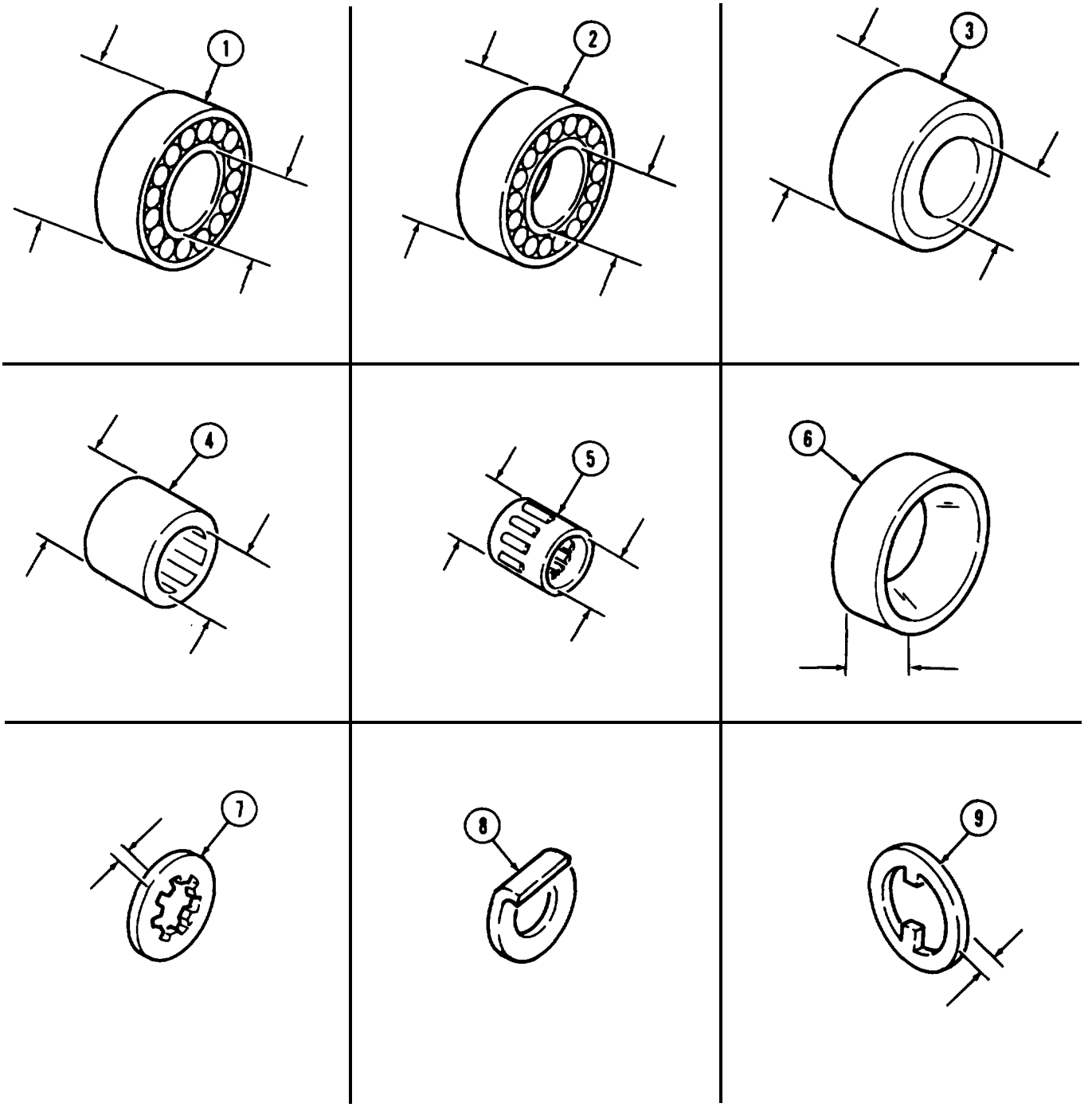

16-41. TRANSMISSION POWER TAKEOFF REPAIR (Contd)

Table 16-18. Transmission PTO Wear Limits.

ITEM NO.	ITEM/POINT OF MEASUREMENT	WEAR LIMITS/TOLERANCES	
		INCHES	MILLIMETERS
1	Front output shaft bearings – ball		
	Outer diameter - minimum	2.8339	71.981
	Inner diameter - maximum	1.3780	35.001
2	Rear output shaft bearing – ball		
	Outer diameter – minimum	2.0467	51.986
	Inner diameter - maximum	0.9843	25.001
3	Reverse shaft bearing		
	Front needle bearing (closed)		
	Outer diameter – minimum	1.5005	38.113
	Inner diameter – maximum	1.2500	31.750
4	Rear needle bearing (open)		
	Outer diameter – minimum	1.4995	38.087
	Inner diameter – maximum	1.2514	31.786
5	Input shaft needle bearings		
	Outer diameter – minimum	1.2505	31.763
	Inner diameter – maximum	0.7500	19.050
6	Spacer – thickness – minimum	0.218	5.537
7	Thrust washer – thickness – minimum	0.061	1.549
8	Thrust washer – thickness – minimum	0.058	1.473
9	Thrust washer – thickness – minimum	0.122	3.099

16-41. TRANSMISSION POWER TAKEOFF REPAIR (Contd)

NOTE

- Coat roller bearings with straight mineral oil prior to installation.
- Coat threads of external screws and retainers and gaskets with sealing compound prior to installation.
- Coat internal parts with light coat of lubricating oil prior to installation.

c. Assembly

1. Install plug (3) and two screws (7) in PTO housing (8).
2. Using arbor press, install bearing (1) in bore (2) of PTO housing (8). Ensure bearing (1) is flush with inner face of bore (2).
3. Install new woodruff key (4) in reverse gear shaft (5).
4. Insert reverse gear shaft (5) through bore (6) of PTO housing (8) and insert through one thrust washer (11), reverse gear (12), and second thrust washer (14), and start into bearing (1). Ensure woodruff key (4) alines with keyway of reverse gear (12).
5. Continue to press reverse gear shaft (5) until hole in reverse gear (12) and reverse gear bore (6) will admit installation of pin (13).
6. Install pin (13) in reverse gear (12) and reverse gear shaft (5) with new cotter pin (10). Bend ends of cotter pin (10) around reverse gear (12). Cotter pin (10) ends must be higher than roots of gear teeth on reverse gear (12).
7. Using arbor press, install bearing (9) over reverse gear shaft (5) and into PTO housing (8). Rolled edges of bearing (9) may be above edge of bore (6) in PTO housing (8).
8. Install gear (18) on front output shaft (19). Slide gear (18) up to splines on front output shaft (19).
9. Position thrust washer (17) over front output shaft (19) and on gear (18) and install with snapring (16).
10. Using arbor press, install bearing (15) on front output shaft (19). Seat to snapring (16).
11. Place splined end of front output shaft (19) through bore (21) in PTO housing (8). Position gear (20) over end of front output shaft (19), and slide gear (20) onto splines of shaft (19). Fork groove of gear (20) is toward rear of PTO housing (8).
12. Continue insertion of front output shaft (19) and use arbor press to seat bearing (15) in bore (21) of PTO housing (8). Seat bearing (15) flush with inner face of bore (21).
13. Using arbor press, install bearing (26) on rear end of front output shaft (19) and into bearing bore (27) of PTO housing (8). Press bearing (26) flush with inner face of bore (27) and to shoulder on front output shaft (19).
14, Coat outer surface of spacer (25) with light coat of GAA grease and place spacer (25) in bore (27) against bearing (26).
15. Install new seal (29) in cover (24).
16. Install new gasket (28) and cover (24) on PTO housing (8) with four new lockwashers (23) and screws (22).

16-41. TRANSMISSION POWER TAKEOFF REPAIR (Contd)

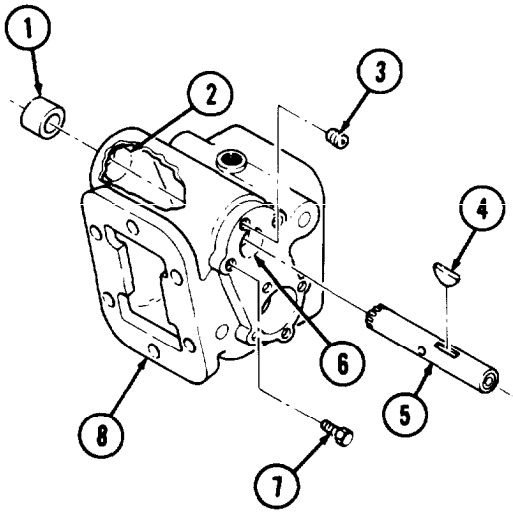

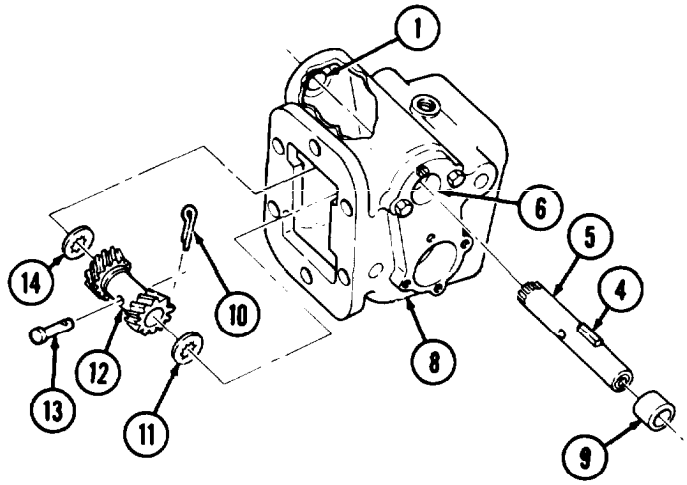

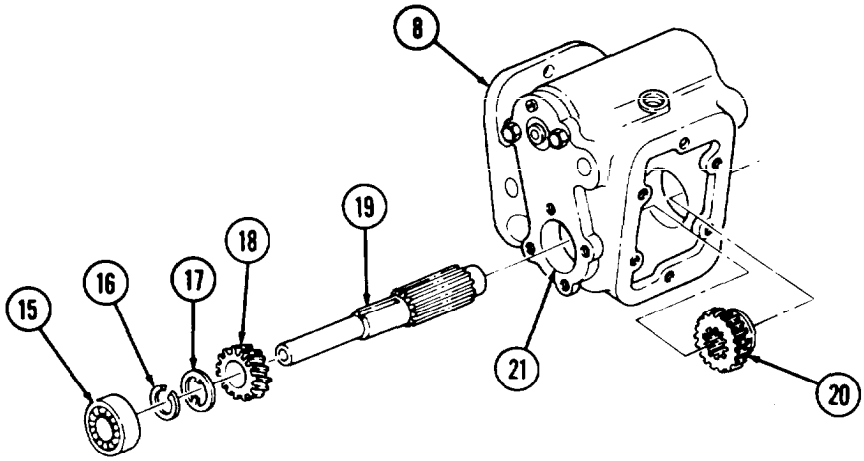

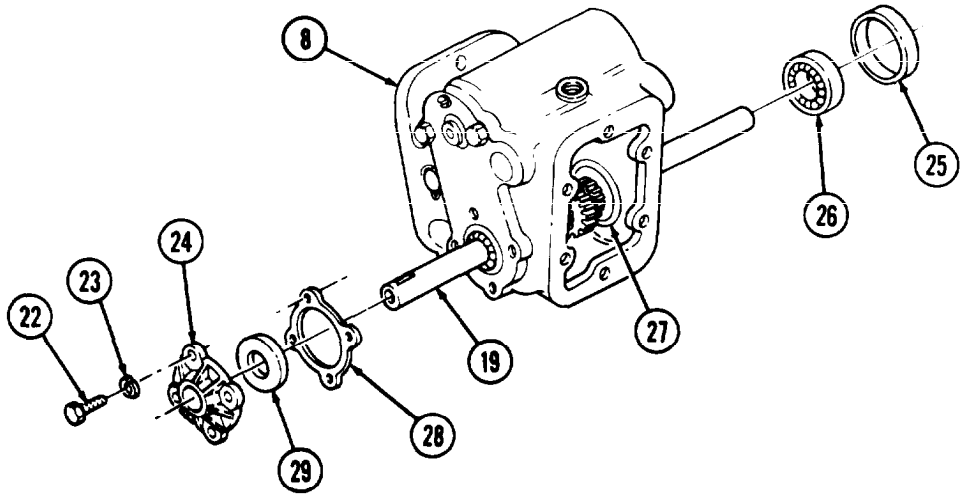

16-41. TRANSMISSION POWER TAKEOFF REPAIR (Contd)

NOTE

Perform steps 17 through 35 for dual output shaft PTO.

17. Install snapring (4) in rear groove of cover (3).
18. Using arbor press and adapter, install bearing (5) in cover (3). Seat bearing (5) against snapring (4).
19. Install snapring (2) in front groove of cover (3).

NOTE

Support inner race of bearing during rear output shaft installation.

20. Using arbor press, install rear output shaft (6), threaded end first, in and through bearing (5). Seat shoulder of rear output shaft (6) to inner race of bearing (5).
21. Install snapring (7) in groove on rear output shaft (6).
22. Install new seal (8) in rear of cover (3).
23. Install new seal (9) in rear pin bore (10) of cover (3).
24. Slide clutch gear (1) onto splines of rear output shaft (6).
25. Position shift fork (13) over groove in rear output shift pin (14) and insert rear output shift pin (14) through bore of shift fork (13). Insert rear output shift pin (14) through rear shift pin bore (10) and seal (9). Threaded end (15) of rear output shift pin (14) goes into bore. Do not put end of rear output shift pin (14) with side hole (16) in first.
26. Aline side hole (16) in rear output shift pin (14) with threaded hole in shift fork (13), and install shift fork (13) on rear output shift pin (14) with screw (12),
27. Install new safety wire (11) in screw (12) and wrap around shift fork (13). Twist ends of safety wire (11) together and bend twist around shift fork (13).
28. Place ball (25) and spring (24) in bore (22) and retain with plug (23).
29. Place boot (17) over rear output shift pin (14) and install boot (17) to cover (3) with new retainer (21).
30. Thread jamnut (18) on eyebolt (19) if it was removed.
31. Place washer (20) over rear output shift pin (14) and install boot (17) to rear output shift pin (14) with eyebolt (19). Tighten jamnut (18) against washer (20).

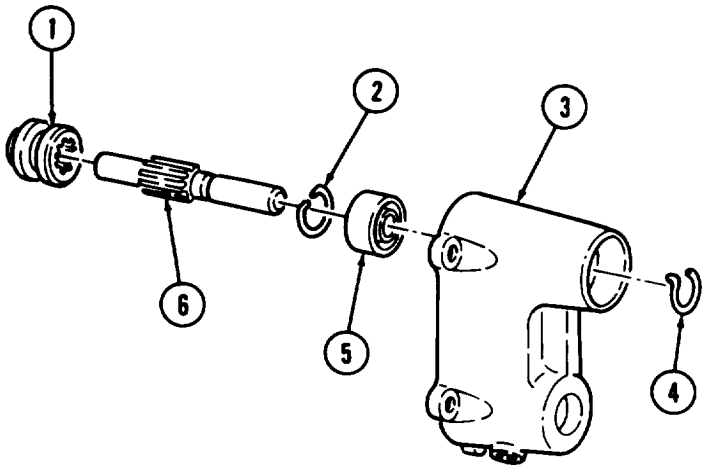

DUAL OUTPUT

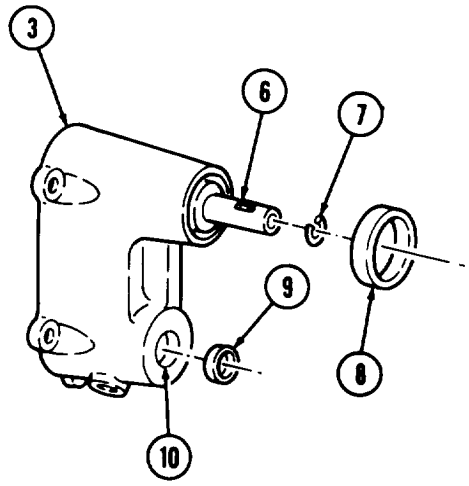

DUAL OUTPUT

16-41. TRANSMISSION POWER TAKEOFF REPAIR (Contd]

32. Install snapring (27) in groove on rear of reverse gear shaft (26).
33. Ensure spacer (31) is in position over bearing in PTO housing (32).
34. Install new gasket (30) and cover (3) over reverse gear shaft (26) and on PTO housing (32) with five new lockwashers (28) and screws (29).
35. Ensure all gears can rotate and both shifter shafts can move to all detent positions.

NOTE

Perform steps 36 through 38 for single output shaft PTO.

36. Ensure spacer (31) is in position over bearing in PTO housing (32).
37. Install new gasket (36) and cover (35) over reverse gear shaft (26) and on PTO housing (32) with five new lockwashers (33) and screws (34).
38. Brush additional gear oil on internal parts of PTO.

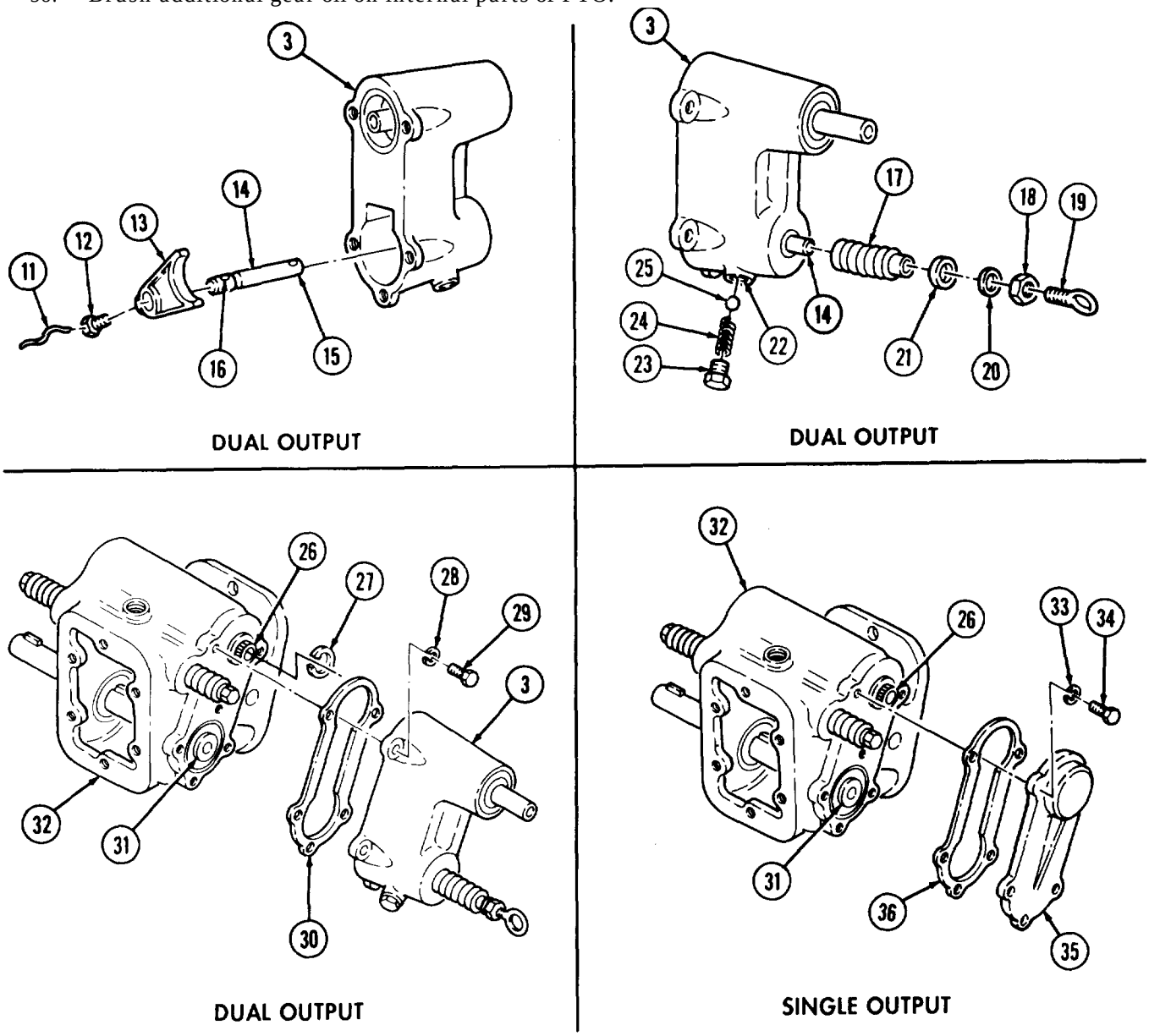

16-41. TRANSMISSION POWER TAKEOFF REPAIR (Contd)

39. Install two bearings (9) in input gear (10). Seat bearings (9) slightly below end faces of input gear (10).

NOTE

- Front end of pin is slightly larger than the other and has a slot in the rear end to aid in pin groove alinement.
- Mark front of pin to indicate groove position.

40. Start input gear pin (5) in front bore (6) of PTO housing (l), small end first.
41. Place thrust washer (8), input gear (10), and second thrust washer (8) over input gear pin (5). Work through opening (7). Large end of input gear (10) is toward front of PTO housing (1).
42. Turn input gear pin (5) and push back and forth until cotter pin groove (4) of input gear pin (5) alines with cotter pin hole (3) in PTO housing (1).
43. Install new cotter pin (2) in PTO housing (1) and input gear pin (5).
44. Install two new seals (11) and (12) in two bores (17) of PTO housing (1).
45. Push shift pin (13), threaded end first, through seal (12) in rear of PTO housing (1).
46. Place lug end of shift fork (15) in slot in gear (16) and push shift pin (13) through bore of shift fork (15) and continue to push shift pin (13) through front seal (11) in bore (17).
47. Turn shift pin (13) to aline groove (14) with screw hole in shift fork (15) and install screw (22) in shift. fork (15) and groove (14) of shift pin (13).
48. Retain screw (22) to shift fork (15) with new safety wire (23). Bend twisted ends of safety wire (23) around shift fork (15) to clear gear (16).
49. Place ball bearing (20) and spring (19) in bore (21) and install with retainer (18).
50. Install new gasket (24) and cover (25) on PTO housing (1) with six new lockwashers (26) and screws (27).
51. Position boot (31) over front end of shift pin (13) and install into PTO housing (1) with new retainer (30).
52. Install washer (29) and screw (28) on shift pin (13).
53. Position boot (32) over rear end of shift pin (13) and install on PTO housing (1) with new retainer (33).

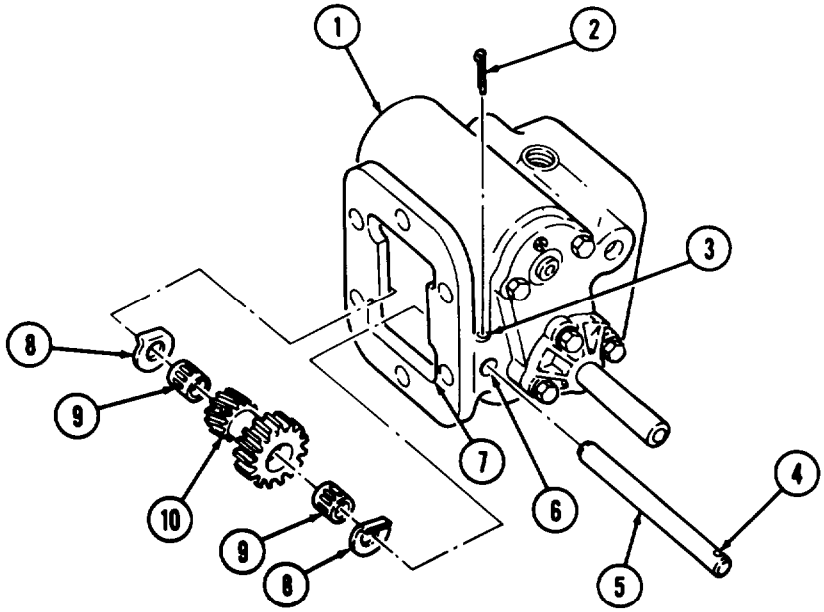

16-41. TRANSMISSION POWER TAKE OFF REPAIR (contd

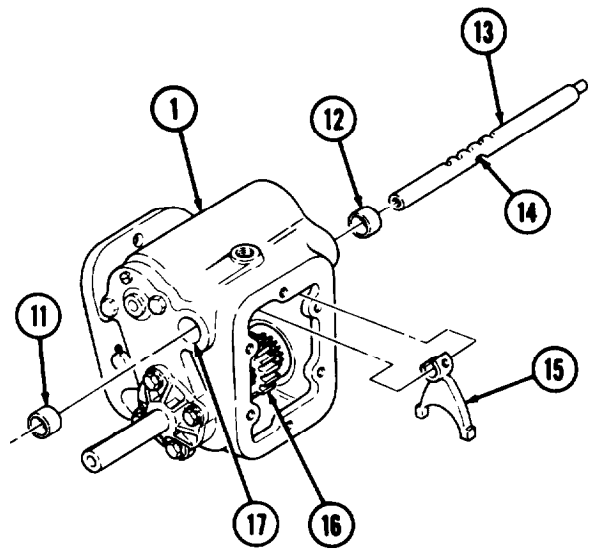

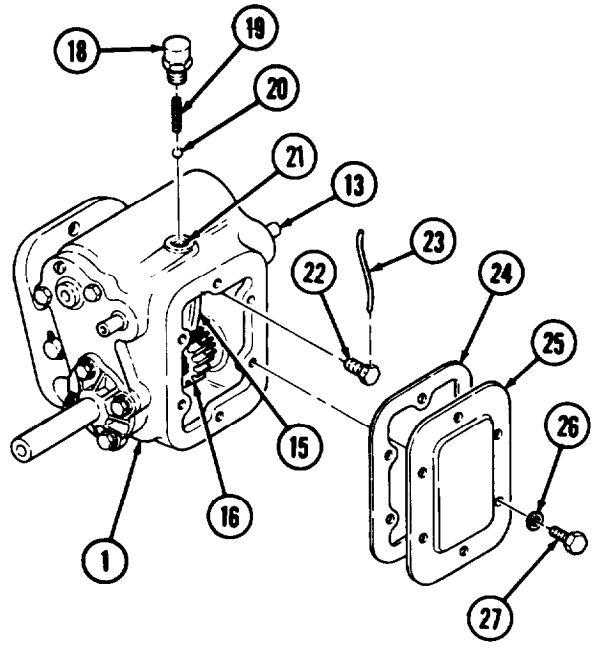

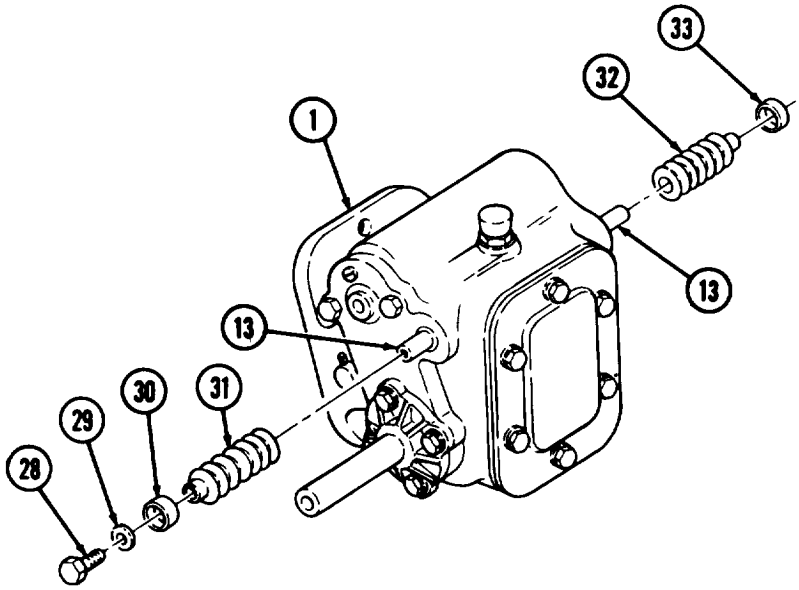

FOLLOW-ON TASK: Install transmission PTO (para. 16-40).

Section V. TRANSFER POWER TAKEOFF MAINTENANCE

16-42. TRANSFER POWER TAKEOFF MAINTENANCE INDEX

PARA. NO.	TITLE	PAGE NO.
16-43.	Transfer Power Takeoff Replacement	16-250
16-44.	Transfer Power Takeoff Repair (M816)	16-254
16-45.	Transfer Power Takeoff Repair (M815, M819)	16-260

16-43. TRANSFER POWER TAKEOFF REPLACEMENT

THIS TASK COVERS:

a. Removal b. Installation

INITIAL SETUP

APPLICABLE MODELS
M815, M816, M819

TOOK
General mechanic's tool kit (Appendix B, Item 1)
Torque wrench, 3/8-in. dr. (Appendix B, Item 4)

MATERIALS/PARTS
Four lockwashers (Appendix D, Item 247)
Two lockwashers (Appendix D, Item 239)
Lockwasher (Appendix D, Item 223)
Gasket (Appendix D, Item 141)
Cotter pin (Appendix D, Item 48)
Safety wire (Appendix D, Item 375)
Antiseize tape (Appendix C, Item 50)

REFERENCES (TM)
LO 9-2320-260-12
TM 9-2320-260-20
TM 9-2320-260-34P-2

EQUIPMENT CONDITION
- Transfer PTO propeller shaft disconnected (TM 9-2320-260-20).
- Parking brakedrum removed (TM 9-2320-260-20).
- Transfer oil drained (LO 9-2320-260-12).

a. Removal

NOTE

Perform step 1 for M815 and M819 vehicles

1. Remove cotter pin (23), pin (24), and link rod (22) from power takeoff shift lever (21). Discard cotter pin (23).
2. Remove screw (17), lockwasher (18), clamp (19), and tube (14) from bracket (13). Discard lockwasher (18).
3. Remove clamp (19) and grommet (15) from tube (14).
4. Disconnect tube (14) from adapter (7) and elbow (20).
5. Remove elbow (20) from transfer (1).
6. Remove two sleeve seals (16) from tube (14).
7. Remove two nuts (9), lockwashers (8), four screws (11), lockwashers (12), power takeoff (10), and gasket (6) from transfer (l). Discard gasket (6) and lockwashers (8) and (12).

16-43. TRANSFER POWER TAKEOFF REPLACEMENT (Contd

NOTE

Perform steps 8 and 9 for M815 and M819 vehicles.

8. Remove safety wire (5) from setscrew (4) and coupling (3). Discard safety wire (5).
9. Remove setscrew (4) and coupling (3) from shaft (2).

NOTE

Perform step 10 for M816 vehicles.

10. Remove coupling (25) from shaft (2).

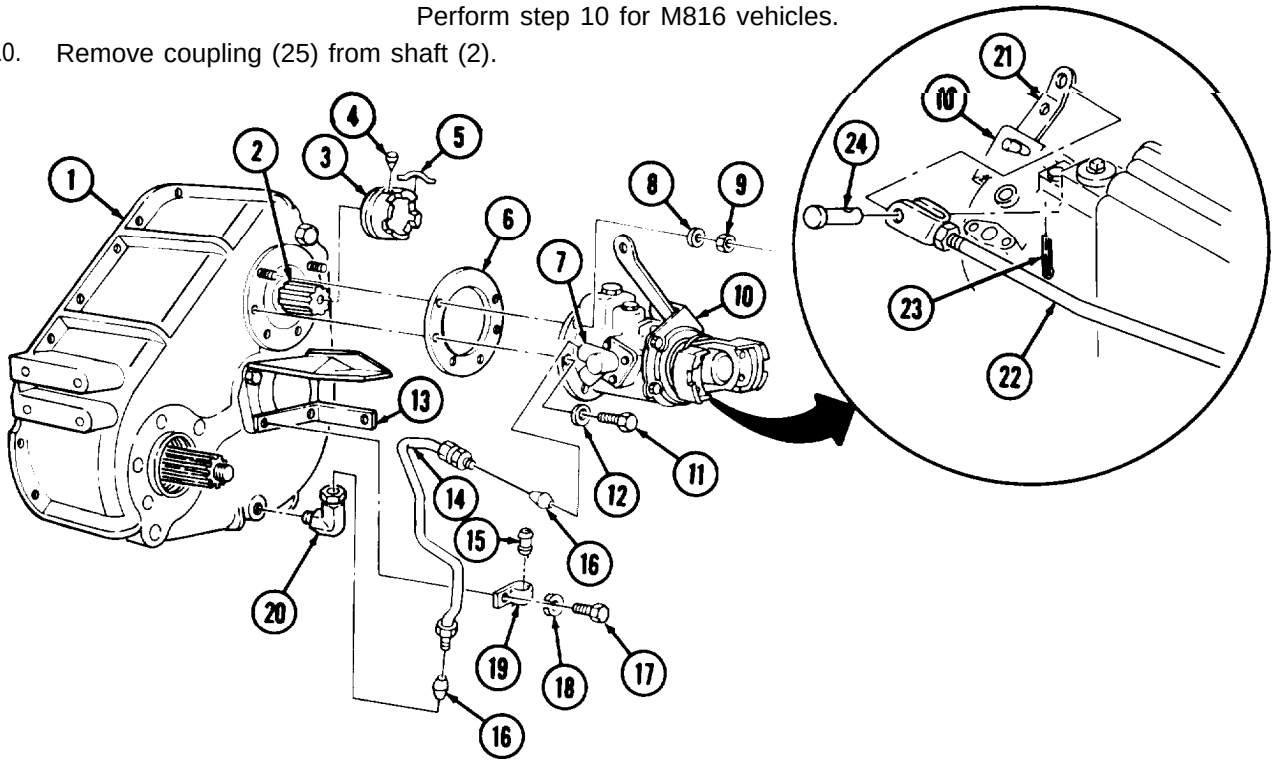

M815, M819

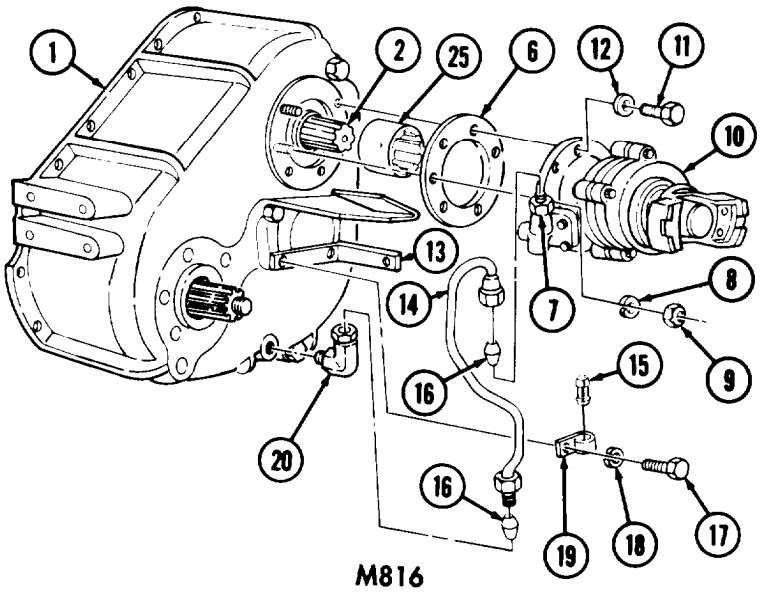

M816

16-43. TRANSFER POWER TAKEOFF REPLACEMENT (Contd)

b. Installation

NOTE

- Perform step 1 for M816 vehicles.
- Perform steps 2 and 3 for M815 and M819 vehicles.

1. Install coupling (3) on shaft (2).
2. Aline setscrew holes of shaft (2) and coupling (21) and install coupling (21) on shaft (2) with setscrew (19).
3. Thread new safety wire (20) through setscrew (19), wrap ends around coupling (21), twist ends together, trim excess safety wire (20), and bend remaining safety wire (20) around coupling (21).
4. Install new gasket (4) and power takeoff (7) on transfer (1) with four new lockwashers (5), screws (6), two new lockwashers (9), and nuts (8). Tighten nuts (8) 30-40 lb-ft (41-54 N·m). Tighten screws (6) 40-55 lb-ft (54-75 N·m).

NOTE

Wrap male threads with antiseize tape before installation.

5. Install elbow (18) on transfer (1).
6. Install two sleeve seals (15) in tube (16).
7. Connect tube (16) to elbow (18) and adapter (10).
8. Install grommet (11) and clamp (14) on tube (16).
9. Install tube (16) and clamp (14) on bracket (17) with new lockwasher (13) and screw (12). Tighten screw (12) 40-55 lb-ft (54-75 N·m).

NOTE

Perform step 10 for M815 and M819 vehicles.

10. Install link rod (23) on power takeoff shift lever (22) with pin (25) and new cotter pin (24).

16-43. TRANSFER POWER TAKEOFF REPLACEMENT (Contd)

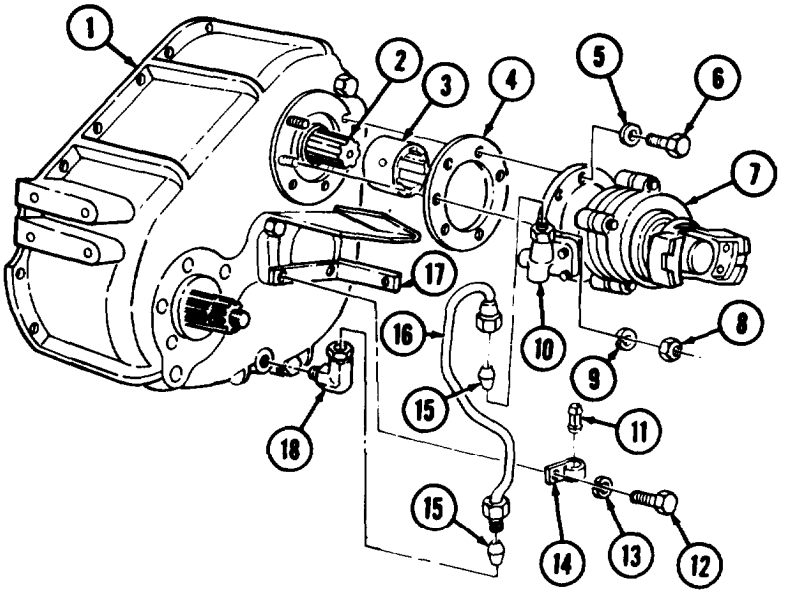

M816

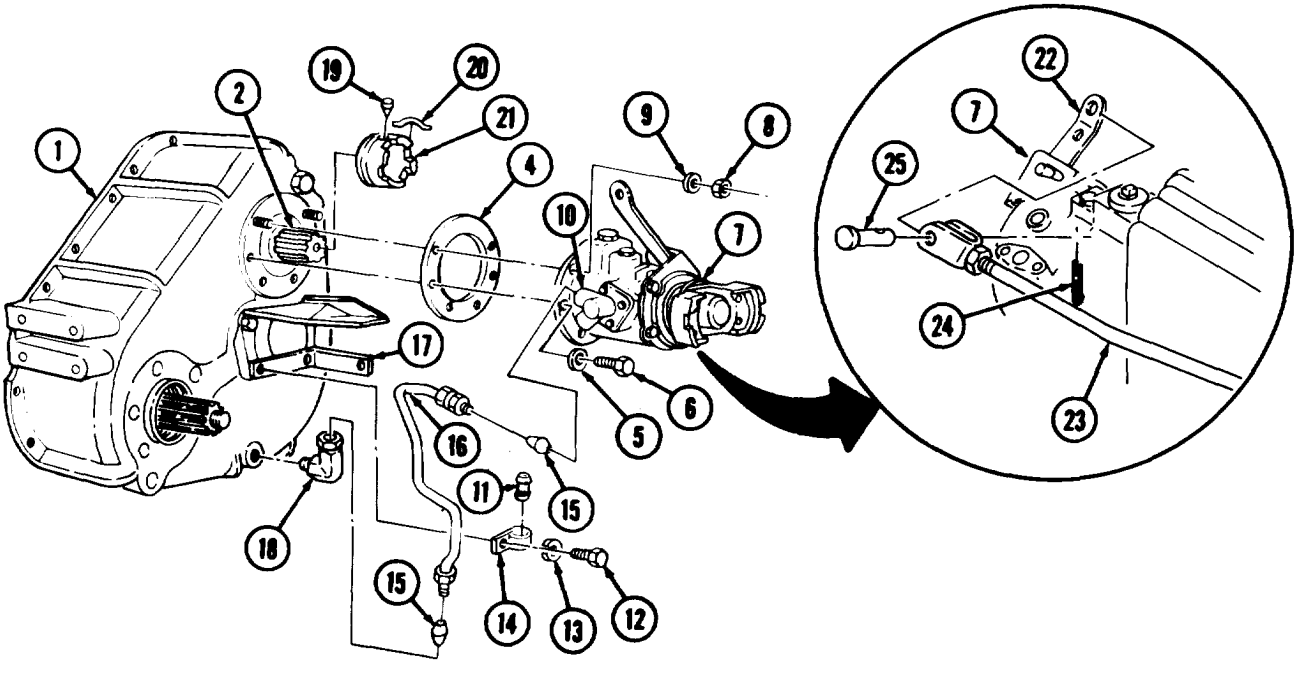

M815, M819

FOLLOW-ON TASKS:
- Install parking brakedrum (TM 9-2320-260-20).
- Install transfer PTO propeller shaft (TM 9-2320-260-20).
- Fill transfer to proper oil level (LO 9-2320-260-12).

16-44. TRANSFER POWER TAKEOFF REPAIR (M816)

THIS TASK COVERS:

a. Disassembly
b. Cleaning and Inspection
c. Assembly

INITIAL SETUP

APPLICABLE MODELS
M816

TOOLS
General mechanic's tool kit (Appendix B, Item 1)
Inside micrometer (Appendix B, Item 9)
Outside micrometer (Appendix B, Item 8)
Spring tester (Appendix B, Item 10)
Torque wrench, 3/8-in. dr. (Appendix B, Item 4)
Torque wrench, 1/2-in. dr. (Appendix B, Item 3)
Torque wrench, 3/4-in. dr. (Appendix B, Item 2)
Mechanical puller kit (Appendix B, Item 14)
Arbor press (Appendix B, Item 7)
Vise (Appendix B, Item 38)

MATERIALS/PARTS
Four lockwashers (Appendix D, Item 247)
Four lockwashers (Appendix D, Item 215)
Gasket (Appendix D, Item 116)
Gasket (Appendix D, Item 118)
Cotter pin (Appendix D, Item 42)
Seal (Appendix D, Item 451)
Two check valves (Appendix D, Item 13)
GAA grease (Appendix C, Item 14)
Sealing compound (Appendix C, Item 45)
Lubricating oil (Appendix C, Item 21)

REFERENCES (TM)
TM 9-2320-260-34P-2

EQUIPMENT CONDITION
Transfer power takeoff removed (para. 16-43).

a. Disassembly

1. Position housing (1) in soft-jawed vise.
2. Remove cotter pin (5), nut (6), and washer (4) from yoke (3) and shaft (2). Discard cotter pin (5).
3. Using puller, remove yoke (3) from shaft (2).
4. Remove housing (1) from vise.
5. Remove four screws (7), lockwashers (8), oil pump (9), and gasket (10) from housing (1). Discard gasket (10) and lockwashers (8).
6. Remove spring (17) from oil pump housing (18).

NOTE
Mark input bore of housing for installation.

7. Remove bushing (14) and check valve (15) from input bore (16) of oil pump housing (18). Discard check valve (15).
8. Remove plug (11), shim (12), and check valve (13) from plug bore (19) of oil pump housing (18). Discard check valve (13).
9. Remove four screws (21), lockwashers (20), cap (23), and gasket (24) from housing (1). Discard gasket (24) and lockwashers (20).
10. Remove seal (22) from cap (23). Discard seal (22).
11. Push in oil pump plunger (26) and rotate shaft (2) until oil pump plunger (26) falls from shaft (2).
12. Using arbor press, remove shaft (2) from bearing (27) and housing (1).
13. Remove snapring (25) from shaft (2).
14. Remove oil pump plunger (26) from housing (1).
15. Using puller, remove bearing (27) from housing (1).

16-44. TRANSFER POWER TAKEOFF REPAIR (M816) (Contd)

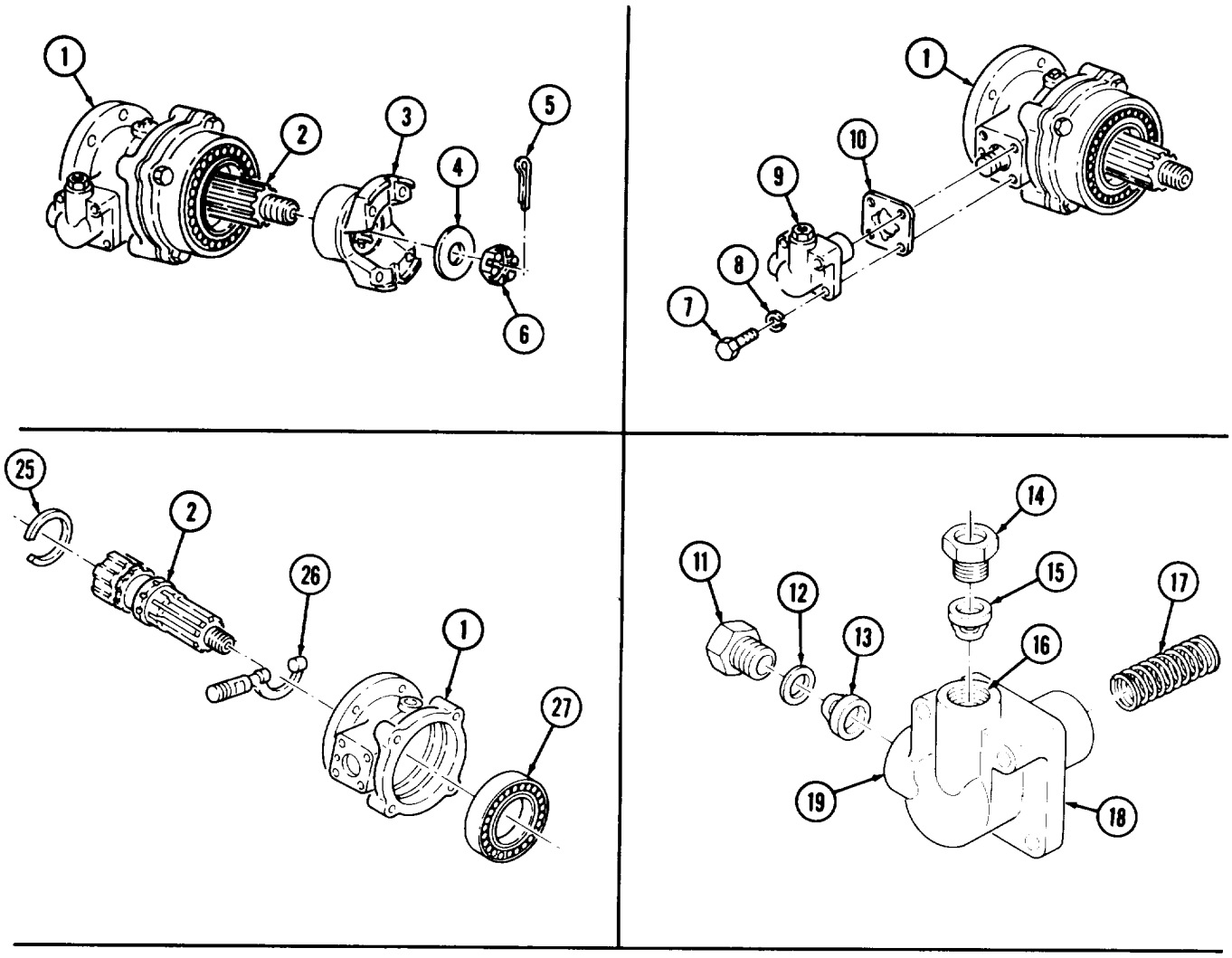

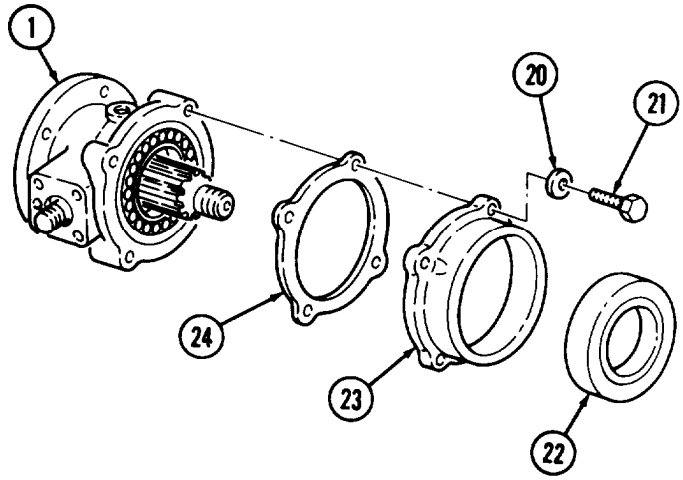

16-44. TRANSFER POWER TAKEOFF REPAIR (M816) (Contd)

b. Cleaning and Inspection

1. For general cleaning instructions, refer to para. 2-8.
2. For general inspection instructions, refer to para. 2-9.
3. Inspect housing (1) for breaks, cracks, burrs, wear, and damaged threads. Refer to table 16-19, Transfer Power Takeoff (M816) Wear Limits, for measurements. Replace or repair housing (1) if damaged or worn.
4. Inspect shaft (2) for breaks, cracks, burrs, chips, and wear. Refer to table 16-19, Transfer Power Takeoff (M816) Wear Limits, for measurements. Replace shaft (2) if damaged or worn.
5. Inspect oil pump plunger (3) for cracks, breaks, burrs, scores, and wear. Refer to table 16-19, Transfer Power Takeoff (M816) Wear Limits, for measurements. Replace oil pump plunger (3) if damaged or worn.
6. Inspect oil pump housing **(4)** for cracks, breaks, scores, and damaged threads. Replace oil pump housing (4) if cracked, broken, scored, or threads are damaged.
7. Inspect yoke (5) for breaks, cracks, corrosion, scores, wear, and damaged threads. Refer to table 16-19, Transfer Power Takeoff (M816) Wear Limits, for measurements. Replace or repair yoke (5) if damaged or worn.
8. Inspect bearing (6) for wear. Refer to table 16-19, Transfer Power Takeoff (M816) Wear Limits, for measurements. Replace bearing (6) if worn.
9. Inspect spring (7) for broken and distorted coils. Using spring tester, check spring tension. Refer to table 16-19, Transfer Power Takeoff (M816) Wear Limits, for measurements. Replace spring (7) if damaged or worn.

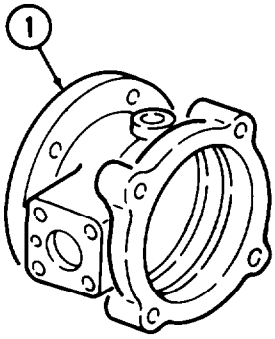

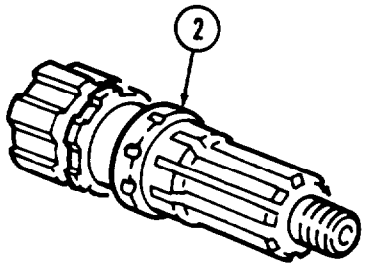

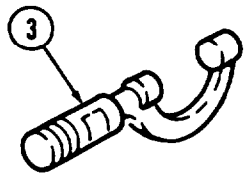

16-44. TRANSFER POWER TAKEOFF REPAIR (M816) (Contd)

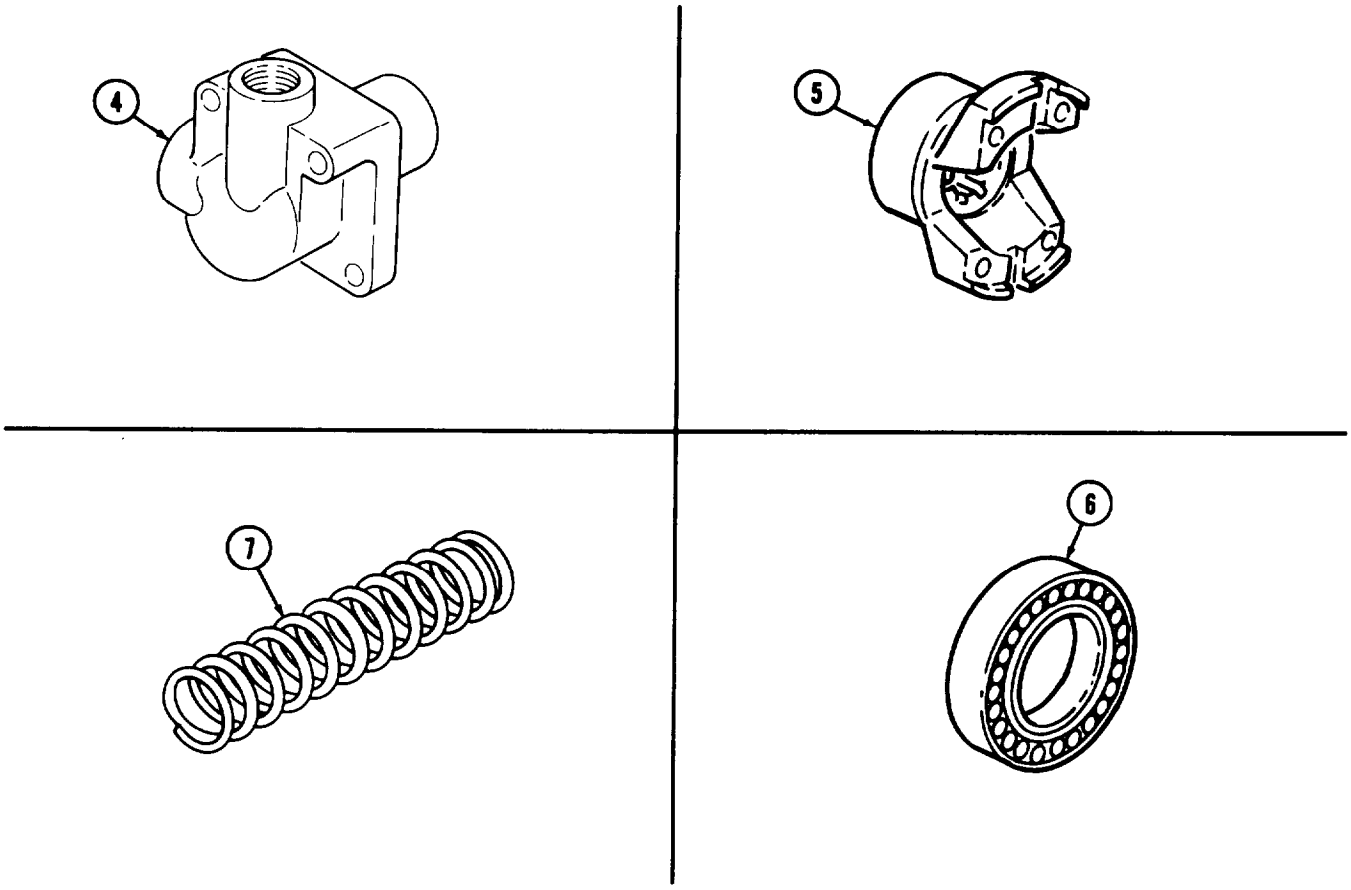

Table 16-19. Transfer Power Takeoff (M816) Wear Limits.

ITEM NO.	ITEM/POINT OF MEASUREMENT	WEAR LIMITS/TOLERANCES	
		INCHES	MILLIMETERS
1	Housing – inside diameter of bearing bore – maximum	3.5431	89.9947
2	Shaft		
	Outside diameter of bearing journal	1.5747	39.997
	Outside diameter of cam surface	1.623	41.22
3	Plunger		
	Outside diameter - minimum	0.7485	19.012
	Pad clearance - minimum	1.624	41.25
5	Yoke - outside diameter – minimum	2.250	57.15
6	Bearing		
	Outside diameter – minimum	1.5748	40.000
	Inside diameter – maximum	3.5427	89.985
7	Spring		
	Free length	2.33	59.2
	Compressed length with 19 lb (8.6 kg)	1.734	44.04

16-44. TRANSFER POWER TAKEOFF REPAIR (M816) (Contd)

c. Assembly

NOTE

Coat all internal parts with light coat of gear oil prior to assembly.

1. Position plunger (6) in housing (7) with plunger shaft (11) projecting through bore (10).
2. Place shaft (2) in housing (7) and position plunger caroming lugs (5) over cam (12) on shaft (2).
3. Using arbor press, install bearing (9) on shaft (2) with sealed side of bearing (9) toward threaded end of shaft (2). Seat, bearing (9) on shaft (2) to shoulder (4).
4. Using arbor press, install shaft (2) with bearing (9) in housing (7). Ensure bearing (9) seats flush with housing bore (8).
5. Install new seal (15) in cap (16).
6. Install new gasket (17) and cap (16) over shaft (2) and housing (7) with four new lockwashers (13) and screws (14). Tighten screws (14) 38-49 lb-ft (52-66 N·m).
7. Coat bases of new check valves (20) and (22) with sealing compound and position in plug bore (26) and input plug (23) of oil pump housing (25). Ensure small end of check valves (20) and (22) point in direction shown.
8. Stake check valves (20) and (22) at three points approximately 120° apart in plug bore (26) and input bore (23) of oil pump housing (25).
9. Install shim (19) and plug (18) in plug bore (26) of oil pump housing (25).
10. Install bushing (21) in input bore (23) of oil pump housing (25).
11. Place spring (24) in oil pump housing (25).
12. Install new gasket (30) and oil pump housing (29) on housing (7) with four new lockwashers (28) and screws (27). Tighten screws (27) 22-28 lb-ft (30-38 N·m).
13. Place housing (7) in soft-jawed vise.
14. Coat lip of seal (15) with GAA grease and aline yoke (31) splines with splines on shaft (2).
15. Install yoke (31) on shaft (2) with washer (32) and nut (34). Tighten nut (34) 100-200 lb-ft (136-271 N·m). Aline one slot in nut (34) with cotter pin hole in shaft (2).
16. Install new cotter pin (33) in shaft (2) and nut (34).
17. Install snapring (1) in groove (3) on shaft (2).
18. Remove housing (7) from vise.

16-44. TRANSFER POWER TAKEOFF REPAIR (M816) (Contd)

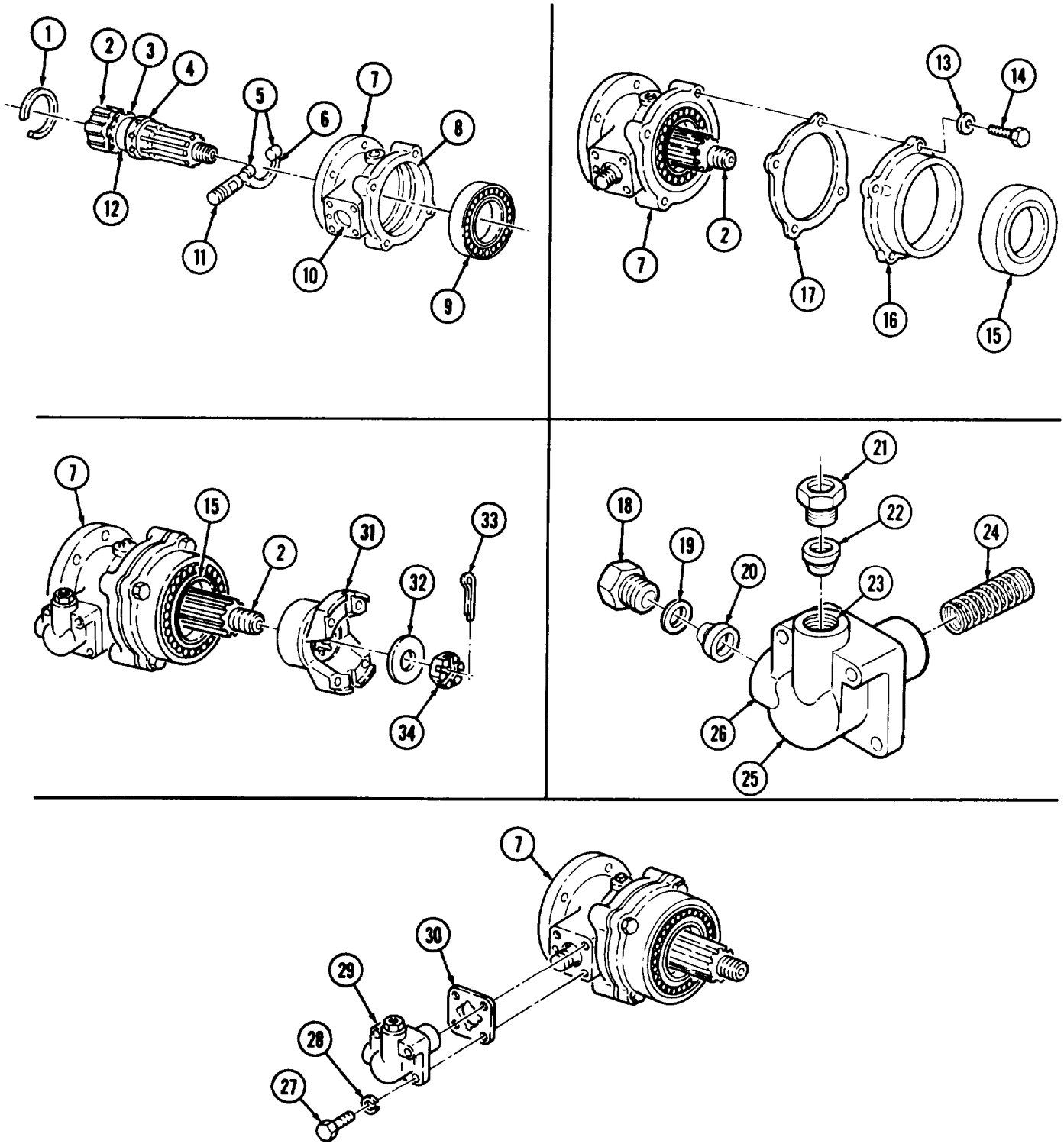

FOLLOW-ON TASK: Install transfer power takeoff (para.16-43).

16-45. TRANSFER POWER TAKEOFF REPAIR (M815, M819)

THIS TASK COVERS:

a. Disassembly
b. Cleaning and Inspection
c. Assembly

INITIAL SETUP

APPLICABLE MODELS
M815, M819

TOOLS
General mechanic's tool kit (Appendix B, Item 1)
Mechanical puller kit (Appendix B, Item 14)
Spring tester (Appendix B, Item 10)
Torque wrench, 3/8-in. dr. (Appendix B, Item 4)
Torque wrench, 1/2-in. dr. (Appendix B, Item 3)
Torque wrench, 3/4-in. dr. (Appendix B, Item 2)
1-1/2-in. socket, 3/4-in. dr. (Appendix B, Item 118)
Inside micrometer (Appendix B, Item 9)
Outside micrometer (Appendix B, Item 8)
Feeler gage (Appendix B, Item 58)
Arbor press (Appendix B, Item 7)
Vise (Appendix B, Item 38)

MATERIALS/PARTS
Eleven lockwashers (Appendix D, Item 247)
Two check valves (Appendix D, Item 13)
Two cotter pins (Appendix D, Item 48)
Cotter pin (Appendix D, Item 42)
Seal (Appendix D, Item 470)
Seal (Appendix D, Item 415)
Shim (Appendix D, Item 498)
Shim (Appendix D, Item 497)
Shim (Appendix D, Item 496)
Gasket (Appendix D, Item 116)
Gasket (Appendix D, Item 122)
Woodruff key (Appendix D, Item 567)
Woodruff key (Appendix D, Item 568)
Lubricating oil (Appendix C, Item 21)
Sealing compound (Appendix C, Item 45)

REFERENCES (TM)
TM 9-2320-260-34P-2

EQUIPMENT CONDITION
Transfer power takeoff removed (para.16-43).

a. Disassembly

1. Place housing (6) in vise.
2. Remove cotter pin (4), nut (5), and washer (3) from yoke (2) and shaft (1). Discard cotter pin (4).
3. Using puller, remove yoke (2) from shaft (1).
4. Remove housing (6) from vise.
5. Remove two cotter pins (10), nut (9), two washers (8), and lever (11) from stud (7) and shifter rod (12). Discard cotter pins (10).
6. Remove two screws (15), lockwashers (14), four washers (13), and bracket (16) from cover (17). Discard lockwashers (14).
7. Remove plug (18), lockwasher (19), spring (20), and ball bearing (21) from housing (6). Discard lockwasher (19).
8. Remove four screws (25), lockwashers (24), oil pump (23), and gasket (22) from housing (6). Discard gasket (22) and lockwashers (24).
9. Remove plug (26) from housing (6).
10. Remove setscrew (27) and shifter rod (12) from fork (30) and housing (6).
11. Remove seal (28) from shifter rod (12). Discard seal (28).
12. Remove clutch (29) and fork (30) from housing (6) and shaft (1).

16-45. TRANSFER POWER TAKEOFF REPAIR (M815, M819) (Contd)

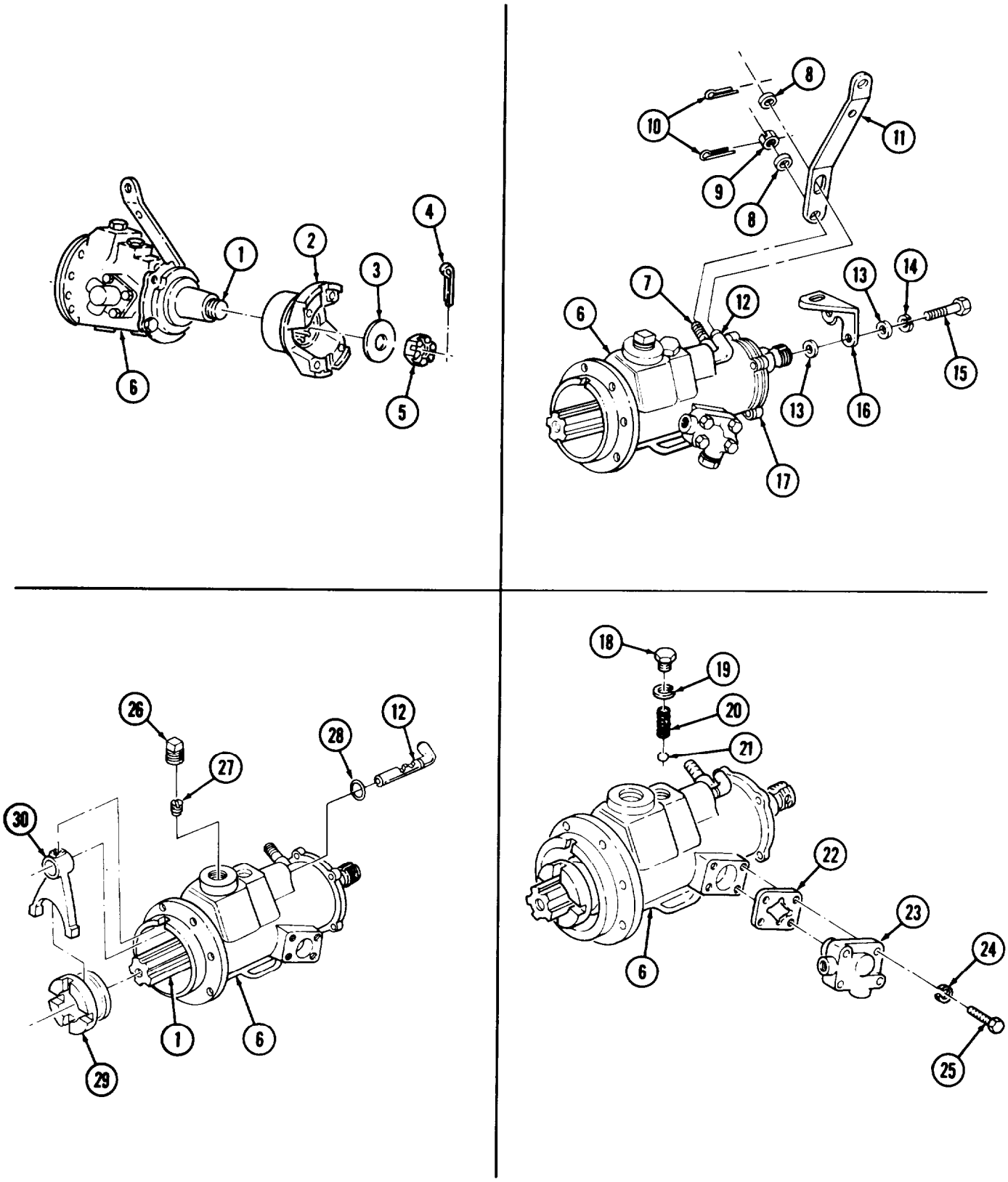

16-45. TRANSFER POWER TAKEOFF REPAIR (M815, M819) (Contd)

13. Remove two lower screws (1), lockwashers (13), and cover (3) from housing (6). Discard lockwashers (13).
14. Remove seal (2) from cover (3). Discard seal (2).
15. Remove shim pack (12) and two gaskets (4) from housing (6) and cover (3). Separate shim pack (12) from gaskets (4). Discard gaskets (4).
16. Remove woodruff key (5) from shaft (11). Discard woodruff key (5).
17. Remove two screws (7), lockwashers (8), governor cover (9), and gasket (10) from housing (6). Discard gasket (10) and lockwashers (8).
18. Remove plunger (18) from housing (6).
19. Position housing (6) on arbor press, small end down, and press shaft (11) with gear (15), bearings (14) and (16), and outer bearing race (17) out of housing (6).
20. Remove race (17) from bearing (16).
21. Using puller, remove bearing (14) from shaft (11).

NOTE

Mark gear for installation.

22. Using arbor press, remove bearing (16) and gear (15) from shaft (11).
23. Remove woodruff key (19) from shaft (11). Discard woodruff key (19).
24. Remove spring (26) from bore (27) of oil pump housing (28).
25. Remove bushing (23) and check valve (24) from input bore (25) of oil pump housing (28). Discard check valve (24).
26. Remove plug (20), shim (21), and check valve (22) from output bore (29) of oil pump housing (28). Discard check valve (22).

b. Cleaning and Inspection

1. For general cleaning instructions, refer to para. 2-8.
2. For general inspection instructions, refer to para. 2-9.
3. Inspect oil pump housing (28) for cracks, breaks, burrs, scoring, and damaged threads. Replace oil pump housing (28) if cracked, broken, burred, scored, or threads are damaged.
4. Inspect spring (26) for broken or distorted coils and a free length of 1.75 in. (44.5 mm). Replace spring (26) if broken or coils are distorted. Using spring tester, check spring length. Spring (26) should be 1.11 in. (28.2 mm) with 40 lb (18.2 kg) applied.

16-45. TRANSFER POWER TAKEOFF REPAIR (M815, M819) (Contd)

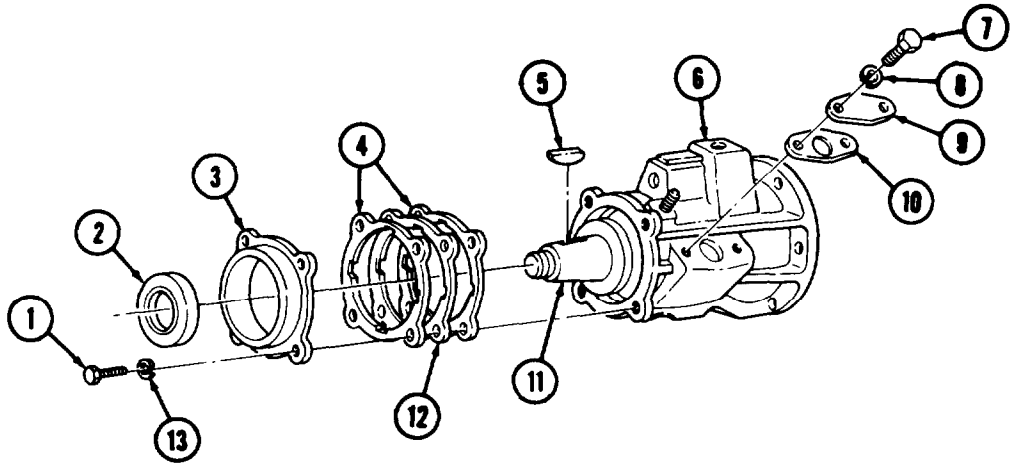

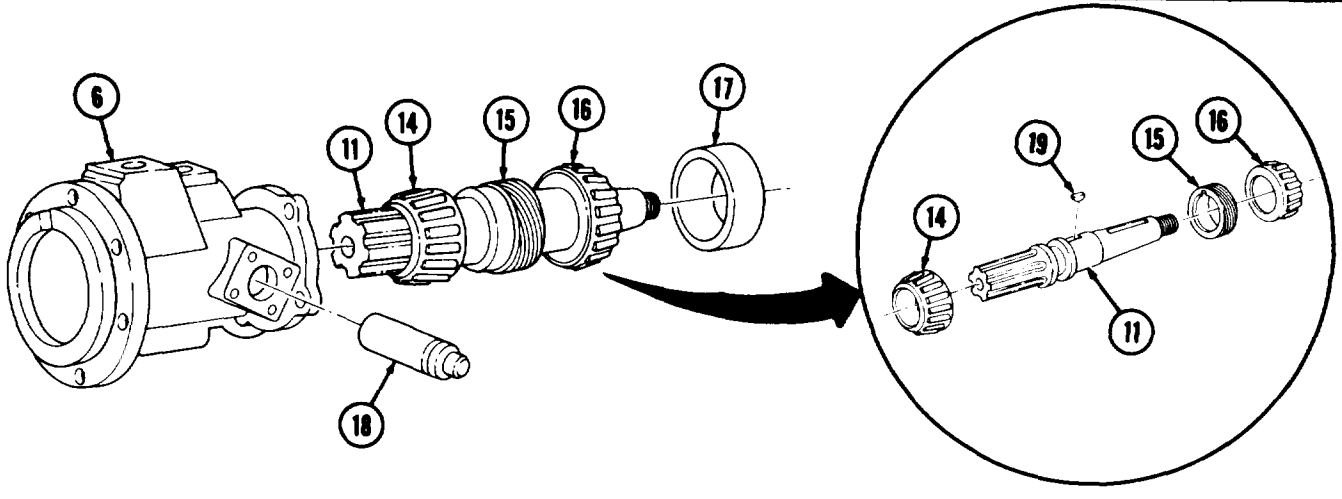

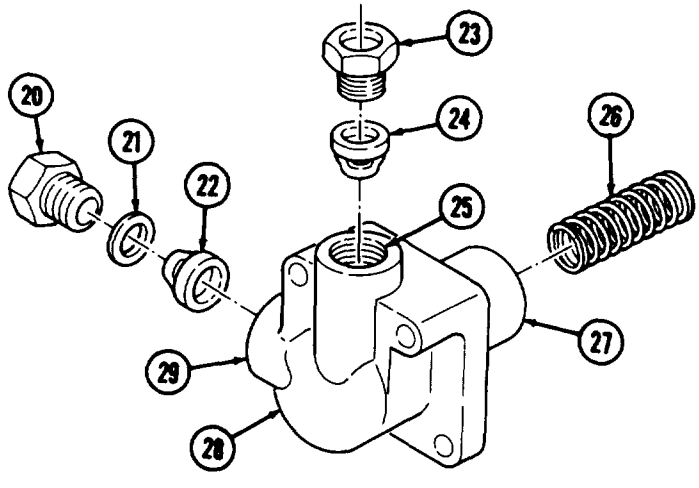

16-45. TRANSFER POWER TAKEOFF REPAIR (M815, M819) (Contd)

5. Inspect housing (1) for cracks, breaks, burrs, scores, and wear, Refer to table 16-20, Transfer Power Takeoff Wear Limits, for measurements. Replace housing (1) if damaged or worn.
6. Inspect inner bearing race (2) for scores, chips, burrs, and wear. Refer to table 16-20, Transfer Power Takeoff Wear Limits, for measurements. Replace inner bearing race (2) if scored, chipped, burred, or worn.

NOTE

Perform steps 7 and 8 if inspection of inner bearing race requires replacement.

7. Using arbor press and adapter, press inner bearing race (2) from housing (1). Discard inner bearing race (2).
8. Using arbor press and adapter, press new inner bearing race (2) in housing (1).
9. Inspect bearings (3) and (4) for wear. Refer to table 16-20, Transfer Power Takeoff Wear Limits, for measurements. Replace bearing (3) or (4) if worn.
10. Inspect outer bearing race (5) for wear. Refer to table 16-20, Transfer Power Takeoff Wear Limits, for measurements. Replace outer bearing race (5) if worn.
11. Inspect shaft (6) for burrs, breaks, cracks, chips, and wear. Refer to Table 16-20, Transfer Power Takeoff Wear Limits, for measurements. Replace shaft (6) if damaged or worn.
12. Inspect clutch (8) and coupling (7) for cracks, breaks, burrs, bends, and damaged threads. Replace clutch (8) or coupling (7) if damaged.
13. Inspect fork (9) for cracks, breaks, wear, or damaged threads. Refer to table 16-20, Transfer Power Takeoff Wear Limits, for measurements. Replace fork (9) if damaged or worn.
14. Inspect shift rod (10) for cracks, breaks, burrs, and wear. Refer to table 16-20, Transfer Power Takeoff Wear Limits, for measurements. Replace shift rod (10) if damaged or worn.
15. Inspect spring (11) for broken and distorted coil. Using spring tester, check spring tension. Refer to table 16-20, Transfer Power Takeoff Wear Limits, for measurements. Replace spring (11) if damaged or worn.
16. Inspect gear (12) for breaks, cracks, chips, and burrs. Replace gear (12) if broken, cracked, chipped, or burred.
17. Inspect yoke (13) for cracks, breaks, chips, and wear. Refer to table 16-20, Transfer Power Takeoff Wear Limits, for measurements. Replace yoke (13) if damaged or worn.

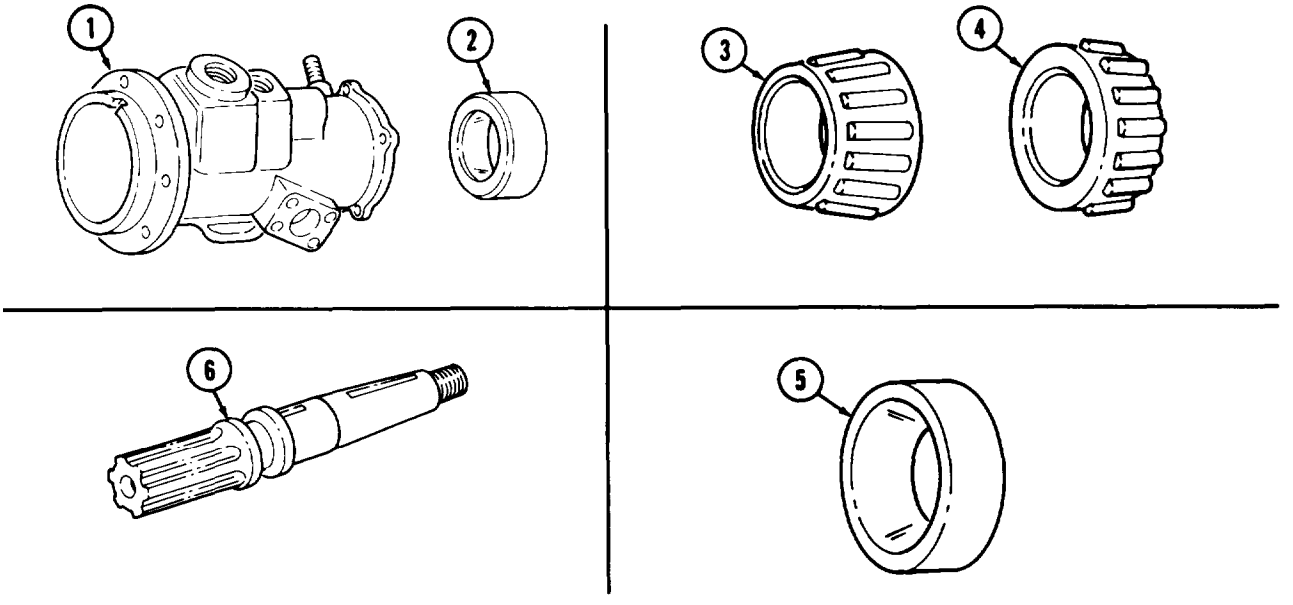

16-45. TRANSFER POWER TAKEOFF REPAIR (M815,M819) (Contd)

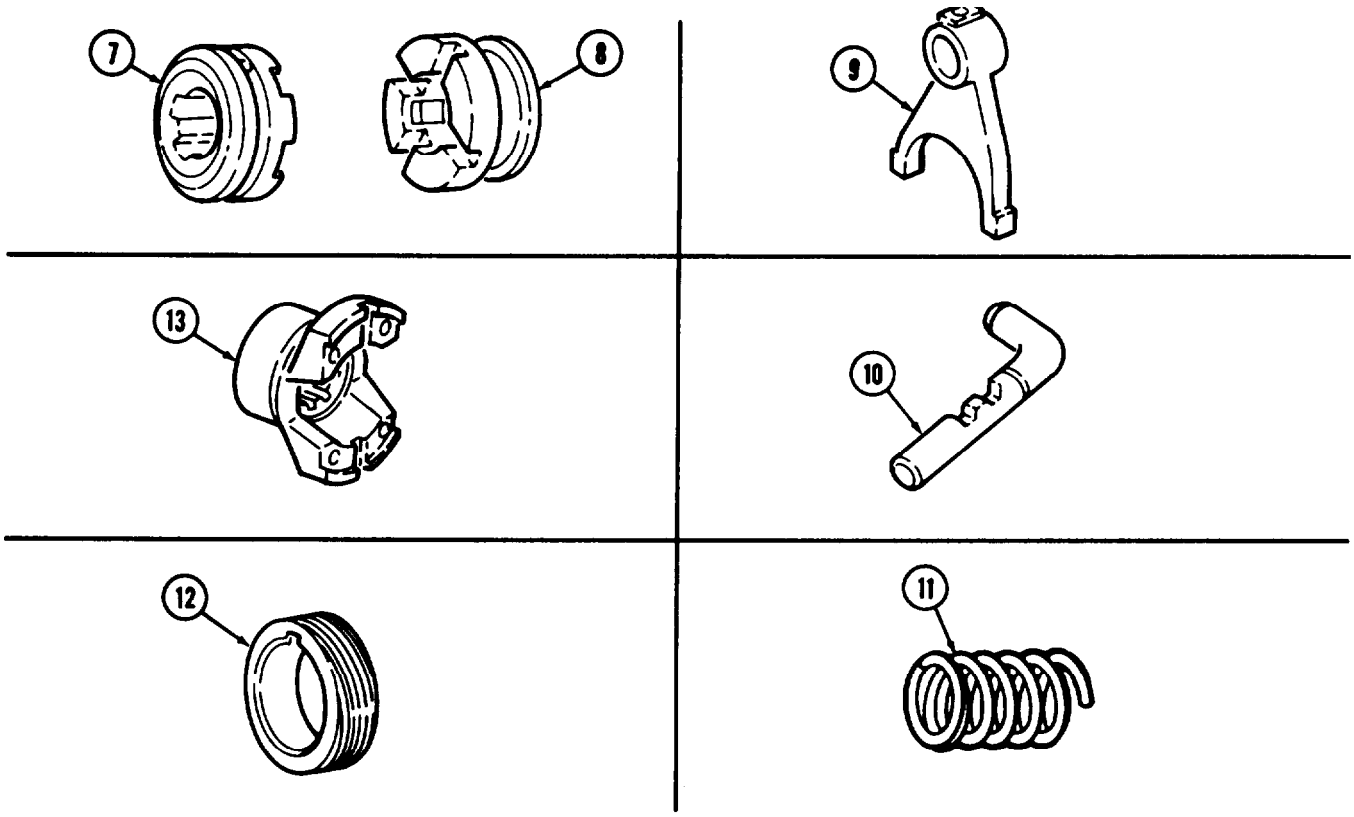

Table 16-20. Transfer Power Takeoff Wear Limits.

ITEM NO.	ITEM/POINT OF MEASUREMENT	WEAR LIMITS/TOLERANCES	
		INCHES	MILLIMETERS
1	Housing		
	Inner diameter - inner bearing bore – maximum	3.1486	79.974
	Inner diameter – outer bearing bore – maximum	3.1506	80.025
	Bearings		
3,4	Inner diameter - maximum	1.6885	42.888
2,5	Outer diameter - minimum	3.1496	80.000
6	Shaft		
	Outer diameter - bearing journal - minimum	1.498	38.05
	Outer diameter - cam surface - minimum	1.685	42.80
	Outer diameter - seal surface - minimum	1.498	38.05
9	Fork		
	Inner diameter - shaft bore - maximum	0.5005	12.713
	Pad width - minimum	0.395	10.03
10	Shift rod - outer diameter - minimum	0.498	12.65
11	Spring		
	Free length - minimum	0.53	13.5
	Compressed length with 25 lb (11.3 kg)	0.42	10.7
13	Yoke - outside diameter - minimum	2.250	57.15

16-45. TRANSFER POWER TAKEOFF REPAIR (M815, M819) (Contd)

c. Assembly

NOTE

Coat all internal parts with-gear oil prior to assembly.

1. Install new woodruff key (7) in shaft (2).
2. Using arbor press, install gear (4) and bearing (5) on shaft (2).
3. Using arbor press, install bearing (3) on shaft (2).
4. Place shaft (2) with bearings (3) and (5) and gear (4) in housing (1).
5. Using hammer and brass drift, install outer race (6) in housing (1) overbearing (5).
6. Install cover (8) on housing (1) with four screws (9). Finger tighten screws (9) to ensure cover (8) is positioned evenly.
7. While turning shaft (2), tighten screws (9) until a slight drag is felt. Drag indicates there is zero end play.
8. Using feeler gage, measure distance “d” between cover (8) and housing (1). Measure at three points approximately 120° apart. If measurements “d” vary by more than 0.003 in. (0.08 mm), loosen screws (9) and repeat steps 7 and 8.
9. Record measurement “d.”
10. Remove four screws (9) and cover (8) from housing (1).

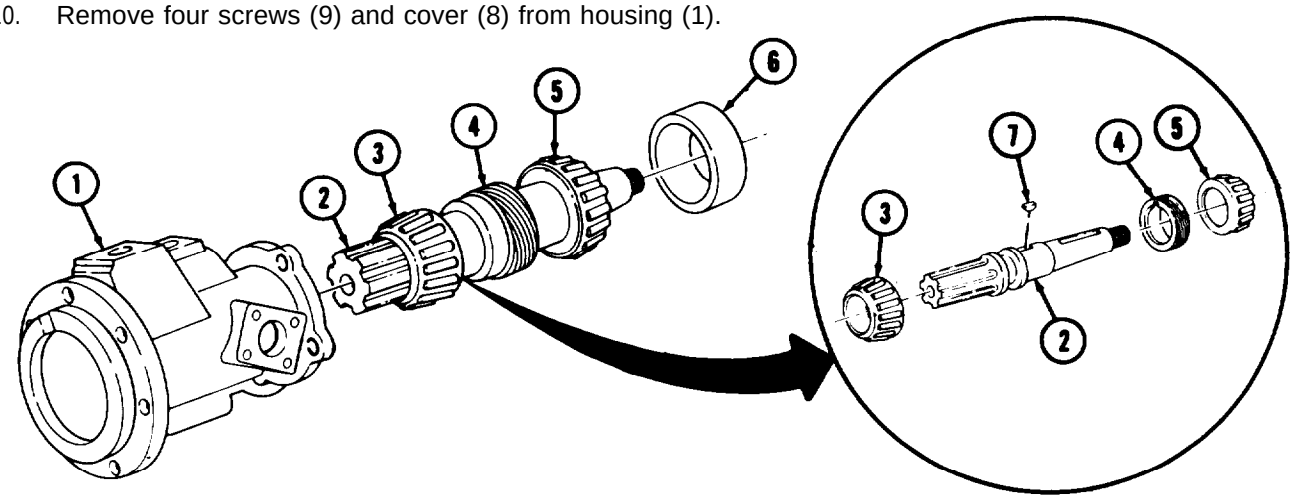

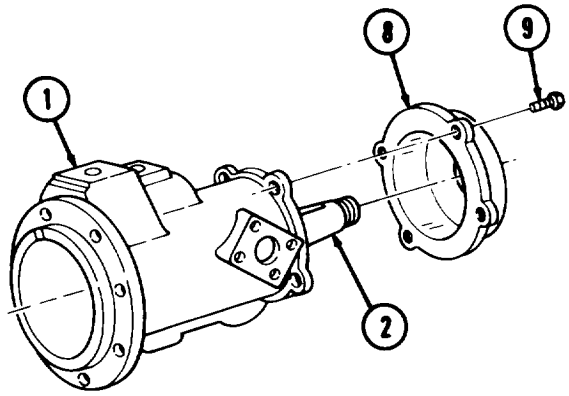

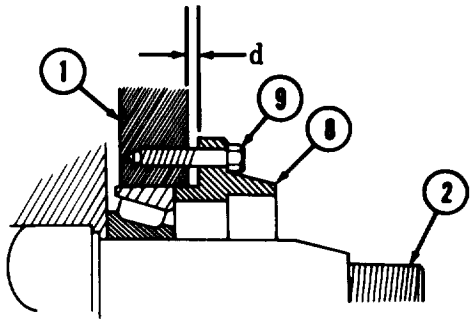

16-45. TRANSFER POWER TAKEOFF REPAIR (M815, M819) (Contd)

11. Using arbor press, install new seal (10) in cover (8).
12. Assemble shim pack (17) equal to thickness recorded in step 9 plus 0.002-0.005 in. (0.05-0.13 mm).
13. Position two new gaskets (11), shim pack (17), and cover (8) on housing (1) with four new lockwashers (18) and screws (9). Finger tighten screws (9).
14. Install new gasket (16) and governor cover (15) on housing (1) with two new lockwashers (14) and screws (13).
15. Install new woodruff key (12) in shaft (2).
16. Coat new seal (27) with gear oil and place in groove on shifter rod (26).
17. Install shifter rod (26) and seal (27) in housing (1). Carefully work seal (27) into bore.
18. Place fork (19) in housing (1) and on shifter rod (26).
19. Holding fork (19) up, slide clutch (28) on shaft (2) and push clutch (28) in until fork (19) can set in groove on clutch (28).
20. Aline holes in fork (19) and shifter rod (26) and install setscrew (20).
21. Install plug (21) in housing (1).
22. Install ball bearing (25) and spring (24) in housing (1) with new lockwasher (23) and plug (22).

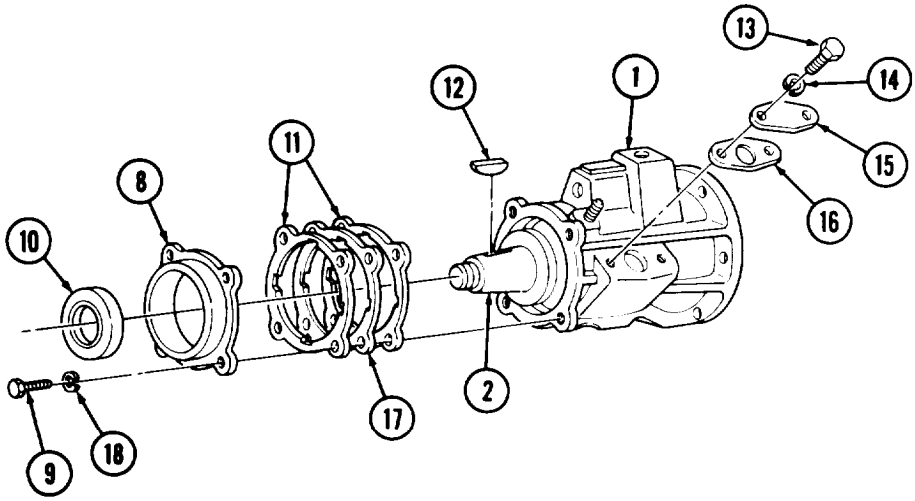

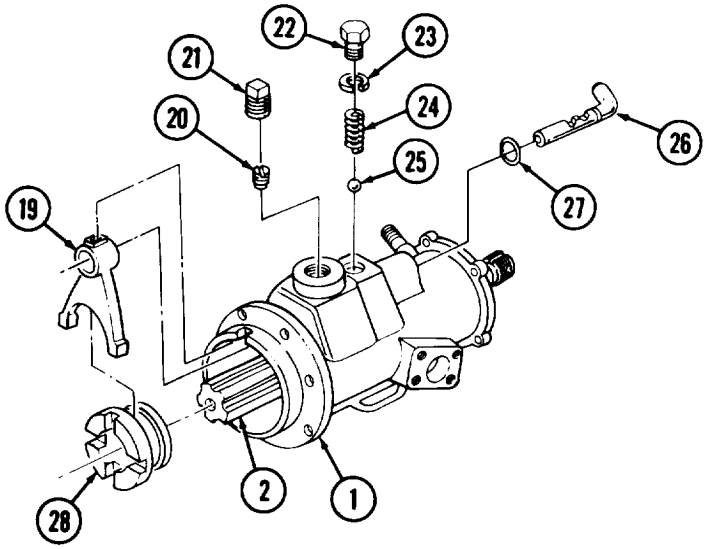

16-45. TRANSFER POWER TAKEOFF REPAIR (M815, M819) (Contd)

NOTE

- Coat outer edges of base of check valves with sealing compound before installation.
- Check valves must be properly oriented to function correctly.

23. Install new check valves (5) in input bore (8) and output bore (4) of oil pump housing (3). Stake each check valve (5) at three places in each bore at approximately 120° spacing. Check valve cap must point in direction of flow.
24. Install shim (7) and plug (6) in output bore (4) of oil pump housing (3).
25, Install bushing (9) in input bore (8) of oil pump housing (3).
26. Place spring (2) and plunger (1) in bore (10) of oil pump housing (3).
27. Install new gasket (11) and oil pump (12) on housing (15) with four new lockwashers (13), and screws (14). Tighten screws (14) 22-28 lb-ft (30-38 N·m).

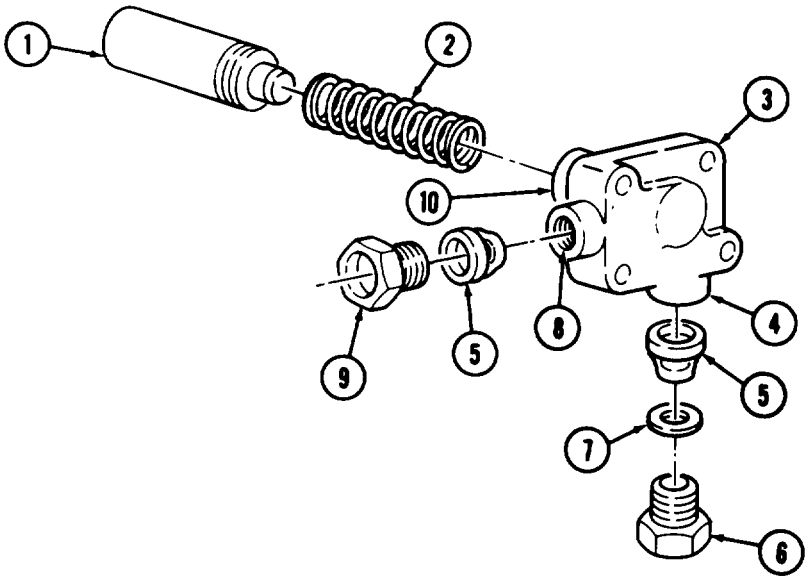

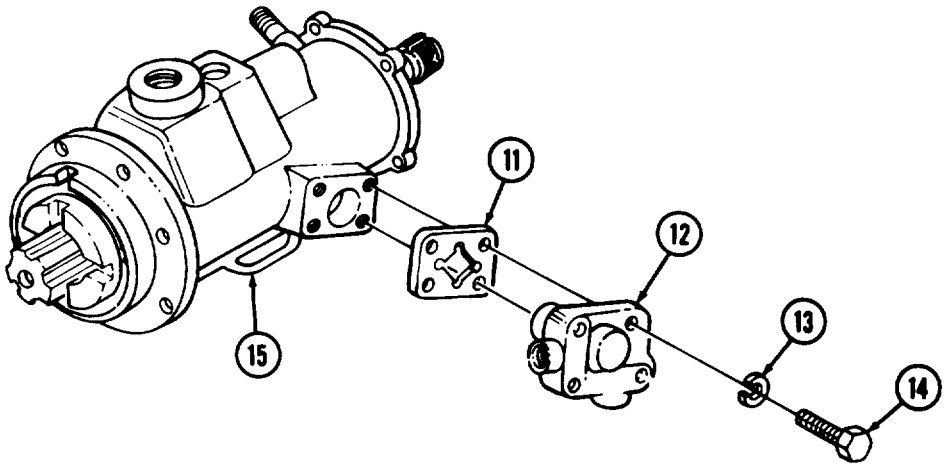

16-45. TRANSFER POWER TAKEOFF REPAIR (M815, M819) (Contd)

28. Remove two upper screws (22) and lockwashers (21) from cover (24) and housing (15). Do not discard lockwashers (21).
29. Install bracket (23) on cover (24) and housing (15) with four washers (20), two lockwashers (21), and screws (22). Tighten four screws (22) 38-49 lb-ft (52-66 N·m).
30. Position lever (18) on stud (25) and shifter rod (19) and install on stud (25) with washer (26) and nut (28). Ensure lever (18) moves freely and aline slot in nut (28) with hole in stud (25). Tighten nut (28) 65-130 lb-ft (88-176 N·m).
31. Install new cotter pin (27) in nut (28) and stud (25).
32. Place washer (17), over end of shifter rod (19) and install new cotter pin (16) in end of shifter rod (19). Ensure shifter rod (19) moves freely.
33. Place housing (15) in vise.
34. Install yoke (30) on shaft (29) with washer (31) and nut (33). Tighten nut (33) 175-350 lb-ft (237-475 N·m) alining slot in nut (33) with hole in shaft (29).
35. Install new cotter pin (32) in nut (33) and shaft (29).
36. Remove housing (15) from vise.

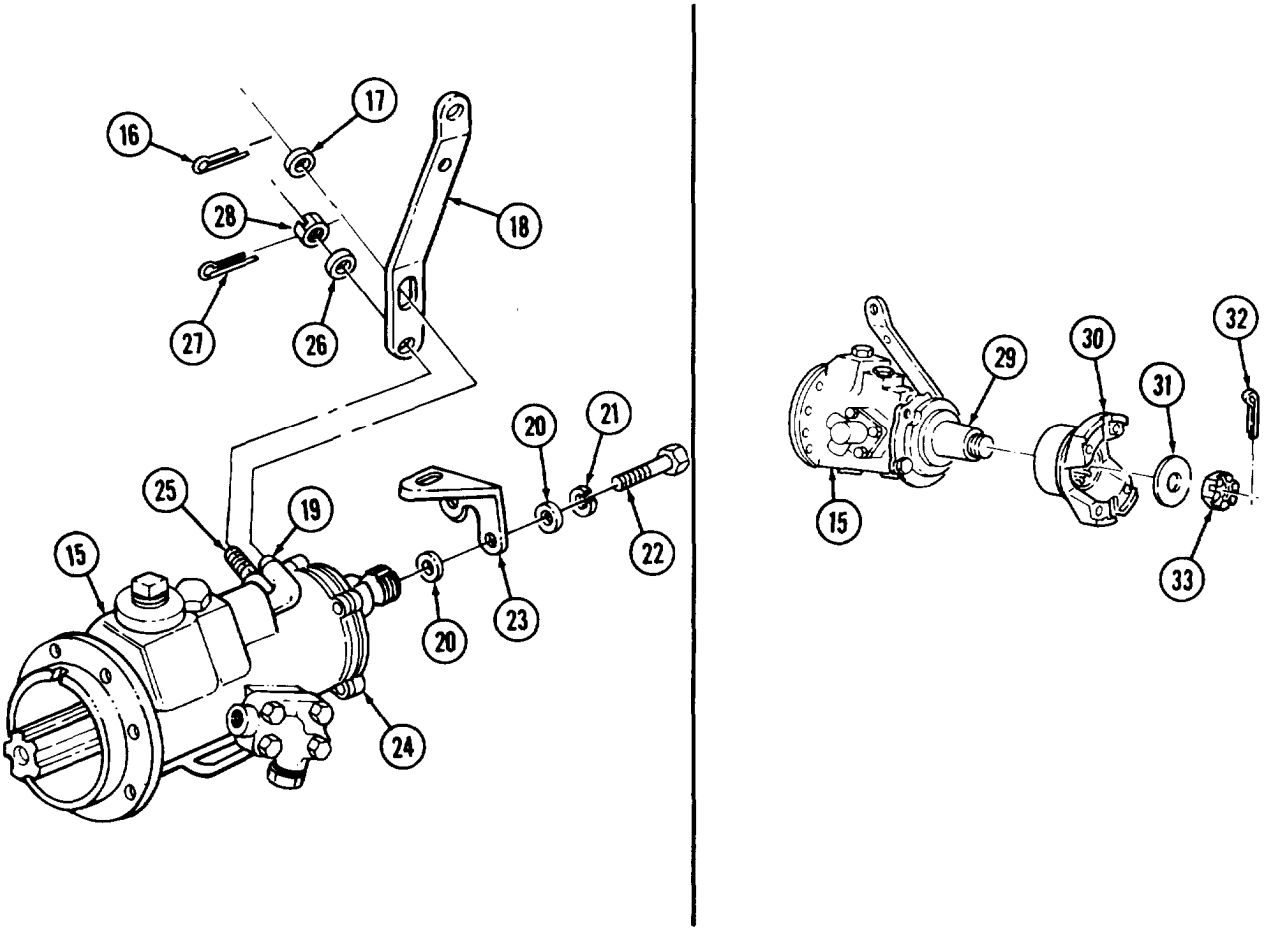

FOLLOW-ON TASK: Install transfer power takeoff (para.15-43).

Section VI. POWER DIVIDER AND DRIVE MAINTENANCE

16-46. POWER DIVIDER AND DRIVE MAINTENANCE INDEX

PARA. NO.	TITLE	PAGE NO.
16-47.	Power Divider and Drive Replacement	16-270
16-48.	Power Divider Repair	16-278
16-49.	Drive Repair	16-296
16-50.	Power Divider Governor Control Valve Replacement	16-299

16-47. POWER DIVIDER AND DRIVE REPLACEMENT

THIS TASK COVERS:

a. Removal

b. Installation

INITIAL SETUP

APPLICABLE MODELS
M816

TOOLS
General mechanic's tool kit (Appendix B, Item 1)
Lifting device
supports

MATERIALS/PARTS
Gasket (Appendix D, Item 102)
Cotter pin (Appendix D, Item 21)
Two locknuts (Appendix D, Item 182)
Two sleeves (Appendix D, Item 511)
Four cotter pins (Appendix D, Item 48)
Six lockwashers (Appendix D, Item 224
Six lockwashers (Appendix D, Item 215)
Antiseize tape (Appendix C, Item 50)

REFERENCES (TM)
LO 9-2320-261-12
TM 9-2320-260-10

REFERENCES (TM) (Contd)
TM 9-2320-260-20
TM 9-2320-260-34P-2

EQUIPMENT CONDITION
- Power divider and drive oil drained (LO 9-2320-260-12).
- Air reservoirs drained (TM 9-2320-260-10).
- Transfer-to-power divider propeller shaft removed (TM 9-2320-260-20).
- Power divider-to-rear winch drive propeller shaft removed (TM 9-2320-260-20).
- Power divider-to-hydraulic pump propeller shaft removed (TM 9-2320-260-20).

GENERAL SAFETY INSTRUCTIONS
- Do not disconnect air lines before draining air reservoirs.
- All personnel must stand clear during lifting operations.
- Ensure lifting capacity is greater than weight of power cylinder.

a. Removal

1. Remove two cotter pins (1), control link (5), and two washers (6) from air valve (9). Discard cotter pins (1).
2. Remove cotter pin (2), straight pin (7), two washers (3), and clevis (4) from control lever (8). Discard cotter pin (2).
3. Remove cotter pin (14), straight pin (15), and control link (17) from control lever (16). Discard cotter pin (14).
4. Remove cotter pin (13), straight pin (11), and control link (10) from control lever (12). Discard cotter pin (13).

16-47. POWER DIVIDER AND DRIVE REPLACEMENT (Contd)

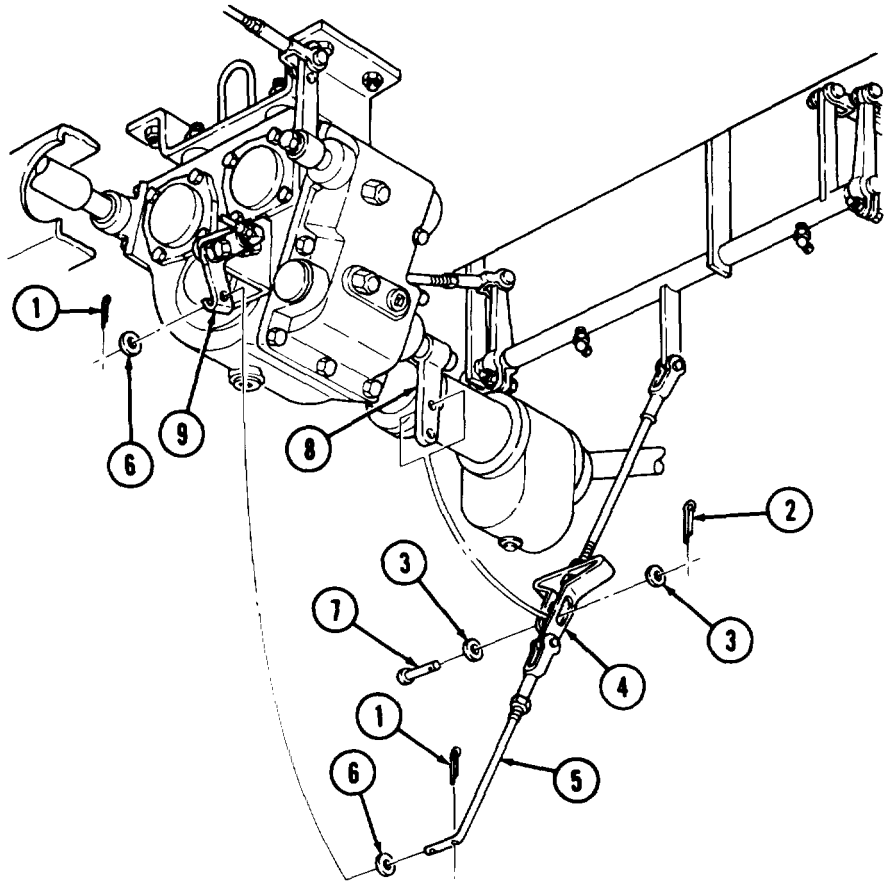

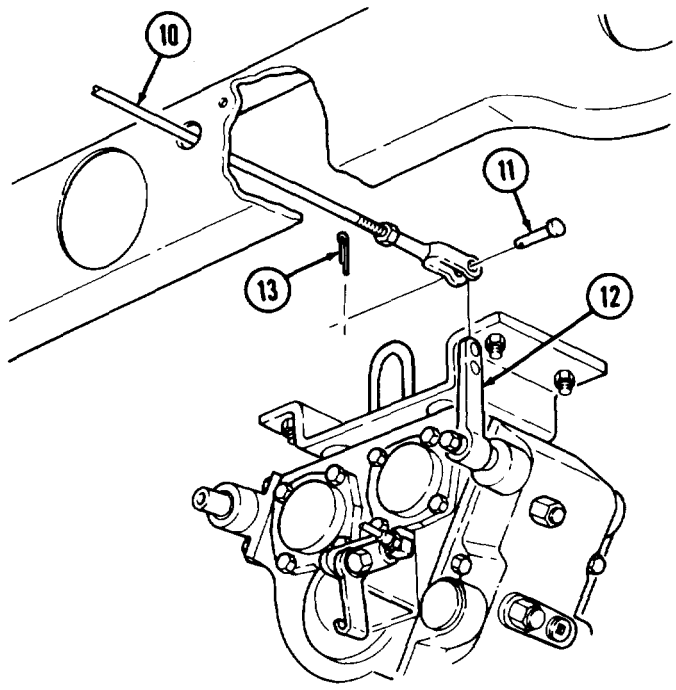

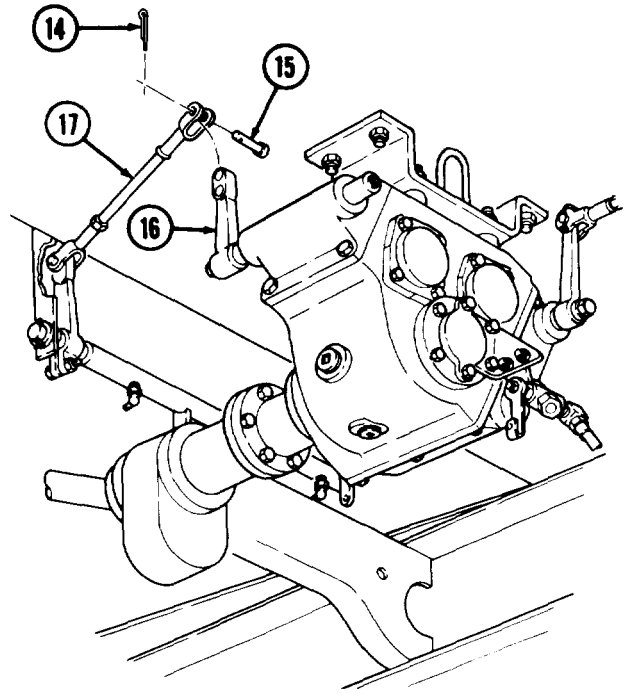

16-47. POWER DIVIDER AND DRIVE REPLACEMENT (Contd)

WARNING

Do not disconnect air lines before draining air reservoirs. Small parts under pressure may shoot out with high velocity, causing injury to personnel.

NOTE

- Tag air lines for installation.
- Perform steps 5 through 9 if replacing power divider.

5. Remove air lines (7) and (8) and two sleeves (6) from elbow (5) and adapter (9). Discard sleeves (6).
6. Remove two locknuts (4), air valve (3), two spacers (2), and screws (1) from bracket (12). Discard locknuts (4).
7. Remove elbow (5) and adapter (9) from air valve (3).
8. Remove two screws (10), lockwashers (11), and bracket (12) from power divider (13). Discard lockwashers (11).
9. Install two new lockwashers (11) and screws (10) on power divider (13).
10. Remove four screws (20), lockwashers (22), and cover (21) from tool box floor (16). Discard lockwashers (22).
11. Attach lifting device to ring (15) of power divider (13).

WARNING

- All personnel must stand clear during lifting operations. A swinging or shifting load may cause injury to personnel.
- Ensure lifting capacity is greater than weight (30 lb (14 kg)) of power divider. Failure to do so may result in injury to personnel or damage to equipment.

NOTE

Assistant will help with steps 12 through 16.

12. Position support under power divider (13).
13. Remove four nuts (19) and screws (14) from bracket (17) and tool box floor (16).
14. Lower power divider (13) and drive (18) on supports and secure with safety strap.
15. Remove lifting device from ring (15) on power divider (13).

16-47. POWER DIVIDER AND DRIVE REPLACEMENT (Contd)

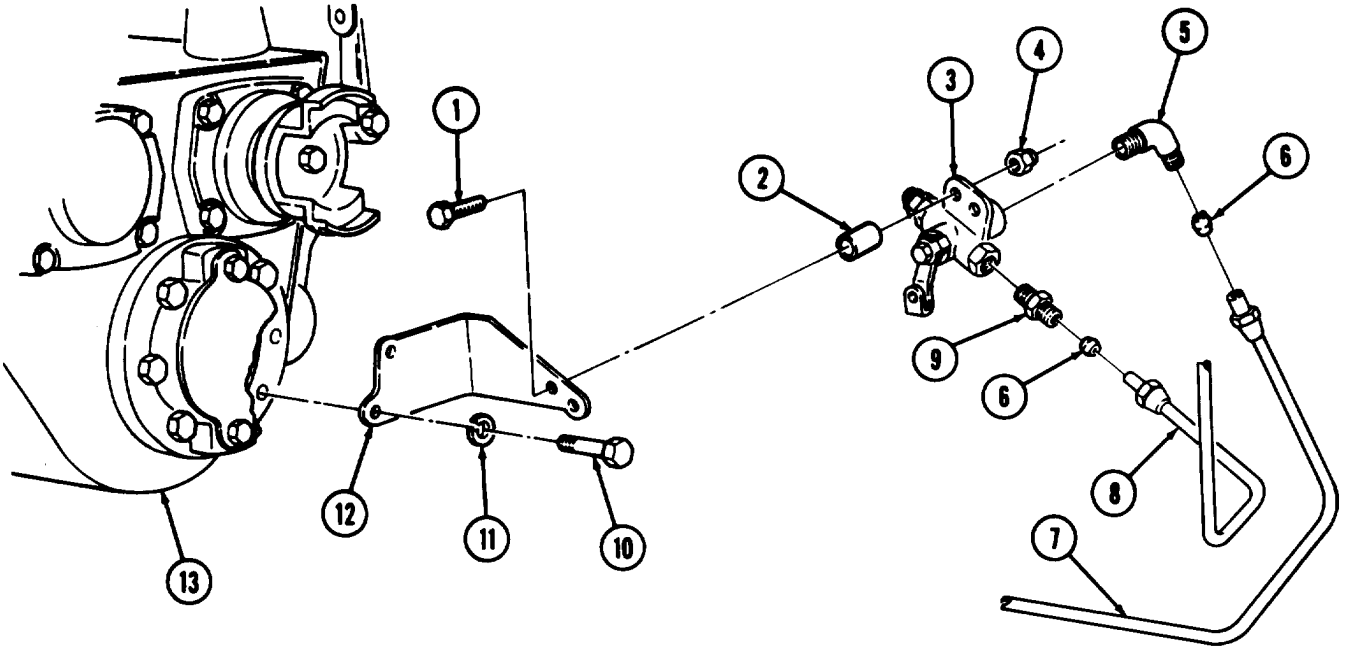

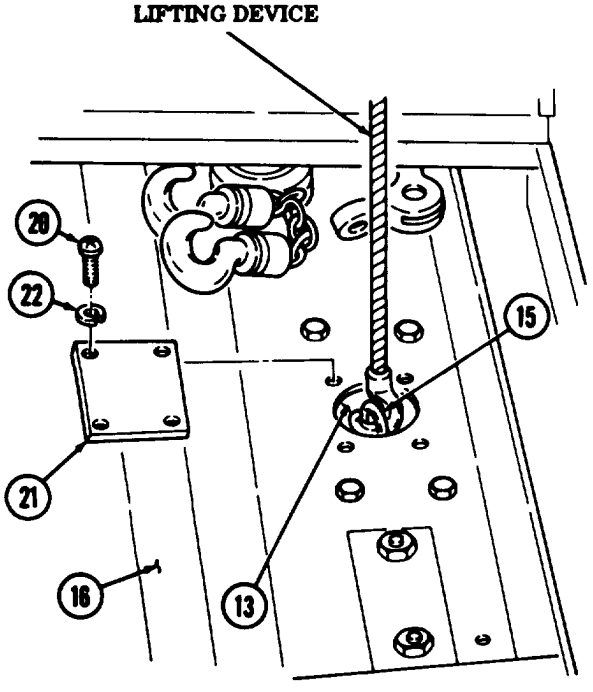

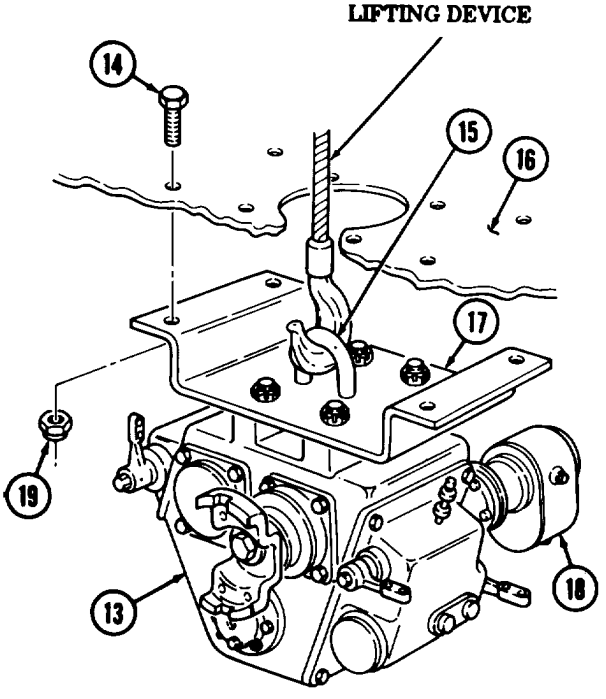

16-47. POWER DIVIDER AND DRIVE REPLACEMENT (Contd)

NOTE

Mark flanges on power divider and drive for installation.

16. Remove six screws (7), lockwashers (6), drive (4), and gasket (2) from power divider (1). Discard lockwashers (6) and gasket (2).

b. Installation

NOTE

- Aline scribe marks on drive and power divider flanges if new power divider is being installed. Ensure drain plugs face downward.
- Assistant will help with steps 1 through 8.

1. Position new gasket (2) on flange of drive (4).
2. Aline key (5) of shaft (3) with keyway of coupling (8) and install drive (4) and gasket (2) on power divider (1) with six new lockwashers (6) and screws (7).
3. Position power divider (1) on supports and secure with safety strap.
4. Position power divider (1) and drive (4) under vehicle.
5. Accessing through hole in tool box floor (11), install lifting device to ring (10) of power divider (1).

WARNING

- All personnel must stand clear during lifting operations. A swinging or shifting load may cause injury to personnel.
- Ensure lifting capacity is greater than weight (30 lb (14 kg)) of power divider. Failure to do so may result in injury to personnel or damage to equipment.

6. Raise power divider (1) to tool box floor (11) and aline holes of bracket (12) with holes of tool box floor (11).
7. Install power divider (1) on tool box floor (11) with four screws (9) and nuts (13).

16-47. POWER DIVIDER AND DRIVE REPLACEMENT (Contd)

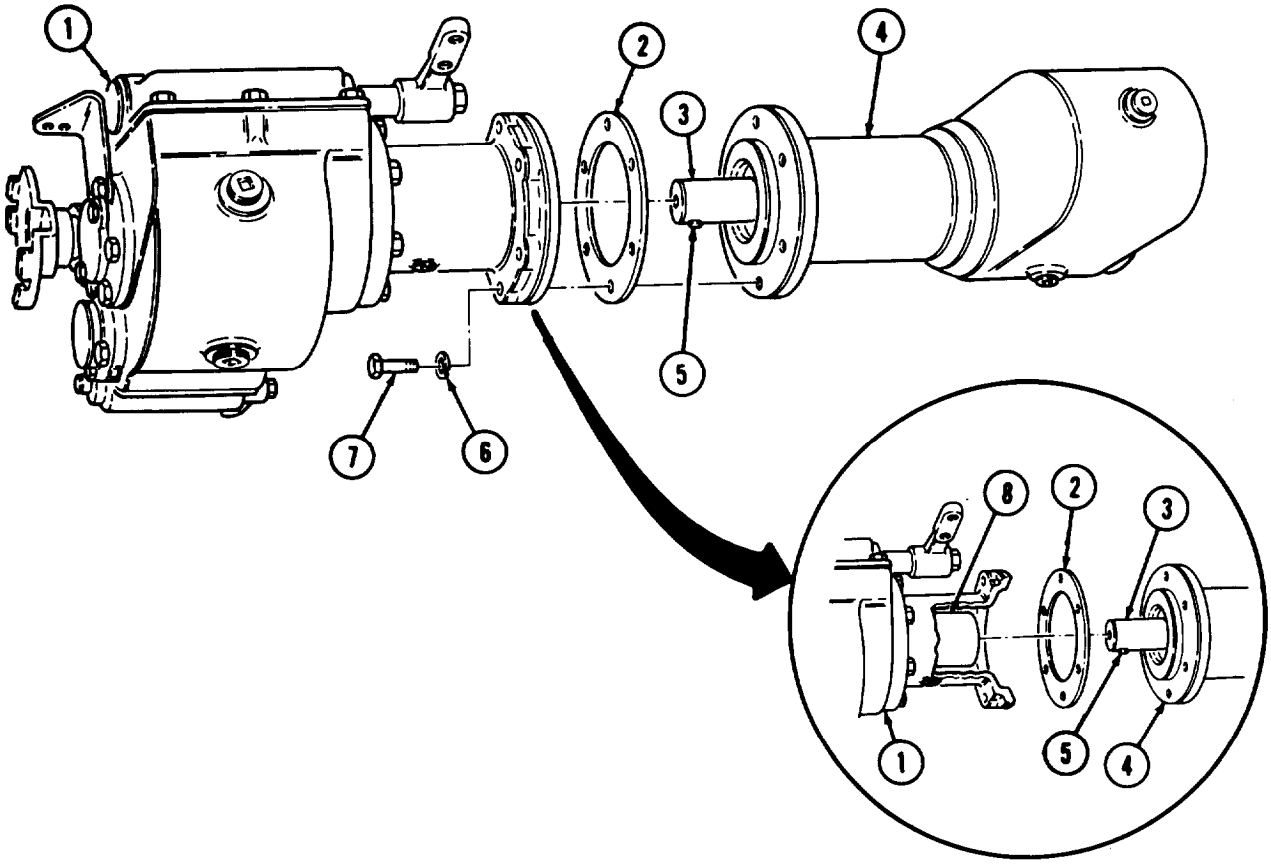

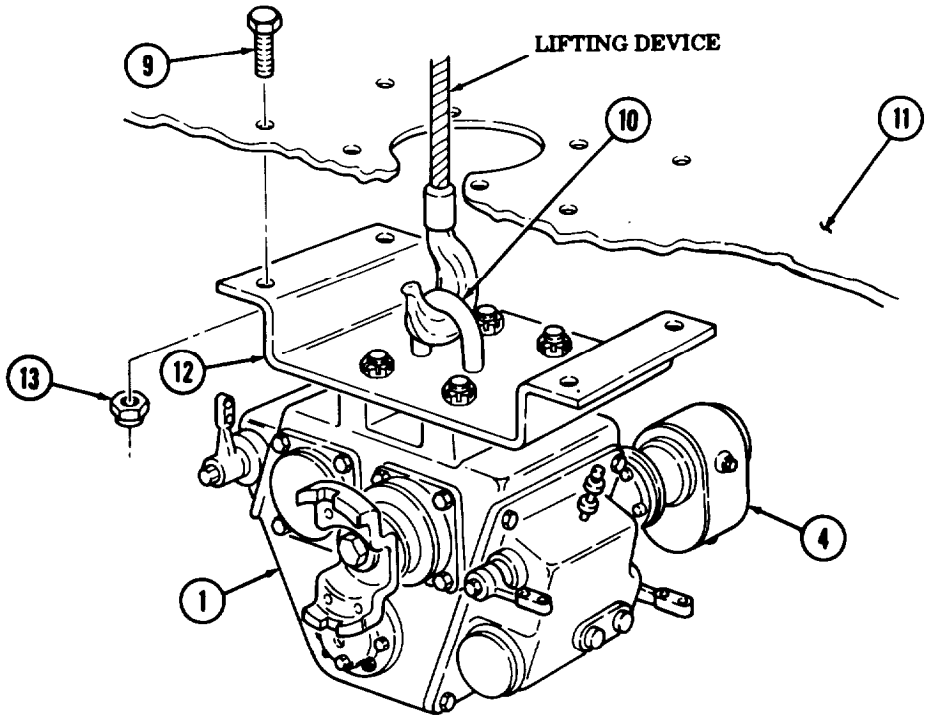

16-47. POWER DIVIDER AND DRIVE REPLACEMENT (Contd)

8. Remove lifting device from hook (2) of power divider (3).
9. Install cover (5) on tool box floor (4) with four new lockwashers (6) and screws (1).

NOTE

Perform steps 10 through 14 if new power divider is installed.

10. Wrap male threads on elbow (10) and adapter (14) with antiseize tape.
11. Remove two screws (16) and lockwashers (17) from power divider (3). Discard lockwashers (17).
12. Install bracket (18) on power divider (3) with two new lockwashers (17) and screws (16).
13. Install elbow (10) and adapter (14) on air valve (15).
14. Install two spacers (8) and air valve (15) on bracket (18) with two screws (7) and new locknuts (9).
15. Install two new sleeves (11) and air lines (12) and (13) on elbow (10) and adapter (14).

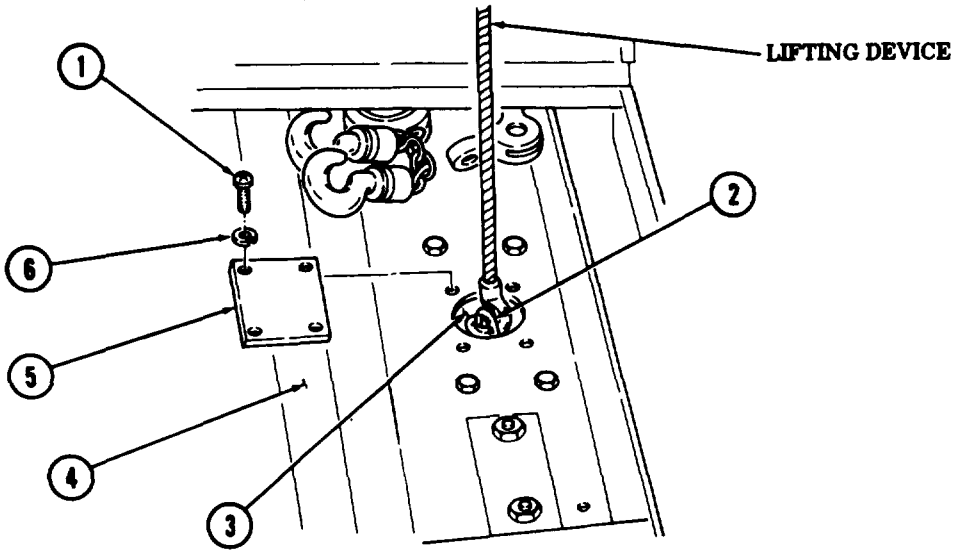

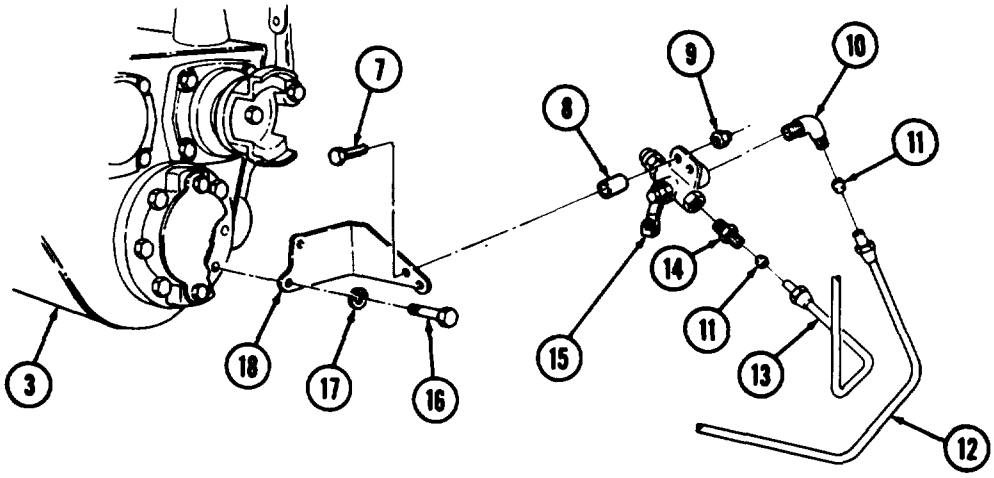

16-47. POWER DIVIDER AND DRIVE REPLACEMENT (Contd)

16. Install clevis (21) on control lever (26) with two washers (20), straight pin (25), and new cotter pin (19).
17. Install control link (22) on air valve (27) with two washers (23) and two new cotter pins (24).
18. Install control link (32) on control lever (34) with straight pin (33) and new cotter pin (35).
19. Install control link (31) on control lever (30) with straight pin (29) and new cotter pin (28).

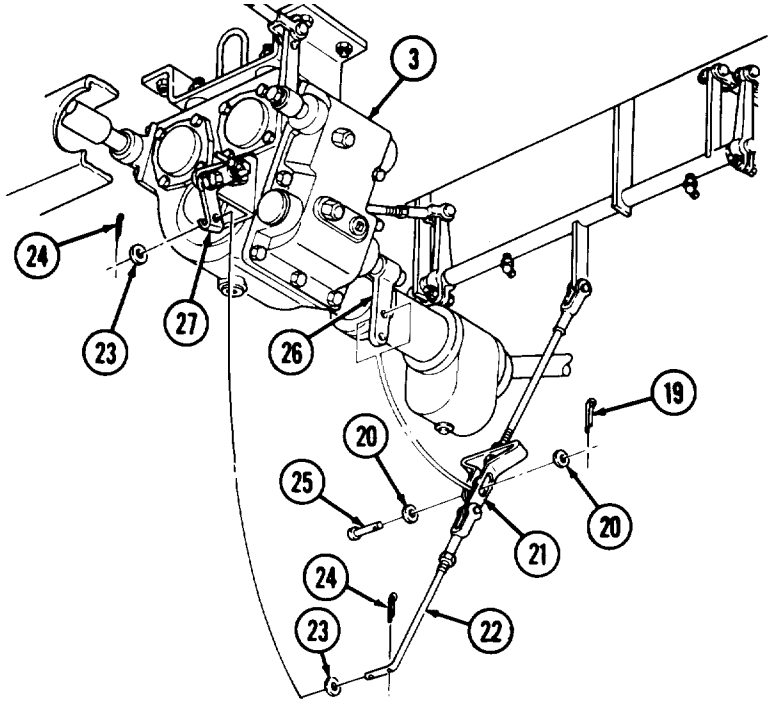

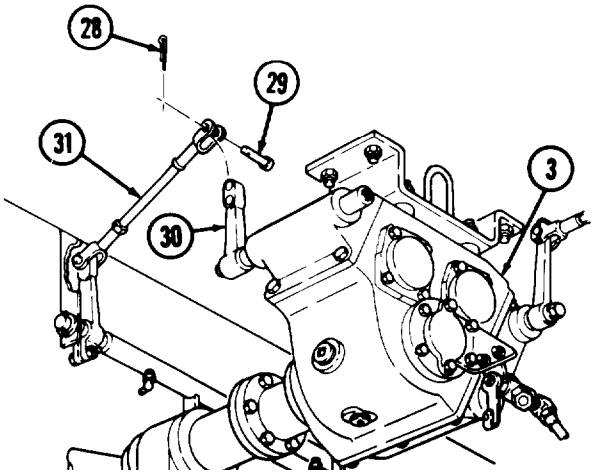

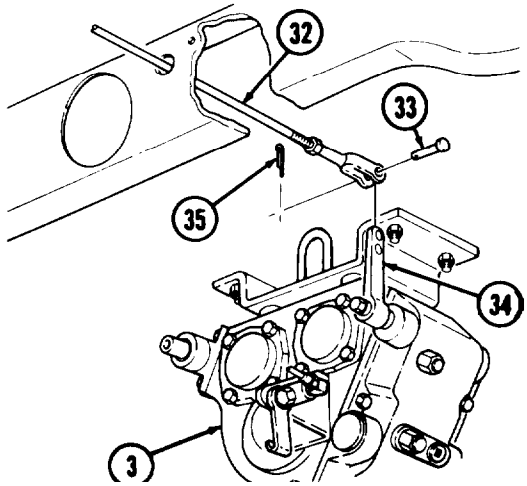

FOLLOW-ON TASKS:
- Install power divider-to-hydraulic pump propeller shaft (TM 9-2320-260-20).
- Install power divider-to-rear winch drive propeller shaft (TM 9-2320-260-20).
- Install transfer-to-power divider propeller shaft (TM 9-2320-260-20).
- Fill power divider and drive with oil to proper level (LO 9-2320-260-12).
- Start engine (TM 9-2320-260-10), Check for leaks and proper operation.

16-48. POWER DIVIDER REPAIR

THIS TASK COVERS:

a. Disassembly
b. Cleaning and Inspection
c. Assembly

INITIAL SETUP

APPLICABLE MODELS
M816

TOOLS
General mechanic's tool kit (Appendix B, Item 1)
Mechanical puller kit (Appendix B, Item 14)
Dial indicator (Appendix B, Item 11)
Inside micrometer (Appendix B, Item 9)
Outside micrometer (Appendix B, Item 8)

MATERIALS/PARTS
Forty-two lockwashers (Appendix D, Item 215)
Three lockwashers (Appendix D, Item 223)
Three lockwashers (Appendix D, Item 252)
Four gaskets (Appendix D, Item 66)
Two gaskets (Appendix D, Item 68)
Gasket (Appendix D, Item 74)
Gasket (Appendix D, Item 70)

MATERIALS/PARTS (Contd)
Gasket (Appendix D, Item 68)
Gasket (Appendix D, Item 66)
Four seals (Appendix D, Item 438)
Three seals (Appendix D, Item 437)
Seal (Appendix D, Item 439)
Seal (Appendix D, Item 440)
Four cotter pins (Appendix D, Item 39)
Woodruff key (Appendix D, Item 559)
Pin (Appendix D, Item 317)
Two expansion plugs (Appendix D, Item 330)
Gear oil (Appendix C, Item 22)

REFERENCES (TM)
TM 9-2320-260-34P-2

EQUIPMENT CONDITION
Power divider removed (para. 16-47).

a. Disassembly

1. Remove four screws (4), lockwashers (3), shifter housing (2), and gasket (1) from housing (5). Discard lockwashers (3) and gasket (1).
2. Remove eight screws (7), lockwashers (6), double shifter housing (8), and gasket (9) from housing (5). Discard lockwashers (6) and gasket (9).

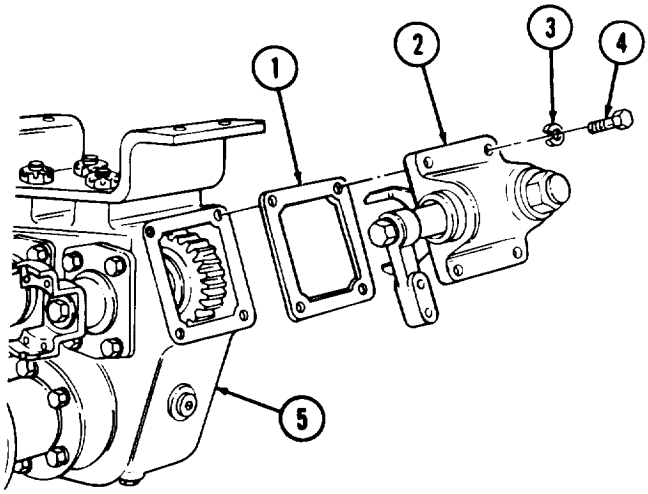

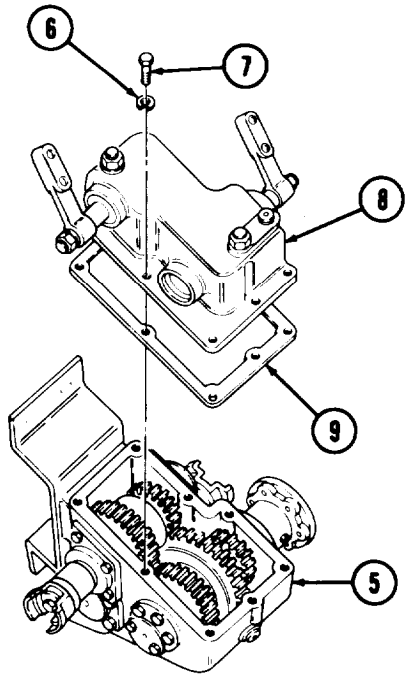

16-48. POWER DIVIDER REPAIR (Contd)

3. Remove screw (10), lockwasher (11), washer (12), and gasket (13) from yoke (14) and winch shaft (15). Discard lockwasher (11) and gasket (13).
4. Using puller, remove yoke (14) from winch shaft (15).
5. Remove four screws (20), lockwashers (19), cover (18), and gasket (16) from housing (5). Discard lockwashers (19) and gasket (16).
6. Remove seal (17) from cover (18). Discard seal (17).

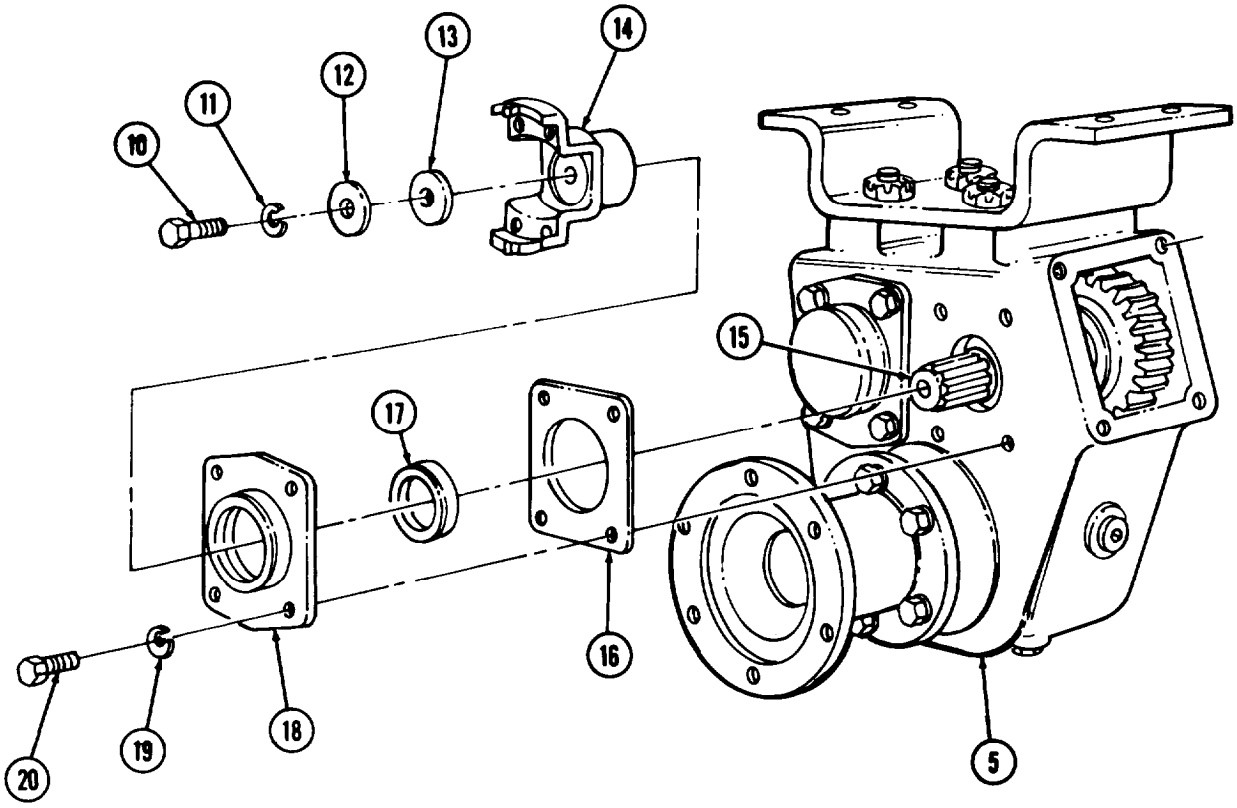

16-48. POWER DIVIDER REPAIR (Contd)

7. Remove four screws (8), lockwashers (9), cover (7), and gasket (6) from housing (10). Discard lockwashers (9) and gasket (6).
8. Using brass drift, tap on end (3) of winch shaft (2) and remove winch shaft (2) and winch gear (11) through opening (4) of housing (10).
9. Using puller, remove bearing (1) from winch shaft (2).
10. Remove winch gear (11) from winch shaft (2).
11. Using puller, remove bearing (5) from winch shaft (2).
12. Remove plug (15) from adapter (14).

NOTE

Access setscrew through plug opening.

13. Remove setscrew (18) and coupling (17) from pump shaft (21).
14, Remove six screws (13), lockwashers (12), adapter (14), and gasket (16) from housing (10). Discard lockwashers (12) and gasket (16).
15. Remove seal (19) from adapter (14). Discard seal (19).
16. Remove woodruff key (22) from pump shaft (21). Discard woodruff key (22).
17. Remove seal (20) from housing (10). Discard seal (20).

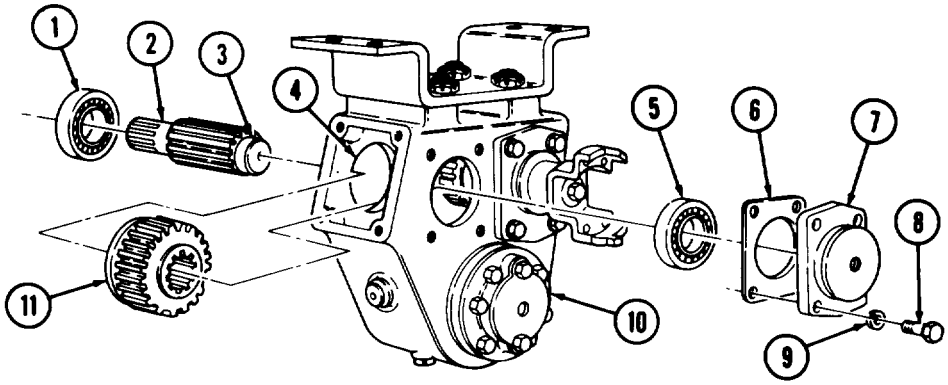

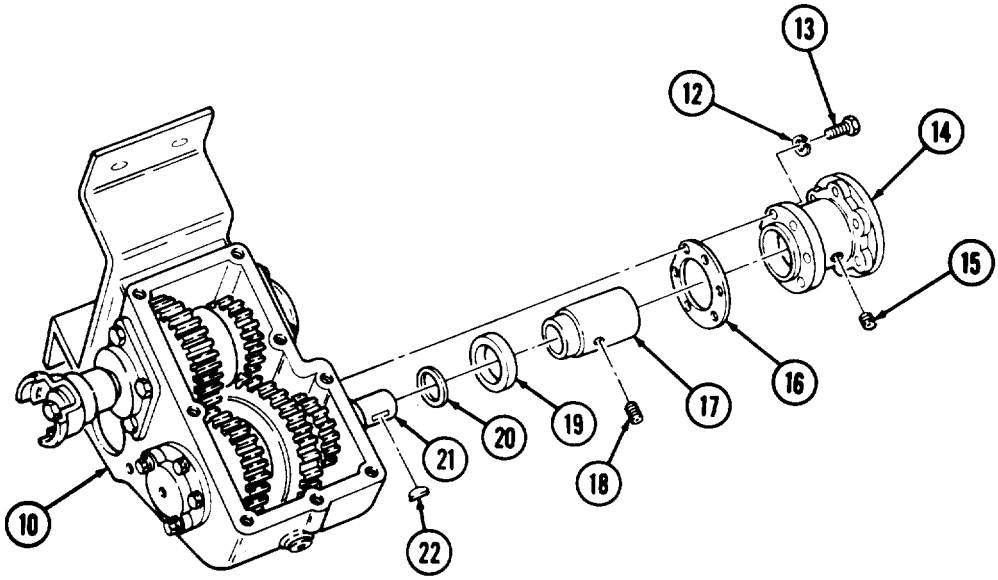

16-48. POWER DIVIDER REPAIR (Contd)

18. Remove two screws (23), lockwashers (24), cover plate (25), and gasket (26) from adapter (27). Discard lockwashers (24) and gasket (26).
19. Remove four screws (44), lock washers (43), adapter (27), and gasket (42) from housing (10). Discard lockwashers (43) and gasket (42).
20. Remove seal (28) from adapter (27). Discard seal (28).

NOTE

Clutch gear will catch bearing as shaft passes through clutch gear.

21. Using a brass drift and hammer, tap adapter end (33) of pump shaft (21) to force pump shaft (21) through positive clutch gear (30), bore (29), and spur gear (39).
22. Remove pump shaft rear bearing (32) from pump shaft (21).
23. Remove pin (31) from pump shaft (21). Discard pin (31).
24. Remove pump shaft front bearing (41), thrust washer (40), spur gear (39), and clutch thrust washer (35) through opening (34) of housing (10).
25. Remove roller bearings (36) and (38) and spacer (37) from spur gear (39).

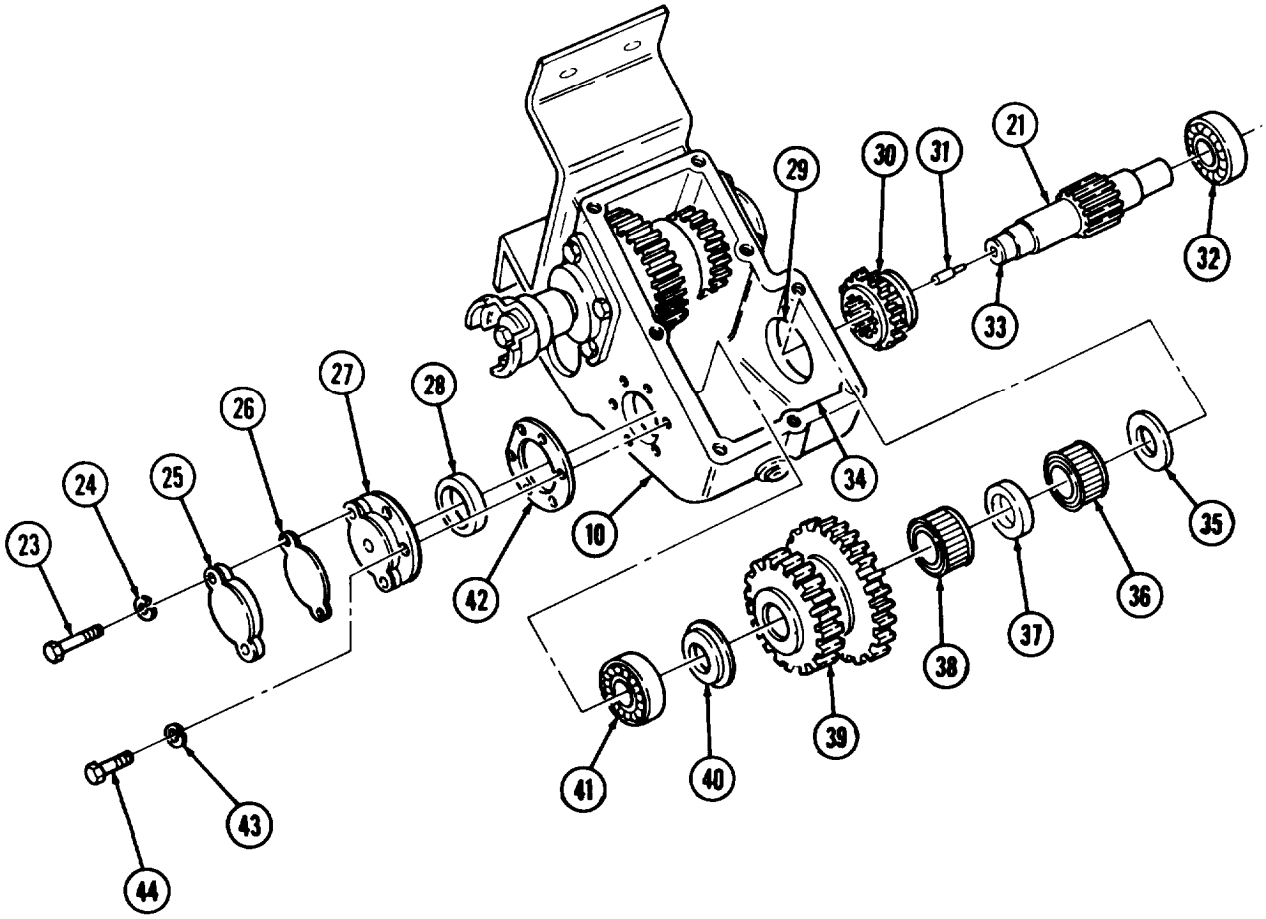

16-48. POWER DIVIDER REPAIR (Contd)

26. Remove screw (22), lockwasher (21), washer (20), and gasket (19) from input shaft (6). Discard lockwasher (21) and gasket (19).
27. Using puller, remove yoke (23) from input shaft (6).
28. Remove four screws (18), lockwashere (17), cap (24), and gasket (15) from housing (13). Discard lockwashers (17) and gasket (15).
29. Remove seal (16) from cap (24). Discard seal (16).
30. Remove four screws (9), lockwashers (10), cover (11), and gasket (12) from housing (13). Discard lockwashers (10) and gasket (12).
31. Place housing (13) on blocking with splined end of input shaft (6) down. Blocking must be high enough to allow clearance for input shaft (6).
32. Using brass drift and hammer, tap input shaft (6) and outer race of input shaft bearing (1) to force shaft. (6) and input shaft bearing (1) back through bore (14) of housing (13).
33. Remove input shaft bearing (1) and input shaft (6) through bore (14) of housing (13).
34. Remove input shaft bearing (8), input gear thrust washer (5), clutch (7), drive gear (4), and input gear thrust washer (2) from housing (13).
35. Remove roller bearing (3) from drive gear (4).
36. Press input gear bearing (1) from input shaft (6).

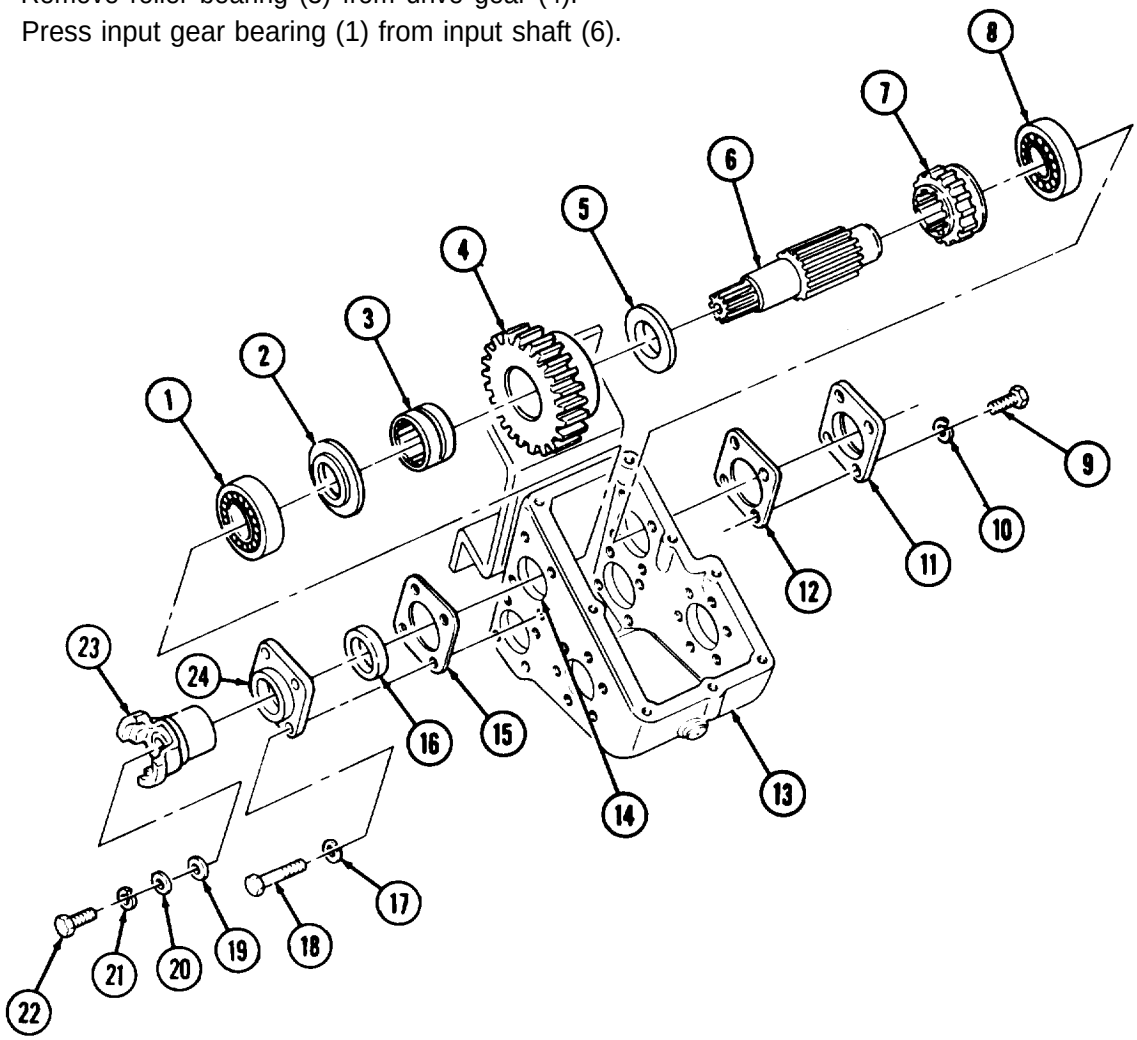

16-48. POWER DIVIDER REPAIR (Contd)

NOTE

Mark bracket and housing for installation.

37. Remove four cotter pins (28), slotted nuts (27), and bracket (25) from studs (26) on housing (13). Discard cotter pins (28).
38. Remove two retaining caps (33), springs (32), and ball bearings (31) from double shifter housing (37).
39. Remove two screws (29), lockwashers (36), and levers (35) from shifter shafts (30) and (34). Discard lockwashers (36).
40. Remove two screws (38), lockwashers (40), and forks (39) from shifter shafts (30) and (34). Discard lockwashers (40).

NOTE

Tag levers and shifter shafts for installation.

41. Remove shifter shafts (30) and (34) from double shifter housing (37).

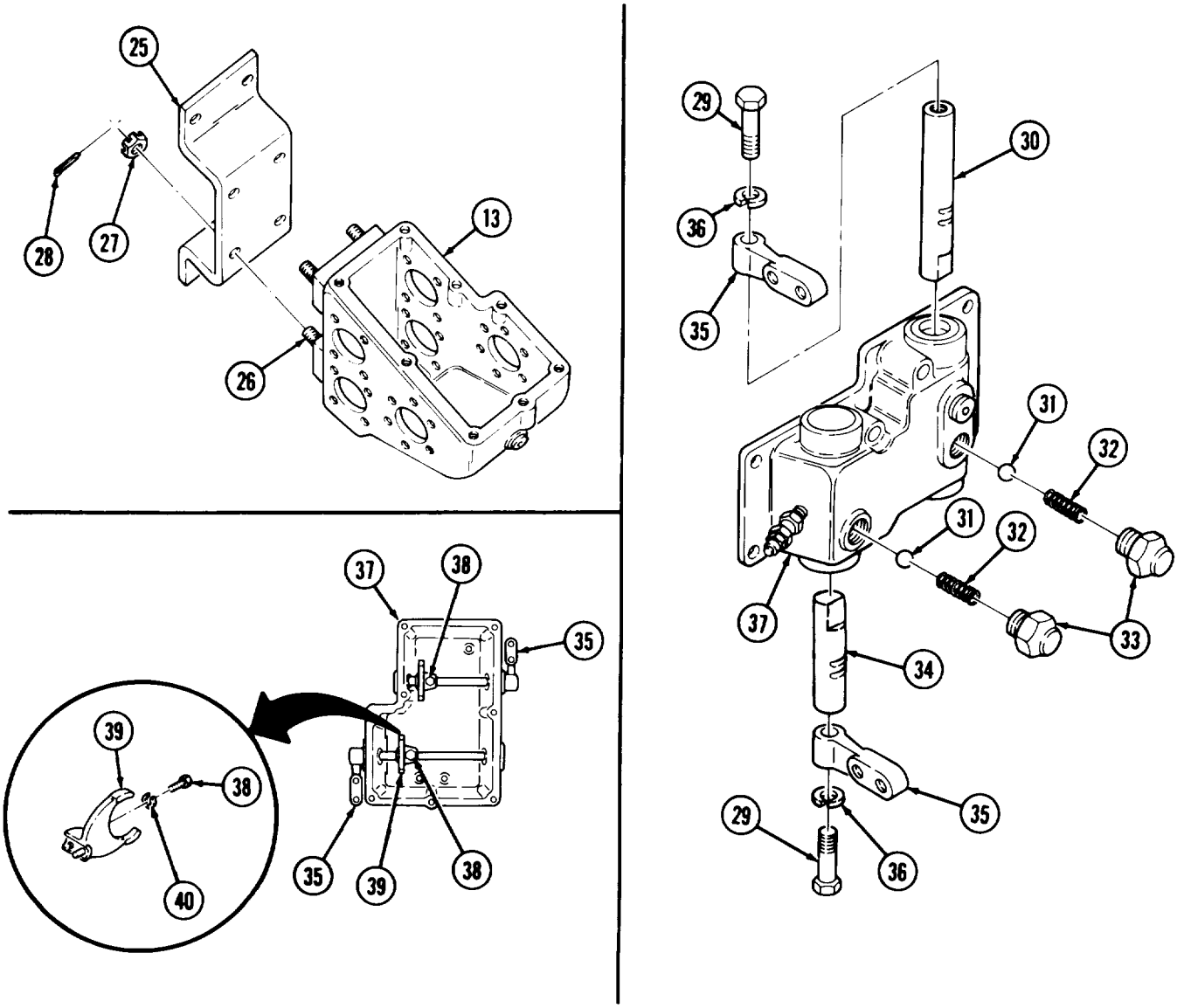

16-48. POWER DIVIDER REPAIR (Contd)

42. Remove plug (7) from double shifter housing (4).
43. Remove two seals (6) from double shifter housing (4). Discard seals (6).
44. Remove two expansion plugs (6) from double shifter housing (4). Discard expansion plugs (5).
45. Remove breather (1), adapter (2), and nipple (3) from double shifter housing (4).
46. Remove retainer (17), spring (18), and ball bearing (19) from single shifter housing (11).
47. Remove screw (8), lockwasher (9), and shift fork (10) from shifter shaft (13). Discard lockwasher (9).

NOTE

Mark arm and shaft for installation.

48. Remove shifter shaft (13) from single shifter housing (11).
49. Remove screw (16), lockwasher (15), and lever (14) from shifter shaft (13). Discard lockwasher (15).
50. Remove two seals (12) from single shifter housing (11). Discard seals (12).

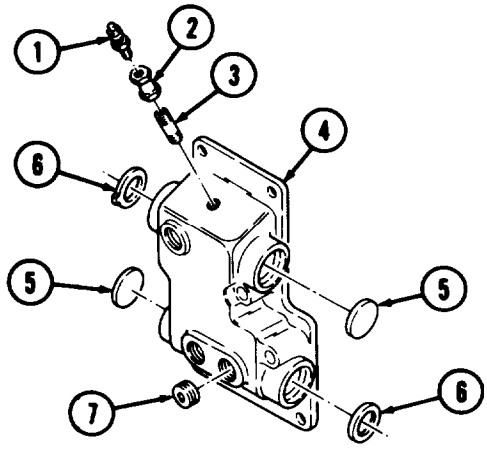

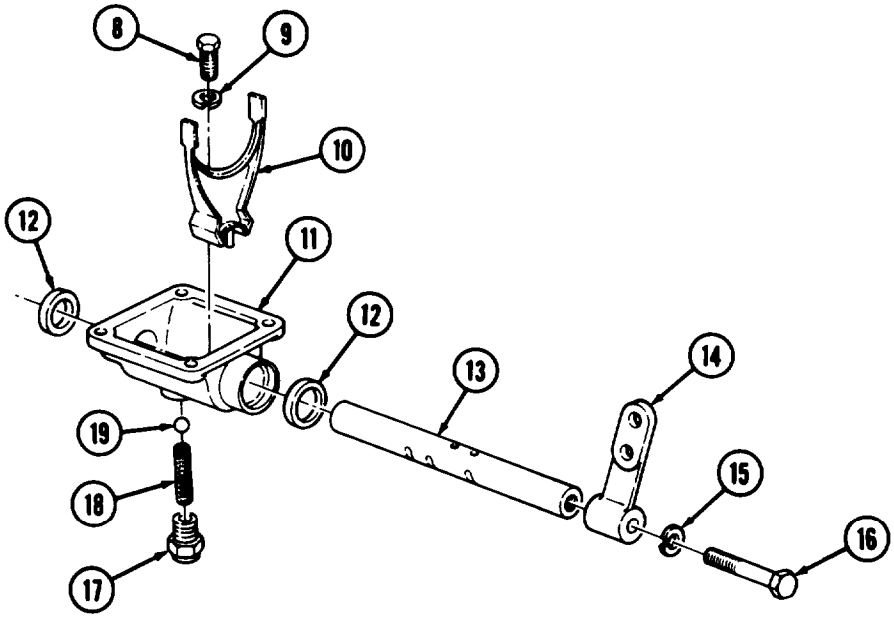

16-48. POWER DIVIDER REPAIR (Contd)

b. Cleaning and Inspection

1. For general cleaning instructions, refer to para. 2-8.
2. For general inspection instructions, refer to para. 2-9.
3. Inspect double shifter housing (5), single shifter housing (16), and housing (20) for cracks, breaks, and wear. Refer to table 16-21, Power Divider and Shifter Housings Wear Limits, for measurements. Replace housings (5), (16), or (20) if damaged or worn past limits.

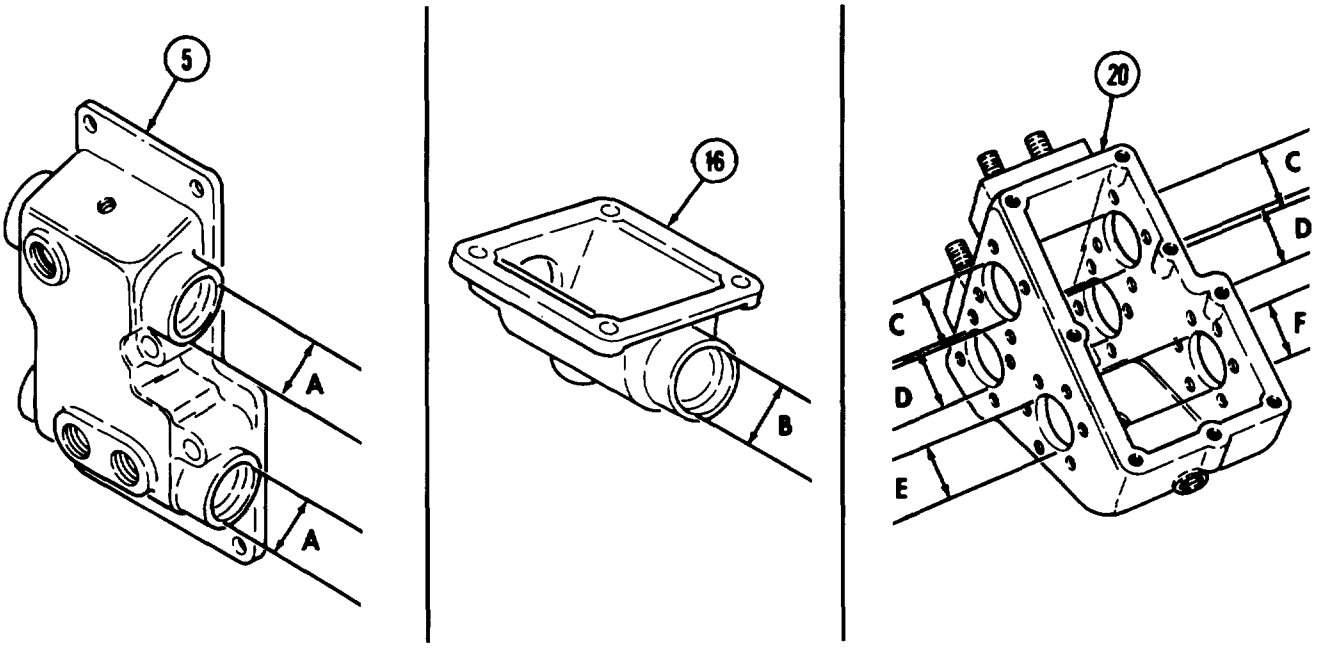

Table 16-21. Power Divider and Shifter Housings Wear Limits.

ITEM NO.	ITEM/POINT OF MEASUREMENT	WEAR LIMITS/TOLERANCES	
		INCHES	MILLIMETERS
5	Double shifter housing A Shifter shaft bores (4) - maximum	1.501	38.125
16	Single shifter housing B. Shifter shaft bores - maximum	1.501	38.125
20	Housing C. Input shaft bores - maximum	3.1503	80.018
	D. Winch shaft bores – maximum	3.1503	80.018
	E. Pump shaft front bore – maximum	2.8353	72.017
	F. Pump shaft rear bore - maximum	3.1503	80.018

16-48. POWER DIVIDER REPAIR (Contd)

4. Inspect bearings (1), (5), (7), (11), (12), and (15), fork (19), and thrust washers (6) and (9) for wear. Refer to table 16-22, Power Divider Parts Wear Limits, for measurements. Replace bearings (1), (5), (7), (11), (12), or (15), fork (19), or thrust washers (6) or (9), if worn past limits.

5. Inspect yoke (4), gears (3), (8), (13), and (16), winch shaft (2), pump shaft (10), and three shifter shafts (18) for cracks, burrs, pits, chips, and wear. Refer to table 16-22, Power Divider Parts Wear Limits. Replace yoke (4), gears (3), (8), (13), or (16), winch shaft (2), or pump shaft (10) if damaged or worn past limits.

6. Inspect spring (17) free length. Refer to table 16-22, Power Divider Parts Wear limits, for measurements. Replace spring (17), if worn past limits.

Table 16-22. Power Divider Parts Wear Limits.

ITEM NO.	ITEM/POINT OF MEASUREMENT	WEAR LIMITS/TOLERANCES	
		INCHES	MILLIMETERS
1	Winch shaft bearings (3)		
	Inner diameter - maximum	1.5743	39.987
	Outer diameter - minimum	3.1491	79.987
2	Winch shaft - outer diameter - front and rear bearing – minimum	**1.5747**	**39.997**
3	Winch gear	1.5747	39.997
4	Yoke (2) - outer diameter - seal surface	1.873	47.574
5	Input shaft bearings (2)		
	Inner diameter – maximum	1.5743	39.987
	Outer diameter – minimum	3.1491	79.987
6	Input gear thrust washers (2) – thickness - minimum	0.172	4.37
7	Bearing – inner diameter - maximum	1.752	44.501
8	Drive gear – inner diameter - maximum	2.3122	58.730
9	Clutch thrust washers (2) – thickness - minimum	0.172	4.37
10	Pump shaft		
	Outer diameter - rear bearing - minimum	1.5747	39.997
	Outer diameter - front bearing – minimum	1.3779	34.999
	Outer diameter - gear bearing - minimum	1.4995	38.087
11	Pump shaft rear bearing		
	Inner diameter – maximum	1.5743	39.987
	Outer diameter – minimum	3.1491	79.987
12	Pump shaft front bearing		
	Inner diameter - maximum	1.3780	35.001
	Outer diameter – minimum	2.8341	71.986
13	Spur gear - inner diameter – maximum	2.126	54.000
14	Input shaft		
	Outer diameter - front and rear bearing	1.7495	44.437
	Outer diameter - needle bearing - minimum	1.5747	39.997
15	Roller bearings (2)		
	Inner diameter – maximum	1.752	44.501
	Outer diameter – minimum	2.312	58.725
16	Positive clutch gear		
17	Spring		
	Free length	1.656	42.06
	Length at 38 lb (17 kg) load	1.00	25.4
18	Shifter shaft (3) - outer diameter - minimum	0.997	25.324
19	Fork (3) – 2 pads width - minimum	0.300	7.620

16-48. POWER DIVIDER REPAIR (Contd)

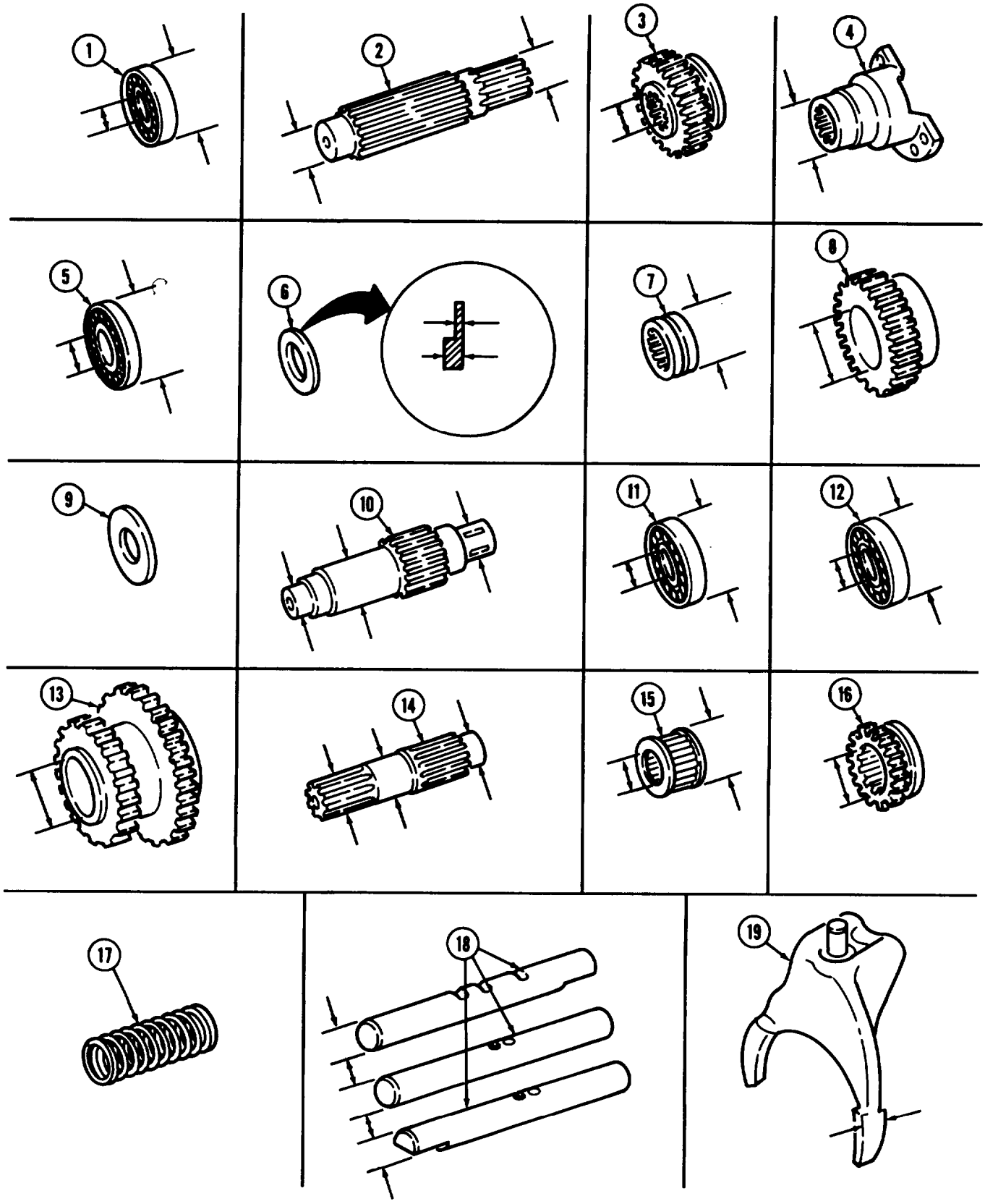

16-48. POWER DIVIDER REPAIR (Contd)

c. Assembly

NOTE

- Coat seals with gear oil before installation.
- Coat all internal parts of power divider with light coat of gear oil before assembly.

1. Aline lever (9) on shifter shaft (7) and install with new lockwasher (10) and screw (11).
2. Install two new seals (6) in bores (5).
3. Slide shifter shaft (7) with lever (9) into bore (5) of shifter housing (17).
4. Install shift fork (3) with pin (4) alined to pin hole (8) on shifter shaft (7) with new lockwasher (2) and screw (1).

NOTE

Ensure ball bearing is seated in groove.

5. Aline grooves (12) in shifter shaft (7) with bore (16) in single shifter housing (17) and install ball bearing (13) and spring (14) in single shifter housing (17) with retainer (15).
6. Install adapter (20), nipple (19) and breather (18) in double shifter housing (21).
7. Install plug (25) in double shifter housing (21).
8. Install two new seals (24) and new expansion plugs (23) in bores (22) of double shifter housing (21).

NOTE

Aline marks on levers with marks on shifter shafts.

9. Install levers (28) and (30) on shifter shafts (34) and (41) in double shifter housing bores (22) with new lockwashers (27) and (31) and screws (26) and (32).

NOTE

Both forks are mounted on shifter shafts the same, but positioned opposite. Pin holes aline with forks on shifter shafts.

10. Aline two ins (45) with holes (29) and (33) in shifter shafts (41) and (34) and install two forks (42) with new lockwashers (44) and screws (43).
11. Aline grooves (40) and (35) in shifter shafts (34) and (41) with bores (39) in double shifter housing (21), and install two ball bearings (36) and springs (37) in double shifter housing (21) with two retainers (38).
12. Aline marks on bracket (46) and housing (47) and place bracket (46) over studs (48).
13. Install bracket (46) on housing (47) with four slotted nuts (49) and new cotter pins (50).

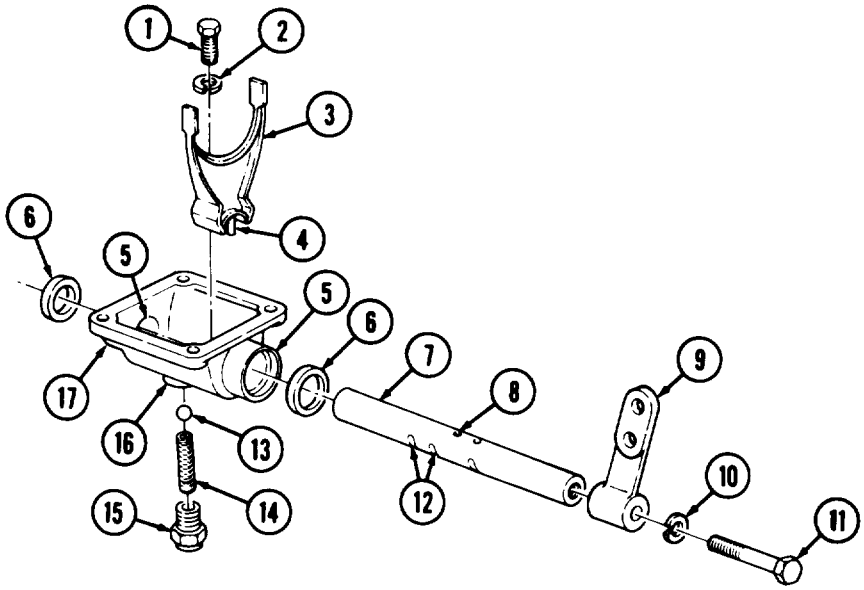

16-48. POWER DIVIDER REPAIR (Contd)

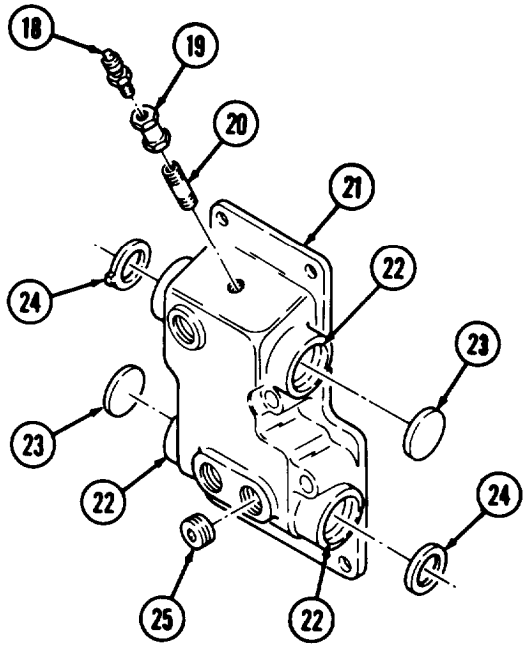

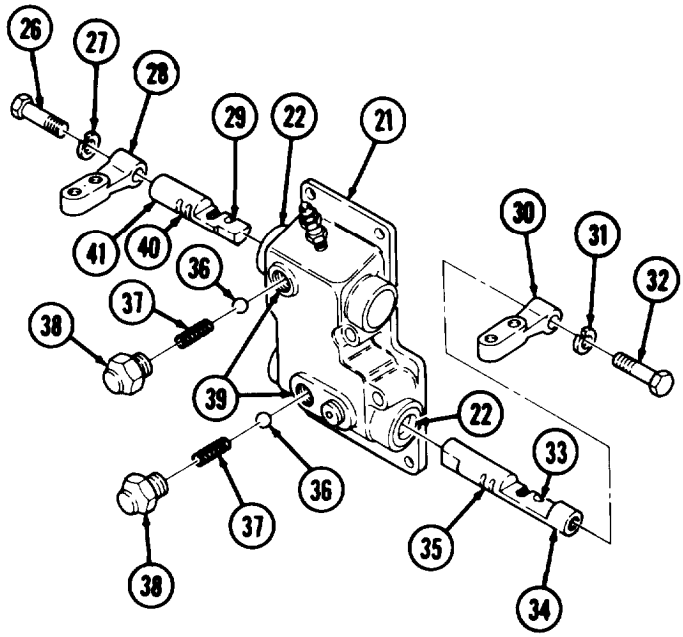

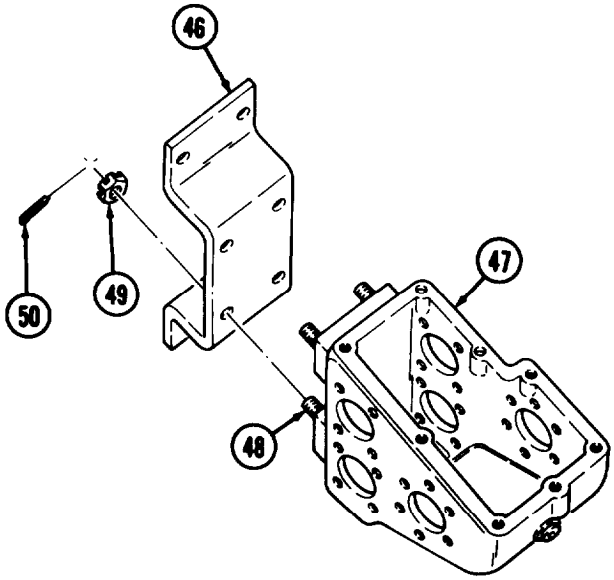

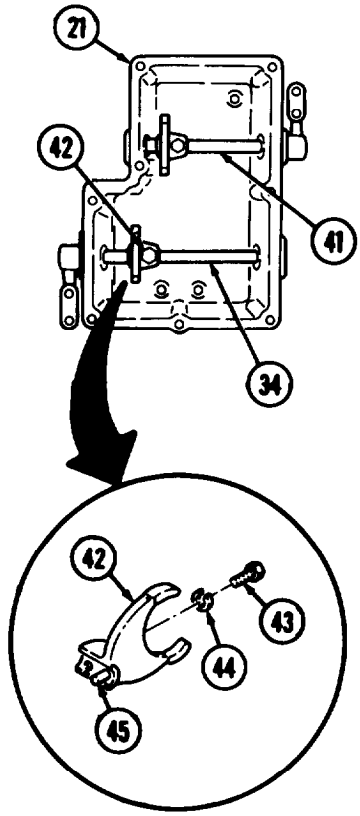

16-48. POWER DIVIDER REPAIR (Contd)

14. Press roller bearing (9) into drive gear (10) and position drive gear (10) in housing (6). Coat roller bearing (9) with gear oil after installation.
15. Install splined end of input shaft (3) through bore (2), input gear thrust washer (11),drive gear (10) and input gear thrust washer (8).
16. Press bearing (1) on input shaft (3) through bore (7).
17. Install clutch (4) on gear end of input shaft (3) by pushing through bore (2).
18. Install input shaft bearing (5) on input shaft (3) of housing (6).

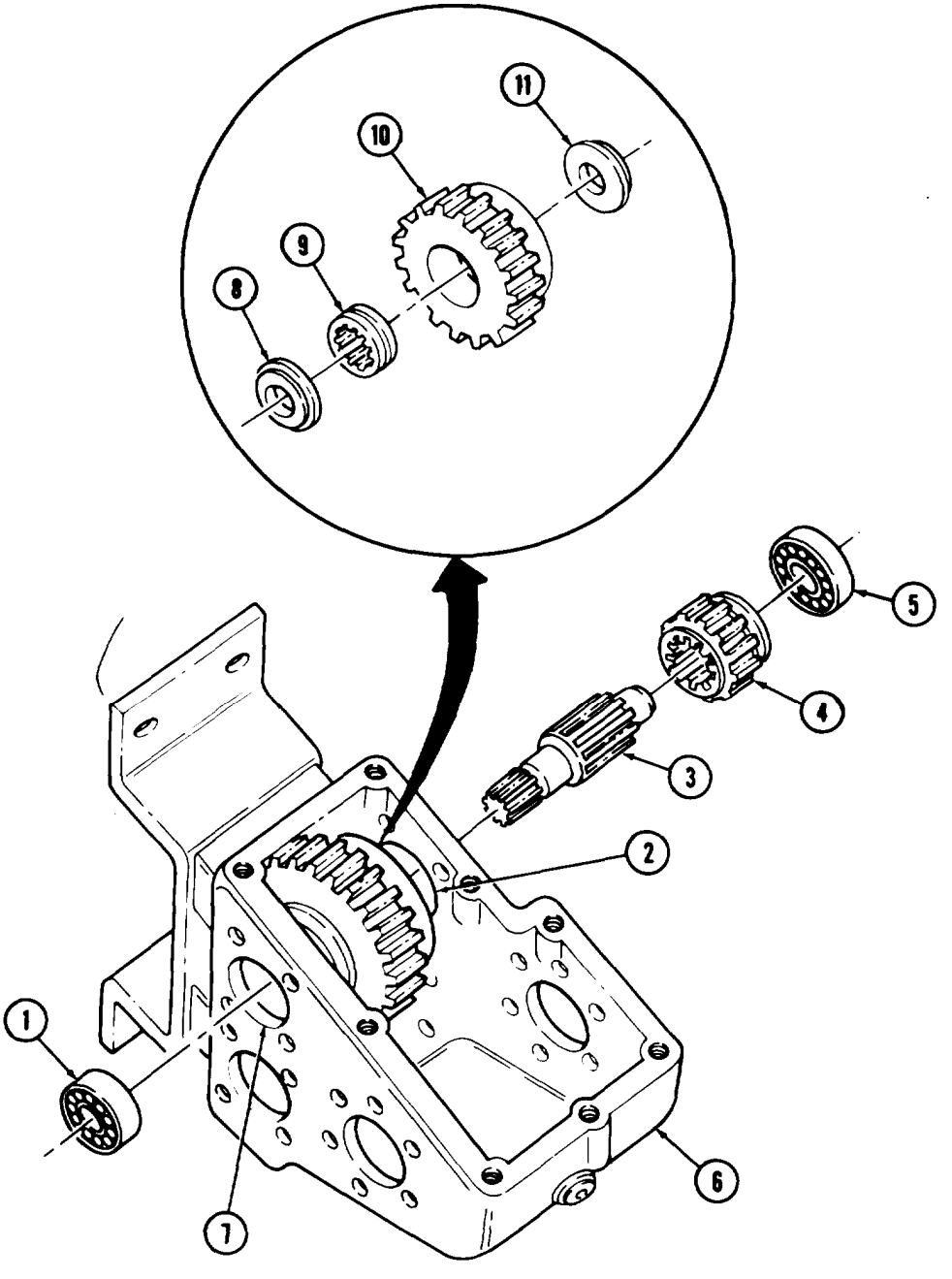

16-48. POWER DIVIDER REPAIR (Contd)

19. Install new gasket (12) and cover (13) on housing (6) with four new lockwashers (14) and screws (15).
20. Install new seal (17) in cover (18).
21. Install new gasket (16) and cover (18) on housing (6) with four new lockwashers (20) and screws (19).
22, Check end play of input shaft:
    a. Attach dial indicator to end of input shaft (3).
    b. Move input shaft (3) back and forth and record end play movement.
    c. If end play of input shaft (3) is between 0.010-0.033 in. (0.25-0.84 mm), remove dial indicator and go to Step 25.
    d. If end play of input shaft (3) is not between 0.010-0.033 in. (0.25-0.84 mm), then perform steps 23 and 24 until end play of input shaft (3) is correct.
23. Remove four screws (19), lockwashers (20), and cover (18) from housing (6). Discard lockwashers (20).
24. Install or remove a new gasket (16), then replace cover (18) on housing (6) with four new lockwashers (20) and screws (19). Go back to step 22b.
25. Install yoke (25) on input shaft (3) and housing (6) with new gasket (24), washer (23), new lockwasher (22), and screw (21).

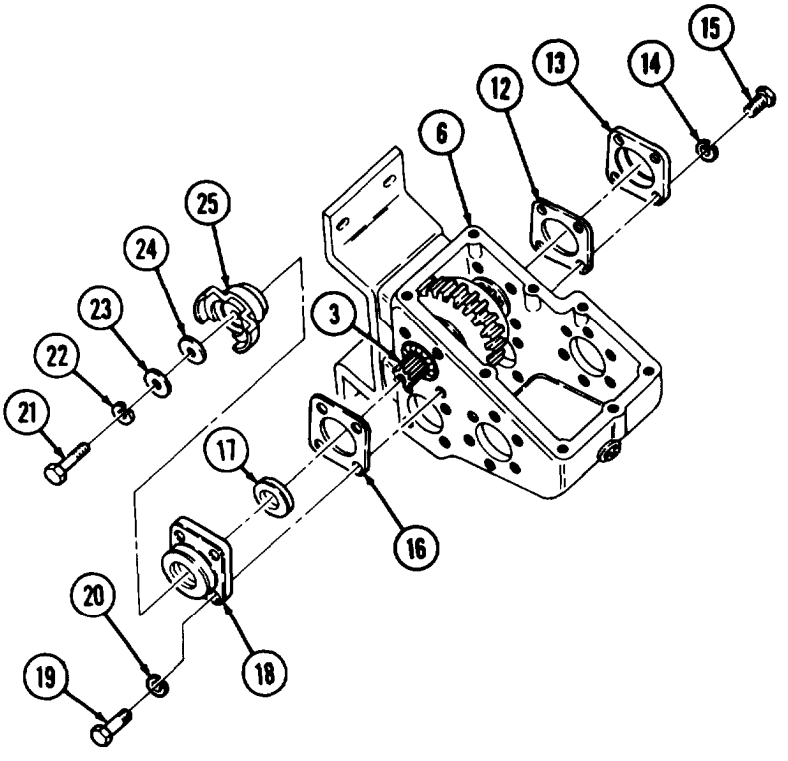

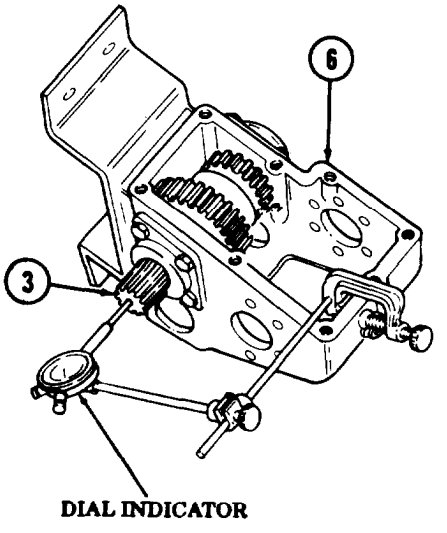

16-48. POWER DIVIDER REPAIR (Contd)

26. Install new pin (10), positive clutch gear (9), clutch thrust washer (13), roller bearing (14), spacer (15), and roller bearing (16) on pump shaft (11).
27. Press pump shaft front bearing (19) in bore (20) flush with inner surface of housing (8).
28. Install pump shaft (11) through spur gear (17) and spur thrust washer (18).
29. Press pump shaft (11) through pump shaft front bearing (19).
30. Install pump shaft rear bearing (12) on pump shaft (11) flush with housing (8).
31. Install new seal (6) in adapter (5).
32. Install new gasket (7) on pump shaft (11) and housing (8) with adapt (5), four new lockwashers (21), and screws (22).
33. Install new seal (30) in adapter (25).
34. Install new seal (31) on rear of pump shaft (11).
35. Install new woodruff key (32) in pump shaft (11).

NOTE

Aline adapter and housing with index marks.

36. Install new gasket (27) and adapter (25) on housing (8) with six new lockwashers (23) and screws (24).
37. Check end play of pump shaft (11):
    a. Attach dial indicator through hole in adapter (5) to ride on pin (10).
    b. Move pump shaft (11) back and forth and record end play movement.
    c. If end play of pump shaft (11) is between 0.010-0.033 in. (0.25-0.84 mm), remove dial indicator and go to Step 40.
    d. If end play of pump shaft (11) is not between 0.010-0.033 in. (0.25-0.84 mm), then perform steps 38 and 39 until end play of pump shaft (11) is correct.
38. Remove four screws (22), lockwashers (21), and adapter (5) from housing (8). Discard lockwashers (21).
39. Install or remove a new gasket (7), then replace adapter (5) with four new lockwashers (21) and screws (22). Go back to step 37b.
40. Install new gasket (4) and cover plate (3) on adapter (5) with two new lockwashers (2) and screws (1).

NOTE

- Aline setscrew hole in coupling with hole in pump shaft.
- Work through plug hole in adapter.

41. Install coupling (28) on pump shaft (11) with setscrew (29).
42. Install plug (26) in adapter (25).

16-48. POWER DIVIDER REPAIR (Contd)

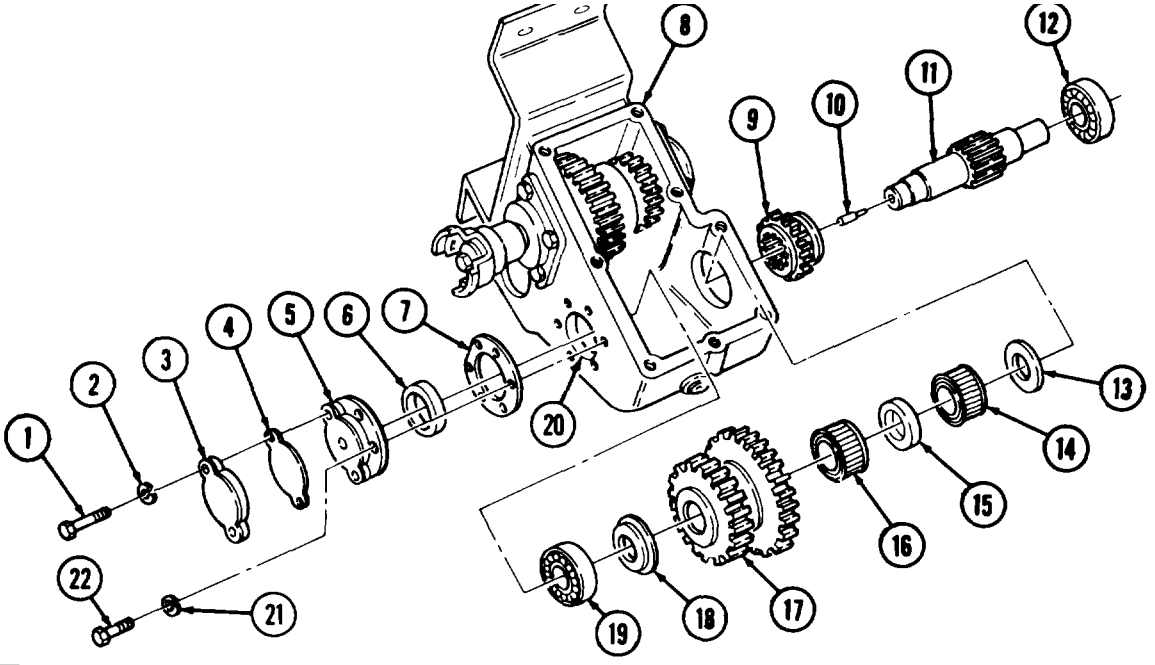

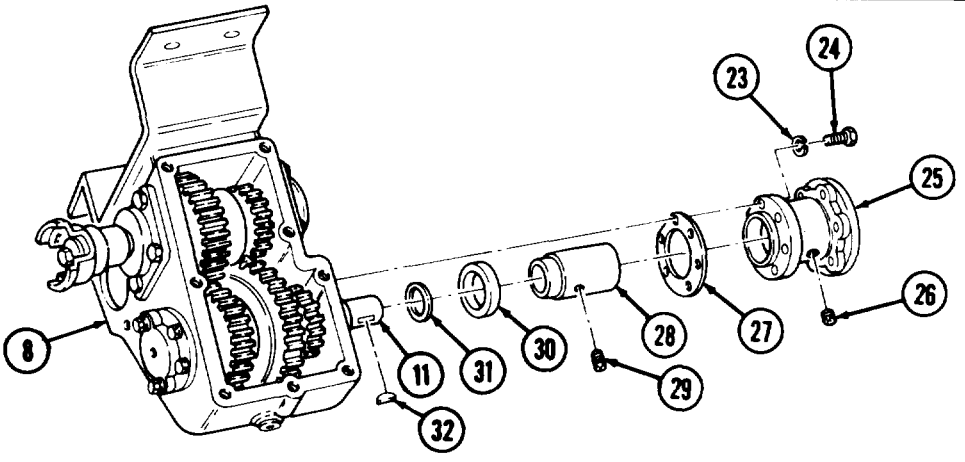

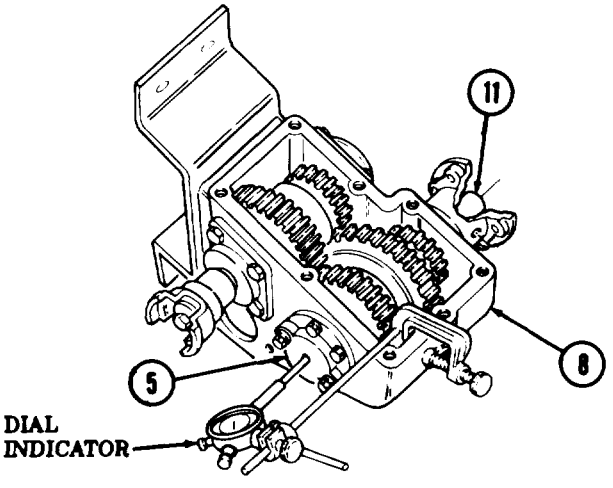

16-48. POWER DIVIDER REPAIR (Contd)

43. Position winch shaft (2) in housing (3) and install winch gear (9) and bearing (4) on winch shaft (2).

NOTE

Bearing should be even with inside of housing.

44. Install bearing (1) on winch shaft (2).
45. Install new gasket (5) and cover (6) with four new lockwashers (7) and screws (8).
46. Install new seal (18) in cover (15).
47. Install new gasket (19) and cover (15) on splined end of winch shaft (2) and housing (3) with four new lockwashers (16) and screws (17).
48. Check end play of winch shaft (2):
    a. Attach dial indicator to winch shaft (2) and housing (3).
    b. Move winch shaft (2) back and forth and record end play movement.
    c. If end play of winch shaft. (2) is between 0.010-0.033 in. (0.25-0.84 mm), remove dial indicator and go to Step 51.
    d. If end play of winch shaft (2) is not between 0.010-0.033 in. (0.25-0.84 mm), then perform steps 49 and 50 until end play of winch shaft (2) is correct.
49. Remove four screws (17), lockwashers (16), and cover (15) from housing (3). Discard lockwashers (16).
50. Install or remove a new gasket (19), then replace cover (15) on housing (3) with four new lockwashers (16) and screws (17). Go back to step 48b.
51. Install yoke (14) on winch shaft (2) with new gasket (13), washer (12), new lockwasher (11), and screw (10).

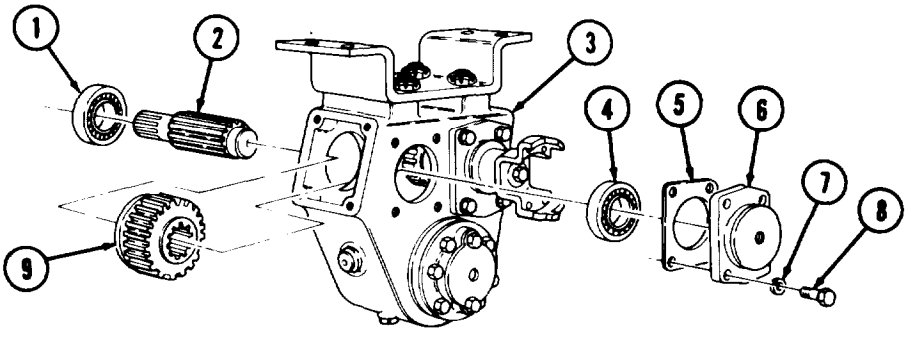

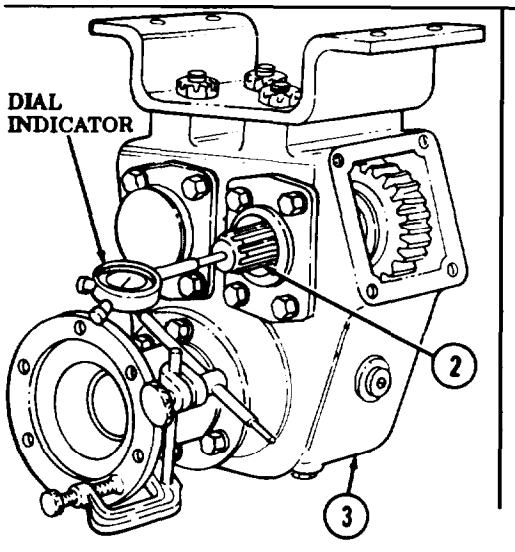

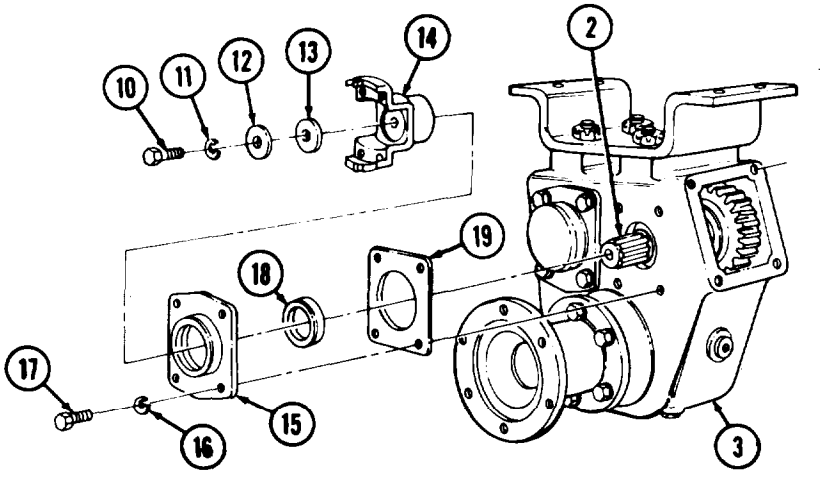

16-48. POWER DIVIDER REPAIR (Contd)

NOTE

- Ensure shifter moves in three detent positions and yoke moves in opposite direction as shifter moves from one detent to another with central being neutral.
- Ensure fork is alined with yoke of clutch or yoke of gear before installing.

52. Install double shifter housing (22) on housing (3) with new gasket (23), eight new lockwashers (21), and screws (20).
53. Install shifter housing (26) on housing (3) with new gasket (27), four new lockwashers (25), and screws (24).

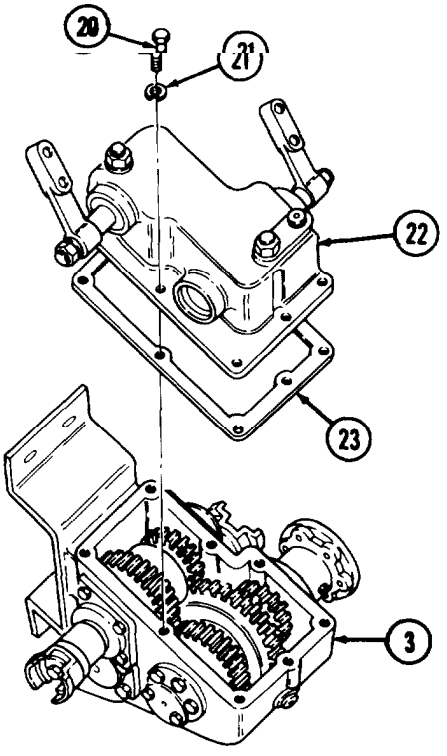

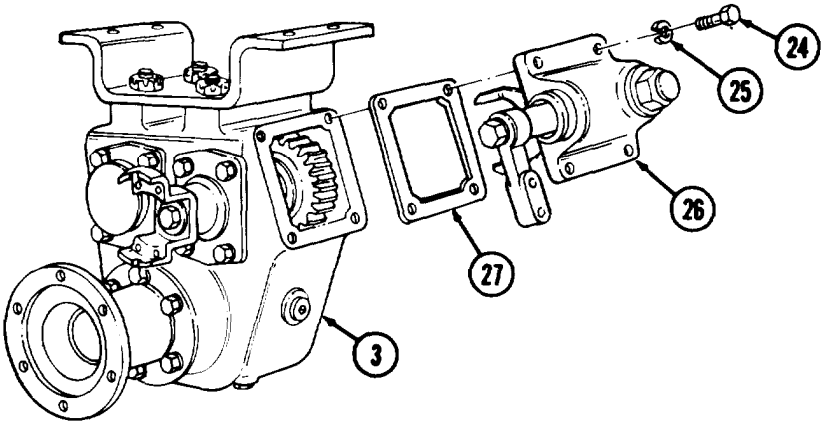

FOLLOW-ON TASK: Install power divider (para. 16-47)

16-49. DRIVE REPAIR

THIS TASK COVERS:

a. Disassembly
b. Cleaning, Inspection, and Repair
c. Assembly

INITIAL SETUP

APPLICABLE MODELS
M816

TOOLS
General mechanic's tool kit (Appendix B, Item 1)
Soft-head hammer (Appendix B, Item 47)
Arbor press (Appendix B, Item 7)

MATERIALS/PARTS
Lockwasher (Appendix D, Item 224)
Four lockwashers (Appendix D, Item 215)

MATERIALS/PARTS (Contd)
Two woodruff keys (Appendix D, Item 550)
Gasket (Appendix D, Item 102)
Gear oil (Appendix C, Item 22)
Antiseize tape (Appendix C, Item 50)

REFERENCES (TM)
TM 9-2320-260-34P-2

EQUIPMENT CONDITION
Power drive removed (para. 16-47).

a. Disassembly

1. Remove screw (8), lockwasher (7), and washer (6) from shaft (12). Discard lockwasher (7).
2. Remove flange (5) from shaft (12).
3. Remove retaining ring (14) from housing (1).
4. Remove four screws (9), lockwashers (10), housing (4), and gasket (3) from housing (1). Discard gasket (3) and lockwashers (10).
5. Press shaft (12) and front bearing (13) out of housing (1).
6. Remove shaft (12) and rear bearing (2) from housing (4).
7. Remove two woodruff keys (11) from shaft (12). Discard woodruff keys (11).
8. Press bearing (2) and (13) from shaft (12).

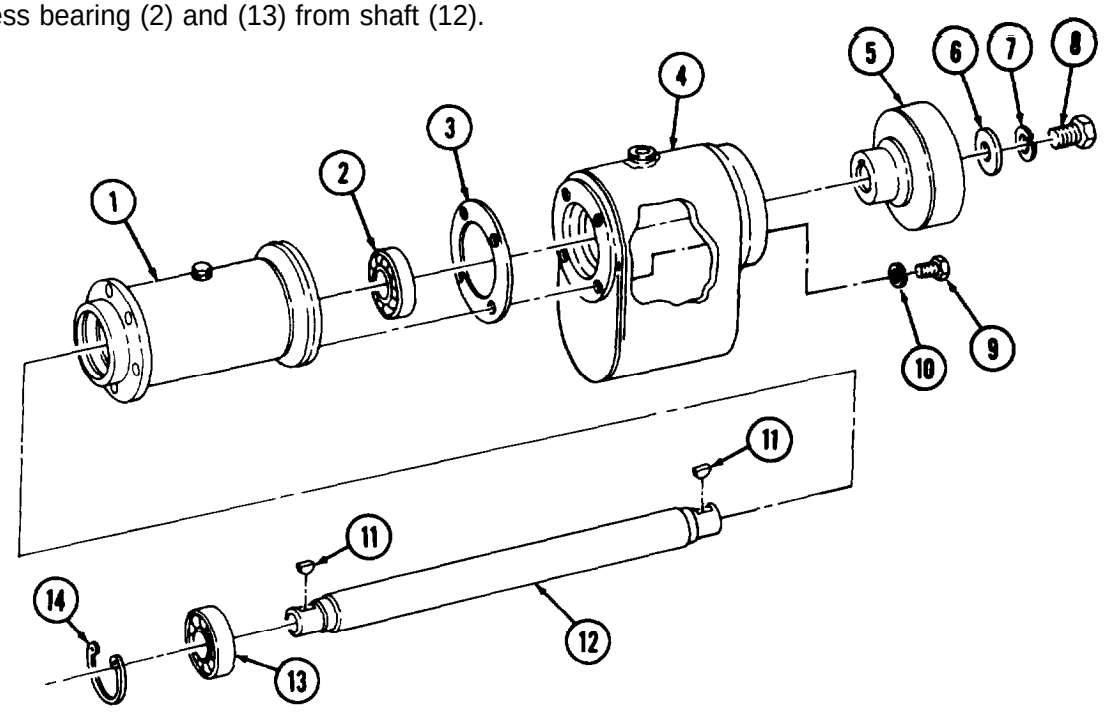

16-49. DRIVE REPAIR (Contd)

b. Cleaning, Inspection, and Repair

1. For general cleaning instructions, refer to para. 2-8.
2. For general inspection instructions, refer to para. 2-9.
3. Wrap male threads on breather (16) with antiseize tape.
4. Remove and inspect breather (15) for dents, stripped threads, and wear. Replace breather (15) if damaged.
5. Inspect flange (5) for cracks, stripped or damaged threads. Repair or replace flange (5) if damaged.
6. Inspect shaft (12) and housings (1) and (4) for breaks, cracks, stripped threads, and wear. Refer to table 16-23, Drive Parts Wear Limits, for measurements. Replace shaft (12) or housing (1) or (4) if damaged or worn past limits.
7. Inspect bearings (2) and (13) for wear. Refer to table 16-23, Drive Parts Wear Limits, for measurements; Replace bearings (2) or (13) if worn past limits.

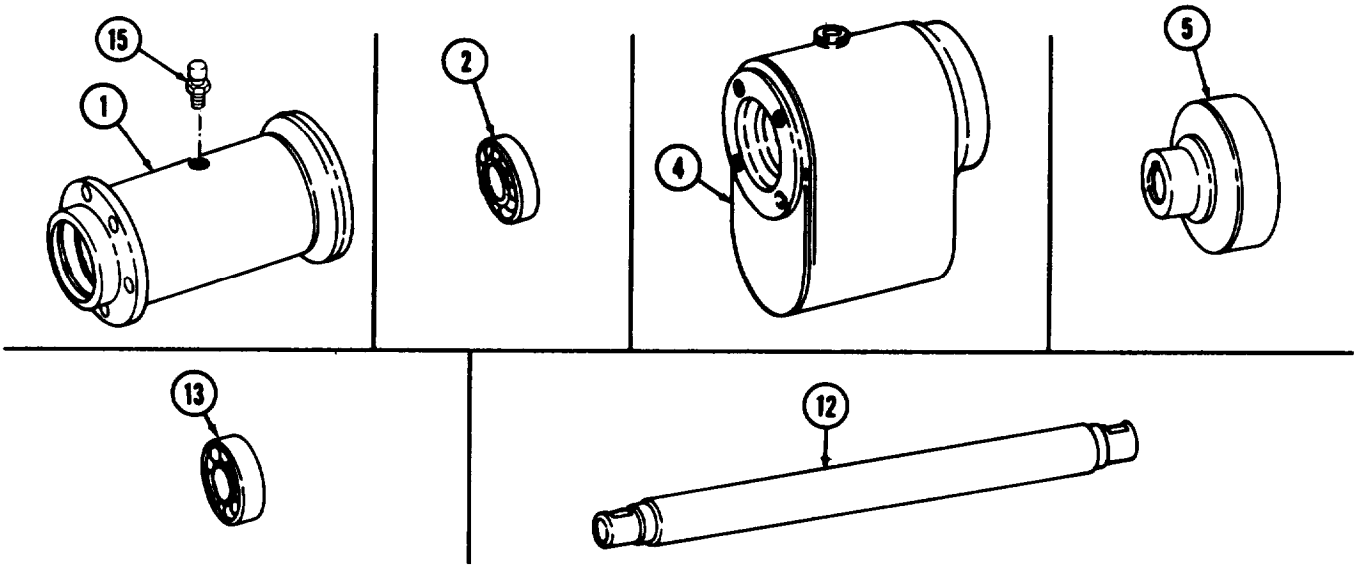

Table 16-23. Drive Parts Wear Limits.

ITEM NO.	ITEM/POINT OF MEASUREMENT	WEAR LIMITS/TOLERANCES	
		INCHES	MILLIMETERS
1	Housing - bearing bore (2) - inner diameter - maximum	3.1503	80.018
2,13	Bearings		
	Inner diameter - maximum	1.5743	39.987
	Outer diameter - minimum	3.1491	79.987
4	Housing - bearing bore - inner diameter - maximum	3.1503	80.018
12	Shaft - outer diameter of bearing contact surface-minimum	1.5747	39.997

16-49. DRIVE REPAIR (Contd)

c. Assembly.

1. Position shaft (16) in housing (4).
2. Press bearings (2) and (14) onto shaft (16) and seat to shoulders (11) and (12) of shaft (16),
3. Install two new woodruff keys (15) in shaft (16).
4. Position new gasket (3) and housing (1) over shaft (16), ensuring screw holes in housing (1) and gasket (3) aline with screw holes in housing (4).
5. Using a soft-head hammer, tap housing (1) over bearing (14).
6. Install four new lockwashers (10) and screws (9) through housing (4) and into housing(1).

NOTE

If retaining ring groove does not clear bearing, an additional gasket must be installed between the two housings.

7. Install retaining ring (13) in groove on shoulder (12). If retaining ring (13) cannot be installed, go to step 8. If retaining ring (13) can be installed, go to step 13.
8. Remove four screws (9) and lockwashers (10) from housing (4).
9. Press on shaft (16) from inside housing (4) and separate housings (1) and (4).
10. Install a second new gasket (3) on housing (4). Repeat steps 5 and 6.
11. Tap on outer race of bearing (14) until race is clear of retaining ring groove on shoulder (12).
12. Install retaining ring (13) in groove on shoulder (12).

NOTE

Aline keyway in flange with key in shaft.

13. Install flange (5) on shaft (16) with washer (6), new lockwasher (7), and screw (8).

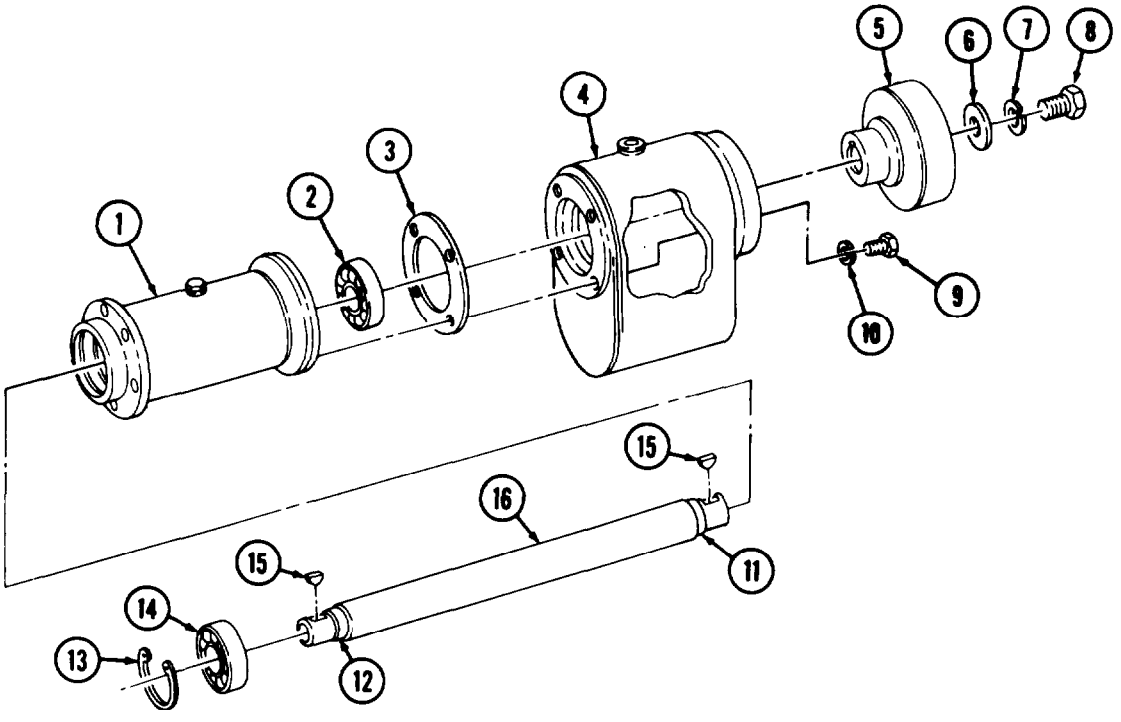

FOLLOW-ON TASK: Install drive (para. 16-47).

16-50. POWER DIVIDER GOVERNOR CONTROL VALVE REPLACEMENT

THIS TASK COVERS:

a. Removal (M816)
b. Removal (M819)
c. Installation (M819)
d. Installation (39816)

INITIAL SETUP

APPLICABLE MODELS
M816, M819

TOOLS
General mechanic's tool kit (Appendix B, Item 1)

MATERIALS/PARTS
Two sleeves (Appendix D, Item 511)
Cotter pin (M816) (Appendix D, Item 40)
Two locknuts (M816) (Appendix D, Item 169)
Two lockwashers (M816) (Appendix D, Item 215)
Two locknuts (M819) (Appendix D, Item 182)
Two locknuts (M819) (Appendix D, Item 171)

MATERIALS/PARTS (Contd
Cotter pin (M819) (Appendix D, Item 40)
Antiseize tape (Appendix C, Item 50)

REFERENCES (TM)
TM 9-2320-260-10
TM 9-2320-260-34P-1

EQUIPMENT CONDITION
- Parking brake set (TM 9-2320-260-10).
- Air reservoirs drained (TM 9-2320-260-10).

GENERAL SAFETY INSTRUCTIONS
Do not disconnect air lines before draining air reservoirs.

WARNING

Do not disconnect air lines before draining air reservoirs. Small parts under pressure may shoot out with high velocity, causing injury to personnel.

a. Removal (M816)

1. Remove air lines (9) and (10) and two sleeves (8) from elbow (7) and adapter (11). Discard sleeves (8).
2. Remove cotter pin (13), control link (16), and two washers (12) from air valve (5). Discard cotter pin (13).
3. Remove two locknuts (6), air valve (5), two spacers (2), and screws (1) from bracket (18). Discard locknuts (6).
4. Remove elbow (7) and adapter (11) from air valve (5).
5. Remove breather (3) and bushing (4) from air valve (5).
6. Remove two screws (14), lockwashers (15), and bracket (18) from power divider (17). Discard lockwashers (15).

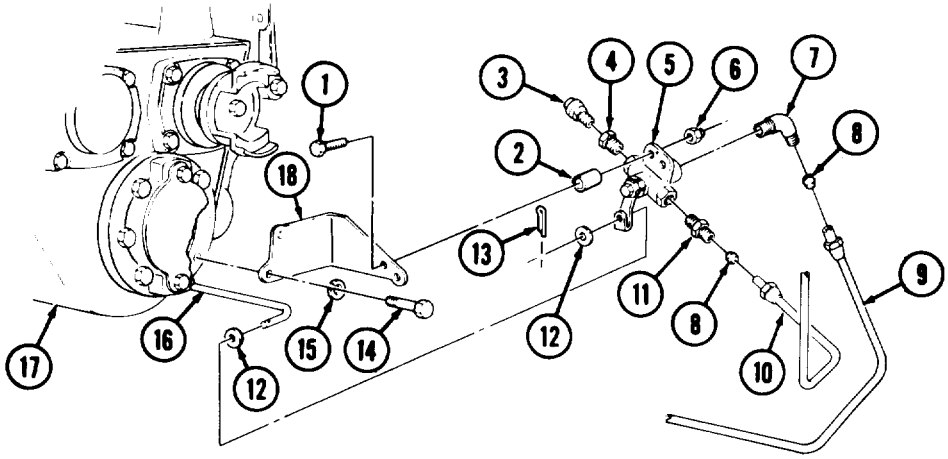

M816

16-50. POWER DIVIDER GOVERNOR CONTROL VALVE REPLACEMENT (Contd)

b. Removal (34819)

1. Remove air lines (5) and (16) and two sleeves (2) from elbow (1) and adapter (6). Discard sleeves (2).
2. Remove cotter pin (15), washer (17), and control link (4) from air valve (3). Discard cotter pin (15).
3. Remove two locknuts (7), screws (10), and air valve (3) from bracket (13). Discard locknuts (7).
4. Remove elbow (1) and adapter (6) from air valve (3).
5. Remove breather (9) and bushing (8) from air valve (3).
6. Remove two locknuts (12), screws (14), and bracket (13) from crossmember (11). Discard locknuts (12).

c. Installation (M819)

1. Install bracket (13) on crossmember (11) with two screws (14) and new locknuts (12).
2. Wrap male threads on elbow (1), air valve (3), bushing (8), and breather (9) with antiseize tape.
3. Install bushing (8) and breather (9) on air valve (3).
4. Install elbow (1) and adapter (6) on air valve (3).
5. Install air valve (3) on bracket (13) with two screws (10) and new locknuts (7).
6. Install two new sleeves (2) and air lines (5) and (16) on adapter (6) and elbow (1).
7. Install control link (4) on air valve (3) with washer (17) and new cotter pin (15).

d. Installation (M816)

1. Install bracket (35) on power divider (34) with two new lockwashers (32) and screws (31).
2. Wrap male threads on breather (20), bushing (21), elbow (24), and adapter (28) with antiseize tape.
3. Install bushing (21) and breather (20) on air valve (22).
4. Install elbow (24) and adapter (28) on air valve (22).
5. Install two spacers (19) and air valve (22) on bracket (35) with two screws (18) and new locknuts (23).
6. Install two new sleeves (25) and air lines (26) and (27) on elbow (24) and adapter (28).
7. Install control link (33) on air valve (22) with two washers (29) and new cotter pin (30).

16-50. POWER DIVIDER GOVERNOR CONTROL VALVE REPLACEMENT (Contd)

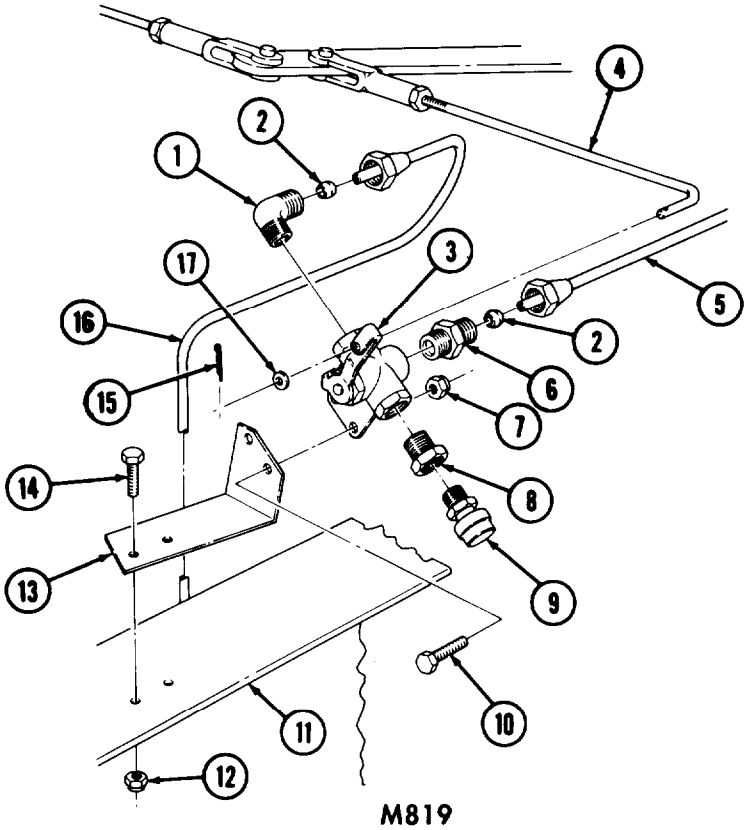

M819

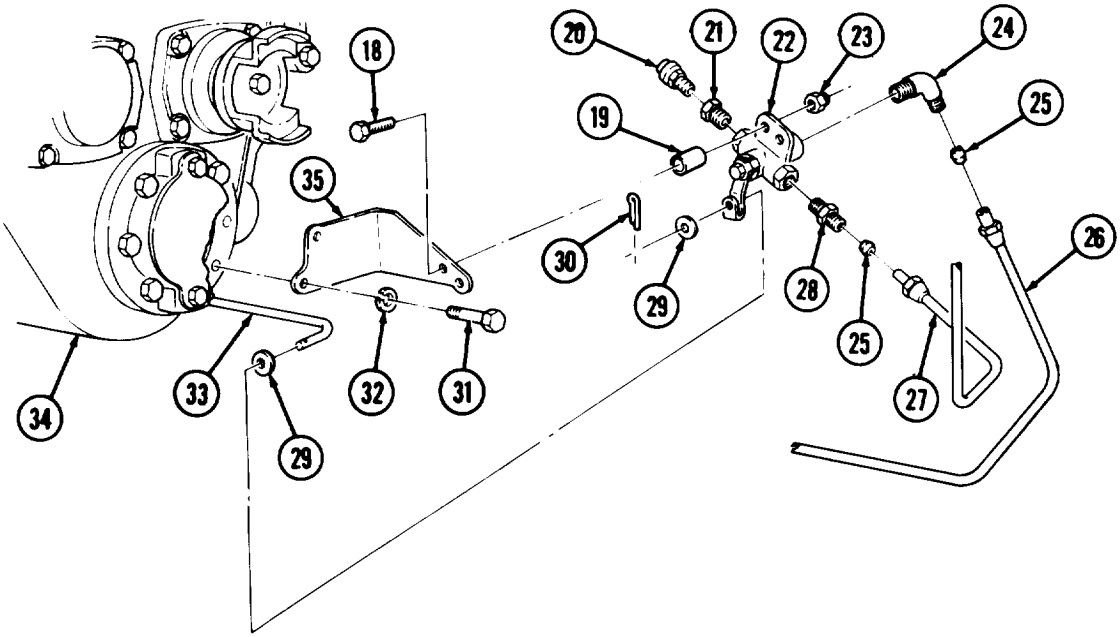

M816

FOLLOW-ON TASK: Start engine (TM 9-2320-260-10) and check for leaks.

CHAPTER 17
SPECIAL PURPOSE KIT MAINTENANCE

Section I. Description and Data (page 17-1)
Section II. Engine Coolant Heater Maintenance (page 17-3)
Section III. Personnel Heater Maintenance (page 17-36)

Section I. DESCRIPTION AND DATA

17-1. DESCRIPTION AND DATA

M809 series vehicles use engine coolant and personnel heater kits to enable the trucks to operate in temperatures of -25°F (-32°C) or less. The heaters found within the kits are capable of burning a variety of multifuels specified for M809 series trucks, and produce a heat output of 15,000 to 30,000 Btu/hr. The major components of the heaters are the ignition system, blower assembly, heat exchanger, burner assembly, and fuel metering valve. Additional data can be found in table 17-1, Engine Coolant and Personnel Heater Data.

Table 17-1. Engine Coolant and Personnel Heater Data.

1. Engine Coolant Heater	
Make	Stewart-Warner
Model	939J24
Heat Output (Coolant)	
High Heat	15,000 Btu/hr
Low Heat	8,000 Btu/hr
Fuel Pressure	3-15 psi (21-103 kPa) at fuel control valve inlet
Fuel Consumption	
High Heat	0.021-0.031 lb/rein (0.010-0.014 kg/rein)
Low Heat	0.008-0.014 lb/rein (0.004-0.006 kg/rein)
Operating Temperature Range	-60°to 100°F(-51°to38°C)
Overheat Thermostat Setting	245°F(118°C)
Restriction Thermostat Setting	160°F(71°C)

17-1. DESCRIPTION AND DATA (Contd)

Table 17-1. Engine Coolant and Personnel Heater Data (Contd).

2. Personnel Heater
   - Make . . . . . Stewart-Warner
   - Model 10530-A24
   - Heat Output
     - High Heat . . . . . 30,000 Btu/hr
     - Low Heat . . . . . 14,000 Btu/hr
   - Fuel Pressure . . . . . 3-15 psi (21-103 kPa) at fuel control valve inlet
   - Fuel Consumption
     - High Heat . . . . . 0.035-0.043 lb/rein (0.016-0.020 kg/min)
     - Low Heat . . . . . 0.019-0.025 lb/min (0.009-0.011 kg/rein)
   - Operating Temperature Range . . . . . -65°to100°F (-54° to 38°C)
   - Overheat Thermostat Setting . . . . . 600°F(316°C)
3. Personnel Heater
   - Make . . . . . Stewart-Warner
   - Model 10530B
   - Heat Output
     - High Heat . . . . . .30.000 Btu/hr
     - Low Heat . . . . . 15,000 Btu/hr
   - Fuel Pressure . . . . . 3-15 psi (21-103 kPa) at fuel control valve inlet
   - Fuel Consumption
     - High Heat . . . . . 0.036-0.040 lb/rein (0.016-0.018 kg/min)
     - Low Heat . . . . . 0.018-0.022 lb/rein (0.008-0.010 kg/min)
   - Operating Temperature Range . . . . . -55° to 91°F (-48° to 33°C)
   - Overheat Thermostat Setting . . . . . 400°F(2040C)

Section II. ENGINE COOLANT HEATER MAINTENANCE

17-2. ENGINE COOLANT HEATER MAINTENANCE INDEX

PARA NO.	TITLE	PAGE NO.
17-3.	Engine Coolant Heater Flame Detector Switch Maintenance	17-4
17-4.	Engine Coolant Heater Blower Motor Maintenance	17-8
17-5.	Engine Coolant Heater Restriction Thermostat Maintenance	17-10
17-6.	Engine Coolant Heater Component Bracket Maintenance	17-12
17-7.	Engine Coolant Heater Fuel Control Valve Replacement	17-16
17-8.	Engine Coolant Heater Overheat Switch and Igniter Maintenance	17-18
17-9.	Engine Coolant Heater Fuel Tube and Preheat Resistor Replacement	17-22
17-10.	Engine Coolant Heater Burner Maintenance	17-24
17-11.	Engine Coolant Heater Housing and Heat Exchanger Maintenance	17-26
17-12.	Engine Coolant Heater Testing	17-28

17-3. ENGINE COOLANT HEATER FLAME DETECTOR SWITCH MAINTENANCE

THIS TASK COVERS:

a. Removal
b. Disassembly
c. Inspection
d. Assembly
e. Installation

INITIAL SETUP

APPLICABLE MODELS
All

TEST EQUIPMENT
Multimeter (Appendix B, Item 115)

TOOLS
General mechanic's tool kit (Appendix B, Item 1)
Tool kit, electrical (Appendix B, Item 106)

MATERIALS/PARTS
Five screw-assembled lockwashers (Appendix D, Item 384)

MATERIALS/PARTS (Contd)
Four screw-assembled lockwashers (Appendix D, Item 386)
Sleeve (Appendix D, Item 509)
Insulation varnish (Appendix C, Item 17)

REFERENCES (TM)
TM 9-2320-260-20
TM 9-2320-260-34P-2

EQUIPMENT CONDITION
Engine coolant heater removed (TM 9-2320-260-20).

NOTE
Tag wires for installation.

a .Removal

1. Remove four screw-assembled lockwashers (9) and guard (10) from heater housing (11). Discard screw-assembled lockwashers (9).
2. Remove nut-assembled lockwasher (2), ground lead (3), air tube (4), and elbows (1) and (5) from heater housing (11).
3. Remove five screw-assembled lockwashers (12) and six leads (6) from flame detector switch (7). Discard screw-assembled lockwashers (12).
4. Loosen nut (8) and remove flame detector switch (7) from heater housing (11).

b. Disassembly

1. Remove adjusting screw (15), washer (14), and spring (20) from microswitch (16) and mount (19).

CAUTION
Ceramic rod is very brittle and is easily broken; handle carefully.

2. Tilt microswitch (16) back on mount (19), invert, and remove ceramic rod (13) from probe (17).
3. Remove sleeve (18) and nut (8) from probe (17). Discard sleeve (18).

c. Inspection

1. Inspect probe (17) of flange detector switch (7) for bends and corrosion. Remove corrosion from probe (17). Replace flame detector switch (7) if bent.
2. Inspect ceramic rod (13) for chips, cracks, and breaks. Replace ceramic rod (13) if chipped, cracked, or broken.

17-3. ENGINE COOLANT HEATER FLAME DETECTOR SWITCH MAINTENANCE (Contd)

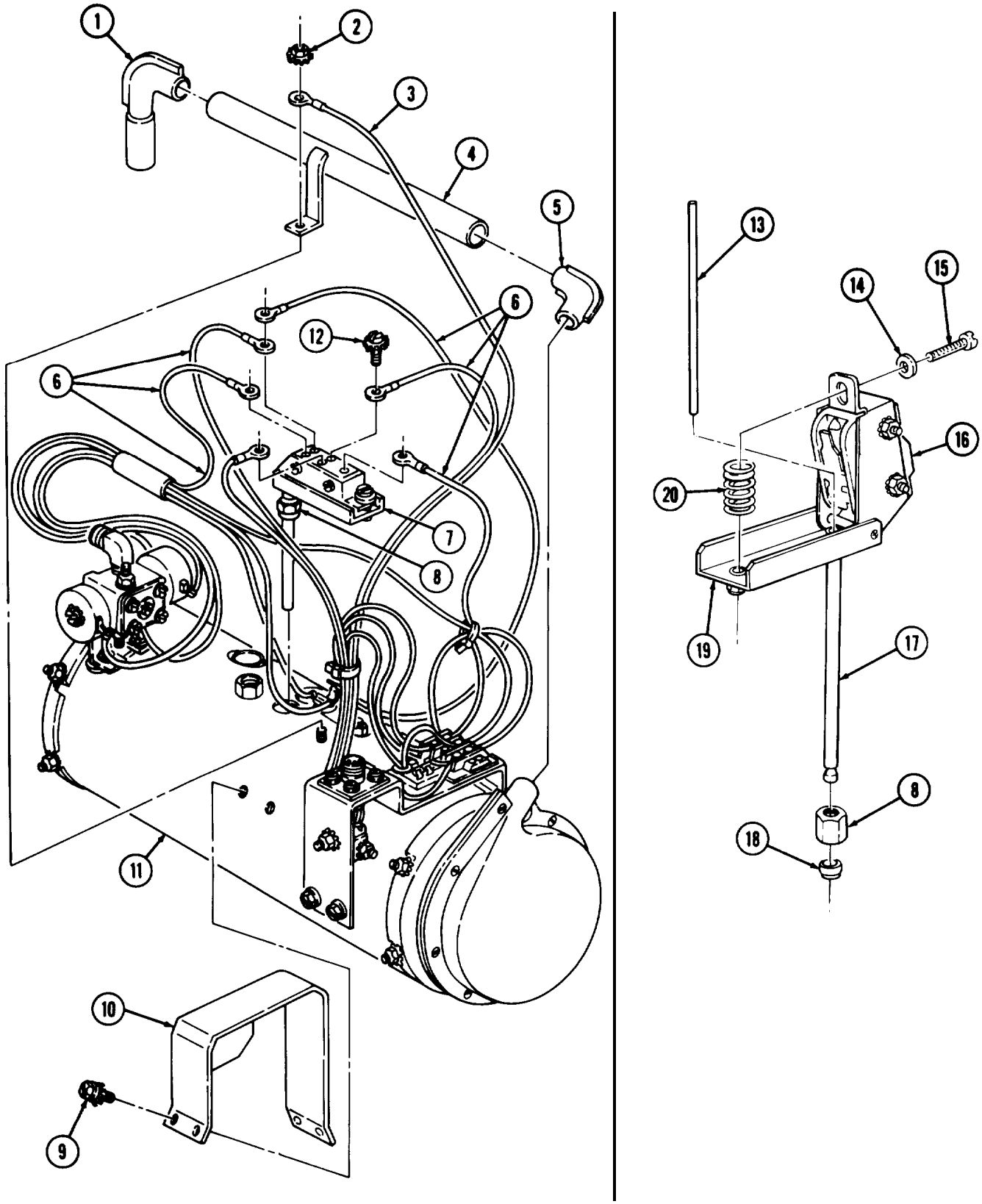

17-3. ENGINE COOLANT HEATER FUME DETECTOR SWITCH MAINTENANCE (Contd)

d. Assembly

1. Install nut (6) and new sleeve (7) on probe (5).

CAUTION

Ceramic rod is very brittle and is easily broken; handle carefully.

2. Tilt microswitch (4) back on mount (8) and insert ceramic rod (1) into probe (5).
3. Rotate microswitch (4) back on mount (8) and install with spring(9), washer (3), and adjusting screw(2)
4. Tighten adjusting screw (2) until microswitch (4) clicks. Then continue three-quarters turn past click point.
5. Apply insulation varnish to adjusting screw (2) to hold in place.

e. Installation

1. Install flame detector switch (18) on heater housing (17) and tighten nut (6).
2. Install six leads (20) on flame detector switch (18) with five new screw-assembled lockwashers (19).
3. Install air tube (13), elbows (10) and (14) and ground lead (12) on heater housing (17) with nut-assembled lockwasher (11).
4. Install guard (16) on heater housing (17) with four new screw-assembled lockwashers (15).

17-3. ENGINE COOLANT HEATER FLAME DETECTOR SWITCH MAINTENANCE (Contd)

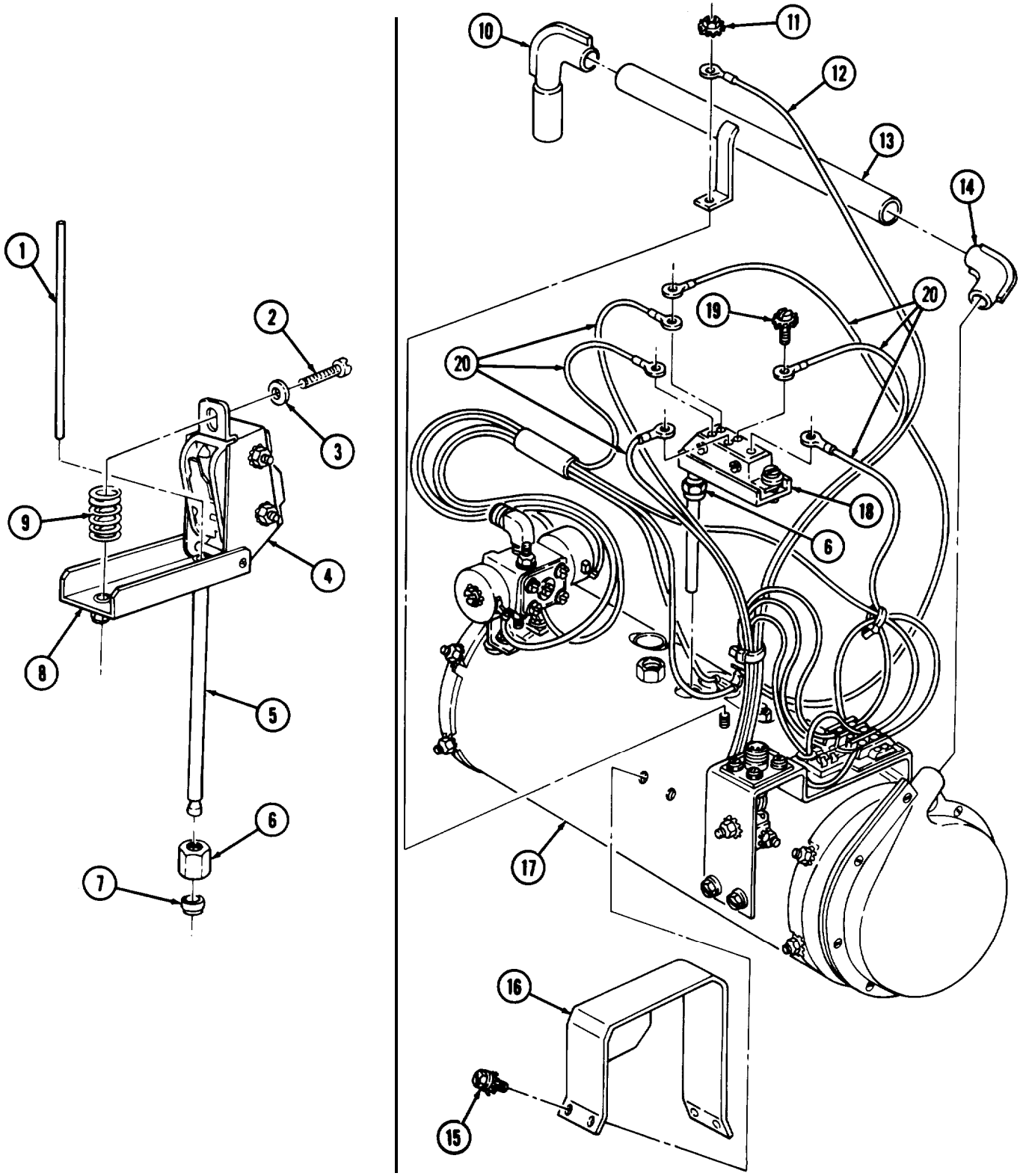

FOLLOW-ON TASK Test engine coolant heater (para. 17-12).

17-4. ENGINE COOLANT HEATER BLOWER MOTOR MAINTENANCE

THIS TASK COVERS:

a. Removal
b. Cleaning and Inspection
c. Installation

INITIAL SETUP

APPLICABLE MODELS
All

TEST EQUIPMENT
Multimeter (Appendix B, Item 115)

Tools
General mechanic's tool kit (Appendix B, Item 1)
Tool kit, electrical (Appendix B, Item 106)

MATERIALS/PARTS
Four screw-assembled lockwashers (Appendix D, Item 405)
Screw-assembled lockwasher (Appendix D, Item 384)
Tiedown strap (Appendix C, Item 28)
Drycleaning solvent (Appendix C, Item 48)
Rag (Appendix C, Item 32)

REFERENCES (TM)
TM 9-2320-260-20
TM 9-2320-260-34P-2

EQUIPMENT CONDITION
Engine coolant heater removed (TM 9-2320-260-20).

GENERAL SAFETY INSTRUCTIONS
- Keep fire extinguisher nearby when using drycleaning solvent.
- Compressed air source will not exceed 30 psi (207 kPa).
- Eyeshields must be worn when cleaning with compressed air.

NOTE
Tag wires for installation.

a. Removal

1. Remove four screw-assembled lockwashere (11) and guard (12) from heater housing (13). Discard screw-assembled lockwashers (11).
2. Remove tiedown strap (6) from heater wiring. Discard tiedown strap (6).
3. Remove nut-assembled lockwasher (2), ground lead (3), air tube (4), and elbows (1) and (5) from heater housing (13).
4. Remove screw-assembled lockwasher (8) and wire (7) from heater component bracket (14). Discard screw-assembled lockwasher (8).
5. Remove four nut-assembled lockwashers (10) and blower motor (9) from heater housing (13).

b. Cleaning and Inspection

1. Inspect blower motor (9) for dirt, grease, and carbon. Remove all dirt, grease, and carbon.

17-4. ENGINE COOLANT HEATER BLOWER MOTOR MAINTENANCE (Contd)

WARNING

- Drycleaning solvent is flammable and will not be used near open flame. Use only in well-ventilated places. Failure to do so may result in injury to personnel,
- Compressed air source will not exceed 30 psi (207 kPa). When cleaning with compressed air, eyeshields must be worn. Failure to wear eyeshields may result in injury to personnel.

2. Clean housing (13) surface with drycleaning solvent and dry with clean rag or compressed air. Do not immerse in solvent.

c. Installation

1. Install blower motor (9) on heater housing (13) with four nut-assembled lockwashers (10).
2. Install wire (7) on heater component bracket (14) with new screw-assembled lockwasher (8).
3. Install elbows (1) and (5), air tube (4), and ground lead (3) on heater housing (13) with nut-assembled lockwasher (2).
4. Place new tiedown strap (6) around heater wiring.
5. Install guard (12) on heater housing (13) with four new screw-assembled lockwashers (11).

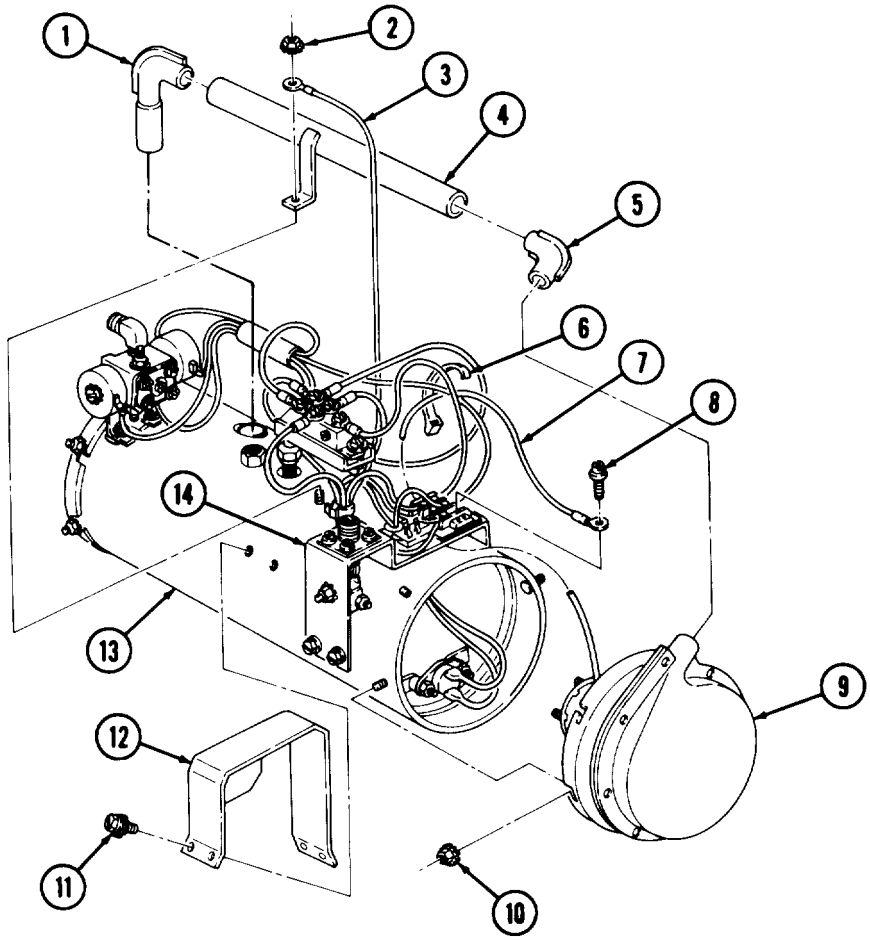

FOLLOW-ON TASK: Test engine coolant heater (para. 17-12).

17-5. ENGINE COOLANT HEATER RESTRICTION THERMOSTAT MAINTENANCE

THIS TASK COVERS:

a. Removal
b. Inspection
c. Installation

INITIAL SETUP

APPLICABLE MODELS
All

TEST EQUIPMENT
Multimeter (Appendix B, Item 115)

TOOLS
General mechanic's tool kit (Appendix B, Item 1)
Tool kit, electrical (Appendix B, Item 106)

REFERENCES (TM)
TM 9-2320-260-34P-2

EQUIPMENT CONDITION
Engine coolant heater blower motor removed (para. 17-4).

a. Removal

NOTE

Tag wires for installation.

1. Disconnect two leads (1) from restriction thermostat (4).
2. Remove two nut-assembled lockwashers (2), washers (3), restriction thermostat (4), and two spacers (5) from heat exchanger (6).

b. Inspection

1. Inspect restriction thermostat (4) for corrosion and bends. Replace if corroded or bent.
2. Check thermostat continuity at room temperature. If continuity exists, replace restriction thermostat (4).

CAUTION

Do not place thermostat in liquid for cooling. Placing thermostat in liquid will cause damage to equipment.

3. Cool restriction thermostat (4) to 20°F (-6.7°C). Check thermostat continuity. If continuity does not exist, replace restriction thermostat (4).

c. Installation

1. Install two spacers (5) and restriction thermostat (4) on heat exchanger (6) with two washers (3) and nut-assembled lockwashers (2).
2. Connect two leads (1) to restriction thermostat (4).

17-5. ENGINE COOLANT HEATER RESTRICTION THERMOSTAT MAINTENANCE (contd)

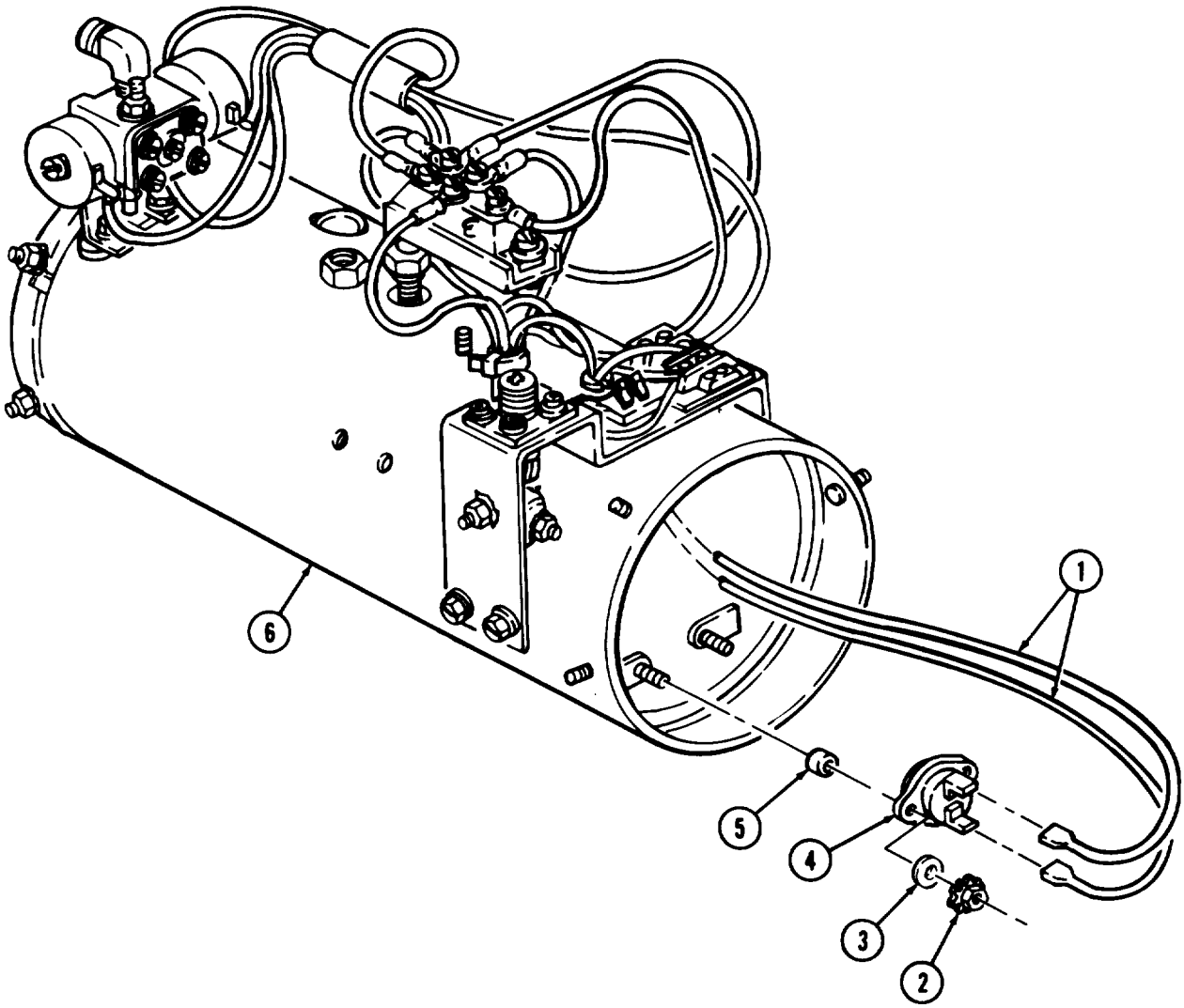

FOLLOW-ON TASK: Install engine coolant heater blower motor (para. 17-4).

17-6. ENGINE COOLANT HEATER COMPONENT BRACKET MAINTENANCE

THIS TASK COVERS:

a. Removal
b. Disassembly
c. Inspection
d. Assembly
e. Installation

INITIAL SETUP

APPLICABLE MODELS
All

TEST EQUIPMENT
Multimeter (Appendix B, Item 115)

Tools
General mechanic's tool kit (Appendix B, Item 1)
Tool kit, electrical (Appendix B, Item 106)

MATERIALS/PARTS
Five screw-assembled lockwashers (Appendix D, Item 388)
Three screw-assembled lockwashers (Appendix D, Item 390)
Four screw-assembled lockwashers (Appendix D, Item 405)

MATERIALS/PARTS (Contd)
Four screw-assembled lockwashers (Appendix D, Item 392)
Four screw-assembled lockwashers (Appendix D, Item 394)
Tiedown strap (Appendix C, Item 28)

REFERENCES (TM)
TM 9-2320-260-34P-2

EQUIPMENT CONDITION
Engine coolant heater blower motor removed (para. 17-4).

NOTE
Tag wires for installation.

a. Removal

1. Remove tiedown strap (4) from wires. Discard tiedown strap (4).
2. Remove two screw-assembled lockwashers (7), and leads (5), (6), and (8) from heater component bracket (9). Discard screw-assembled lockwashers (7).
3. Remove two leads (11) from restriction thermostat (12).
4. Remove grommet (14) and two leads (11) from heater housing (13).
5. Remove three screw-assembled lockwashers (2) and leads (1), (3), (16), and (17) from flame detector switch (15). Discard screw-assembled lockwashers (2).
6. Remove four screw-assembled lockwashers (10) and heater component bracket (9) from heater housing (13). Discard screw-assembled lockwashers (10).

b. Disassembly

NOTE
Note direction of arrow on diode for installation.

1. Remove diode (19) from diode holder (18).
2. Remove screw-assembled lockwashers (23) and (36), resistor leads (22) and (33), and diode lead (35) from terminal strip (25). Discard screw-assembled lockwashers (23) and (36).
3. Remove screw-assembled lockwasher (21) from diode holder (18) and terminal strip (25). Discard screw-assembled lockwasher (21).
4. Remove screw (20) and diode holder (18) from heater component bracket (9).
5. Remove four screw-assembled lockwashers (24), terminal strip (25), and spacer (26) from heater component bracket (9). Discard screw-assembled lockwashers (24).

17-6. ENGINE COOLANT HEATER COMPONENT BRACKET MAINTENANCE (Contd)

6. Remove nut-assembled lockwasher (30), screw (34), and resistor (32) from resistor holder (31).
7. Remove four screw-assembled lockwashers (29) and receptacle (28) from heater component bracket (9). Discard screw-assembled lockwashers (29).
8. Remove nut-assembled lockwasher (27) and resistor holder(31) from heater component bracket (9),

c. Inspection

1. Check diode (19) for continuity. Reverse leads on diode (19) and check for continuity. If circuit is open in both test conditions or closed in both test conditions, replace diode (19).
2. Check resistor (32) for continuity. If continuity does not exist, replace resistor (32).

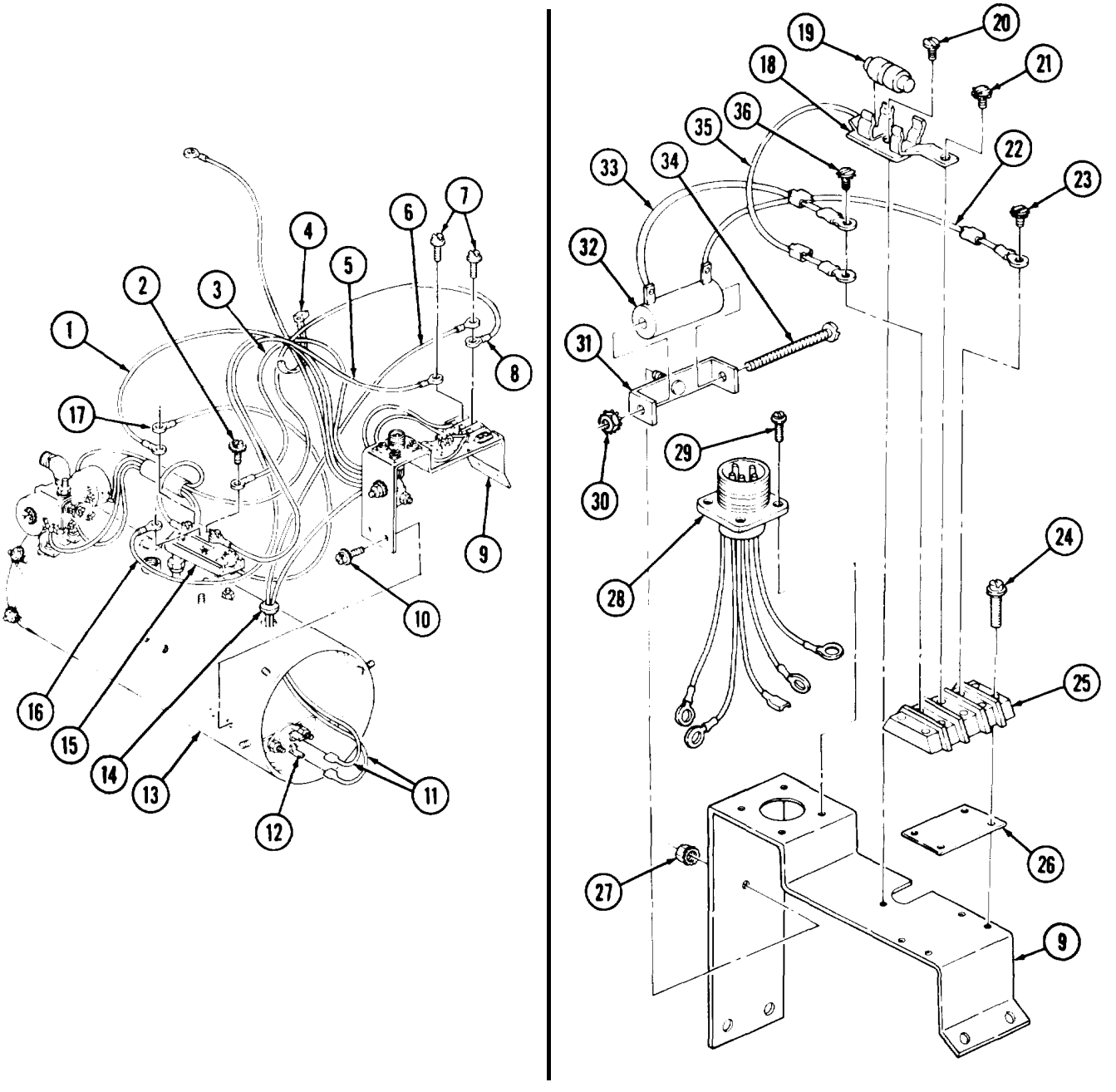

17-6. ENGINE COOLANT HEATER COMPONENT BRACKET MAINTENANCE (Contd)

d. Assembly

1. Install receptacle (11) on heater component bracket (9) with four new screw-assembled lockwashers (12).
2. Install resistor holder (14) on heater component bracket (9) with nut-assembled lockwasher (10).
3. Install resistor (15) on resistor holder (14) with screw (17) and nut-assembled lockwasher (13).
4. Install spacer (8) and terminal strip (7) on heater component bracket (9) with four new screw-assembled lockwashers (6).
5. Install diode holder (20) on heater component bracket (9) with screw (2).
6. Install diode (1) on diode holder (20) with arrow pointed in direction previously noted.
7. Install resistor leads (4) and (16), diode lead (19), and diode holder (20) on terminal strip (7) with new screw-assembled lockwashers (18), (5), and (3).

e. Installation

1. Install heater component bracket (9) on heater housing (33) with four new screw-assembled lockwashers (30).
2. Install leads (26), (27), and (29) on heater component bracket (9) with two new screw-assembled lockwashers (28).
3. Install leads (21), (22), (24), and (36) on flame detector switch (35) with three new screw-assembled lockwashers (23).
4. Insert two leads (31) through hole in heater housing (33) and install on restriction thermostat (32).
5. Place grommet (34) on two leads (31) and install on heater housing (33).
6. Install new tiedown strap (25) around wires.

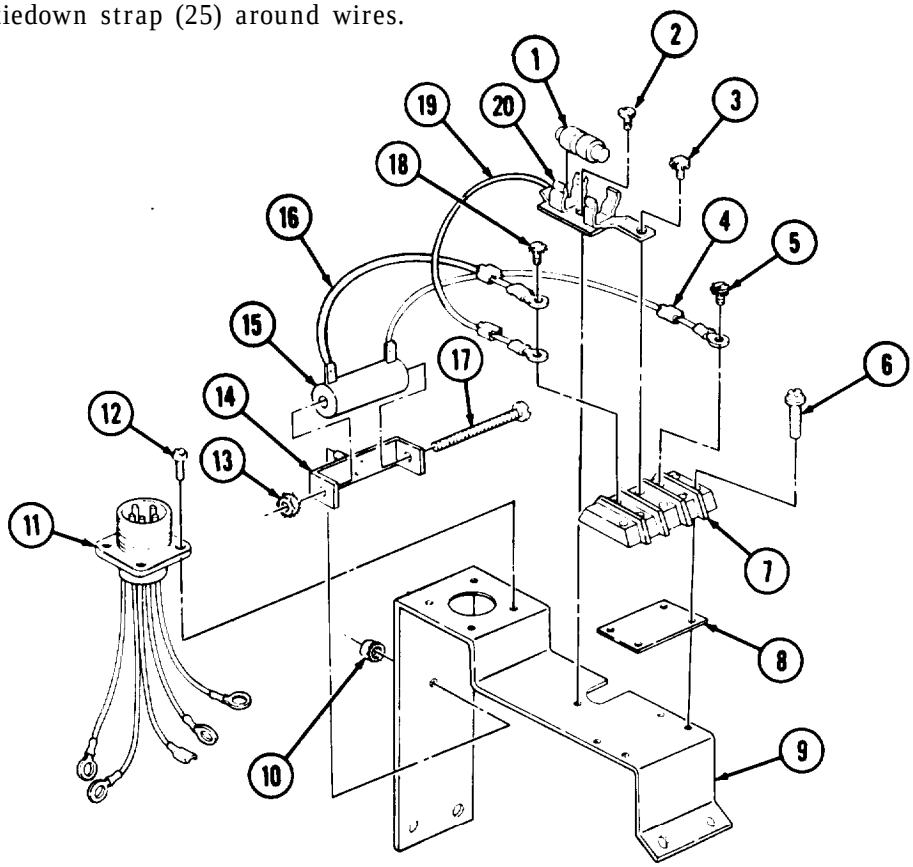

17-6. ENGINE COOLANT HEATER COMPONENT BRACKET MAINTENANCE (Contd)

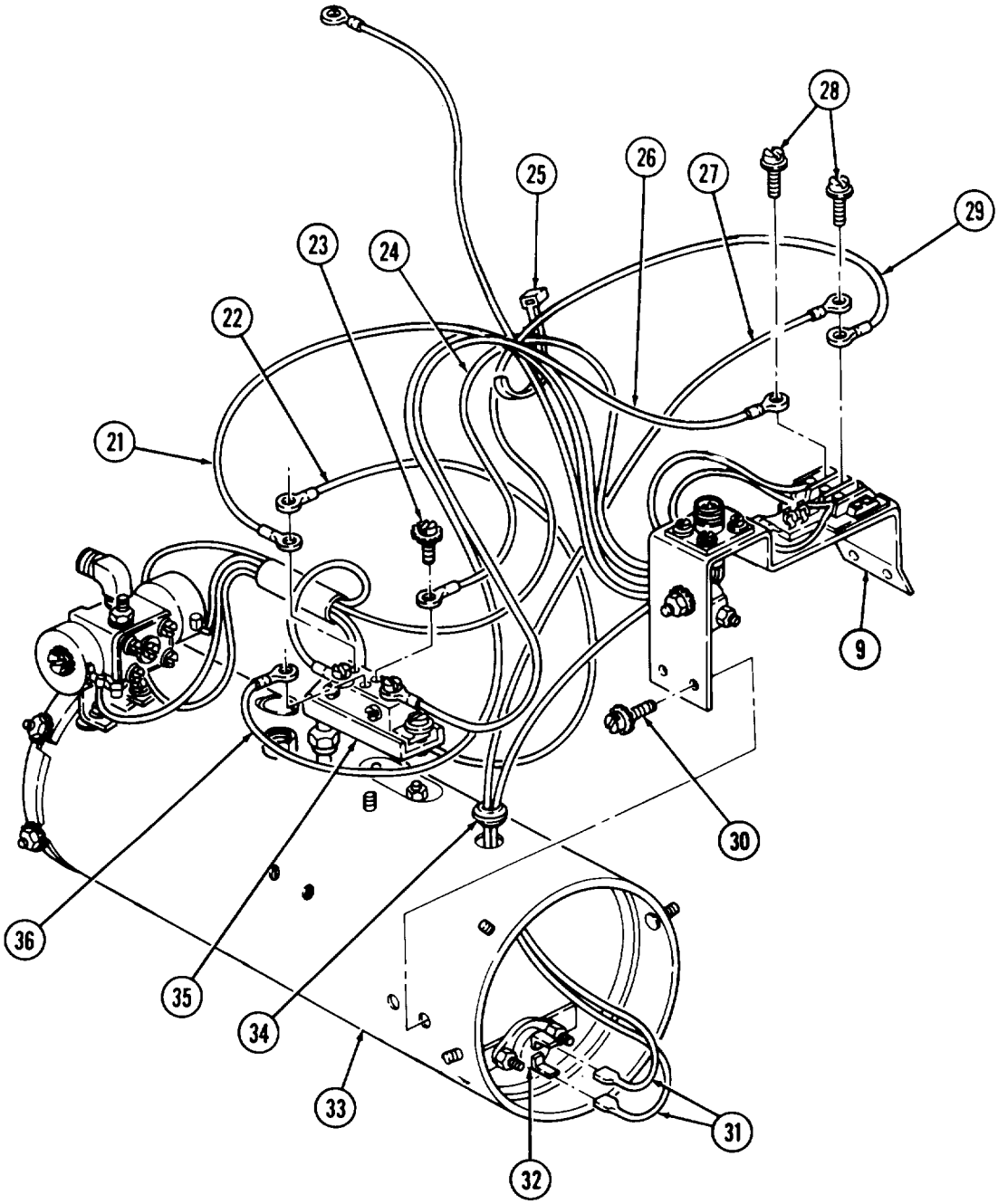

FOLLOW-ON TASK: Install engine coolant heater blower motor (para. 17-4).

17-7. ENGINE COOLANT HEATER FUEL CONTROL VALVE REPLACEMENT

THIS TASK COVERS:

a. Removal

b. Installation

INITIAL SETUP

APPLICABLE MODELS
All

TEST EQUIPMENT
Multimeter (Appendix B, Item 115)

TOOLS
General mechanic's tool kit (Appendix B, Item 1)
Tool kit, electrical (Appendix B, Item 106)

MATERIALS/PARTS
Four screw-assembled lockwashers (Appendix D, Item 405)
Two screw-assembled lockwashers (Appendix D, Item 396)

MATERIALS/PARTS (Contd)
Screw-assembled lockwasher (Appendix D, Item 390)
Screw-assembled lockwasher (Appendix D, Item 398)

REFERENCES (TM)
TM 9-2320-260-20
TM 9-2320-260-34P-2

EQUIPMENT CONDITION
Engine coolant heater removed (TM 9-2320-260-20).

NOTE
Tag wires for installation.

a Removal

1. Remove four screw-assembled lockwashers (7) and guard (6) from heater housing (8). Discard screw-assembled lockwashers (7).
2. Remove nut-assembled lockwasher (2), ground lead (3), air tube (4), and elbows (1) and (5) from heater housing (8).
3. Disconnect fuel control valve leads (9) and (10) from tab connector (18).
4. Loosen nut (16) and slide down fuel tube (13).
5. Remove screw-assembled lockwasher (22) and lead (21) from heater component bracket (19). Discard screw-assembled lockwasher (22).
6. Remove screw-assembled lockwasher (11) and lead (20) from flame detector switch (17). Discard screw-assembled lockwasher (11).
7. Remove two screw-assembled lockwashers (15) and fuel control valve (12) from fuel tube (13) and bracket (14). Discard screw-assembled lockwashers (15).

b .Installation

1. Position fuel control valve (12) on fuel tube (13) and bracket (14).
2. Tighten nut (16) and install fuel control valve (12) on bracket (14) with two new screw-assembled lockwashers (15).
3. Install lead (21) on heater component bracket (19) with new screw-assembled lockwasher (22).
4. Install lead (20) on flame detector switch (17) with new screw-assembled lockwasher (11).
5. Connect fuel control leads (9) and (10) on tab connector (18).
6. Install air tube (4), elbows (1) and (5), and ground lead (3) on heater housing(8) with nut-assembled lockwashers (2).
7. Install guard (6) on heater housing(8) with four new screw-assembled lockwashers (7).

17-7. ENGINE COOLANT HEATER FUEL CONTROL VALVE REPLACEMENT (Contd)

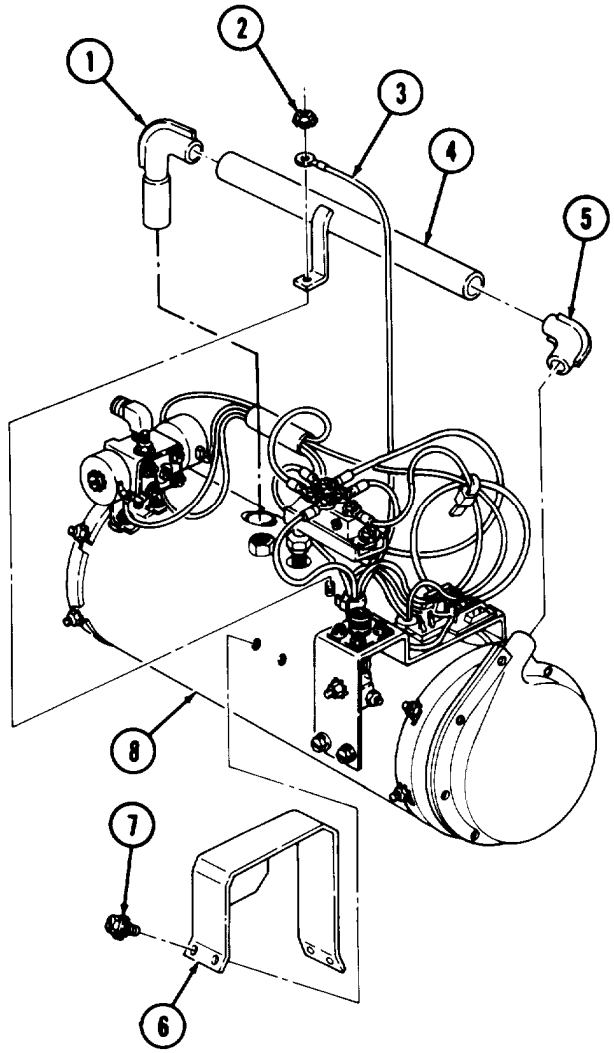

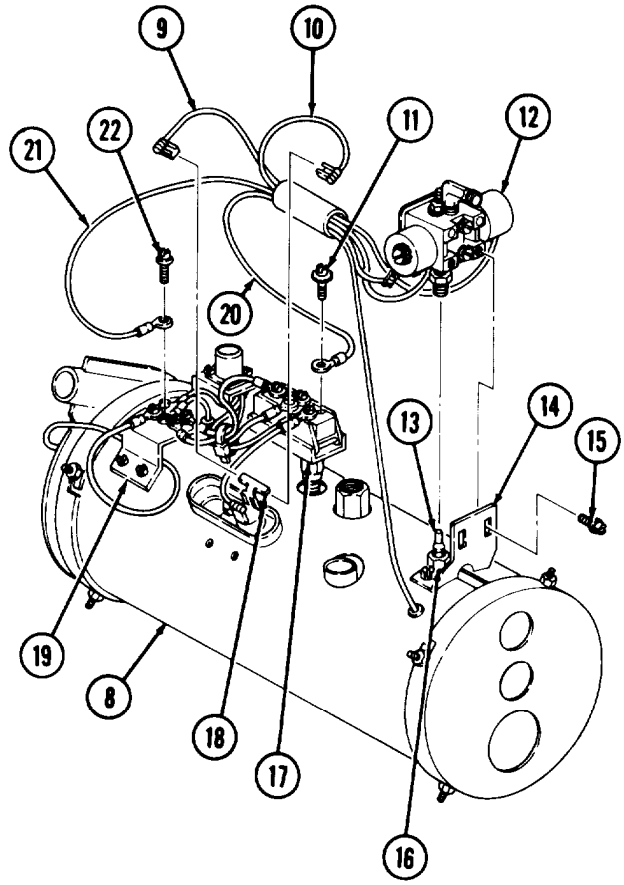

FOLLOW-ON TASK Test engine coolant heater (para. 17-12).

17-8. ENGINE COOLANT HEATER OVERHEAT SWITCH AND IGNITER MAINTENANCE

THIS TASK COVERS:

a. Overheat Switch Removal
b. Igniter Removal
c. Inspection
d. Igniter Installation
e. Overheat Switch Installation

INITIAL SETUP

APPLICABLE MODELS
All

TEST EQUIPMENT
Multimeter (Appendix B, Item 115)

TOOLS
General mechanic's tool kit (Appendix B, Item 1)
Tool kit, electrical (Appendix B, Item 106)

MATERIALS/PARTS
Four screw-assembled lockwashers (Appendix D, Item 405)
Screw-assembled lockwasher (Appendix D, Item 400)

MATERIALS/PARTS (Contd)
Lockwasher (Appendix D, Item 259)
Lockwasher (Appendix D, Item 261)
O-ring (Appendix D, Item 282)
Washer (Appendix D, Item 526)
Gasket (Appendix D, Item 80)
Igniter (Appendix D, Item 158)

REFERENCES (TM)
TM 9-2320-260-20
TM 9-2320-260-34P-2

EQUIPMENT CONDITION
Engine coolant heater removed (TM 9-2320-260-20).

NOTE
Tag all leads for installation.

a. Overheat Switch Removal

1. Remove four screw-assembled lockwashers (6) and guard (7) from heater housing (8). Discard screw-assembled lockwashers (6).
2. Remove nut-assembled lockwasher (2), ground lead (3), air tube (4), and elbows (1) and (5) from heater housing (8).
3. Disconnect lead (9) from overheat switch (13).
4. Disconnect leads (10) and (12) from tab connector (11) and remove tab connector (11) from overheat switch (13).
5. Remove nut (32), lockwasher (31), retainer (30), overheat switch (13), washer (14), and O-ring (15) form heater housing (8). Discard lockwasher (31), O-ring (15), and washer (14).

b. Igniter Removal

1. Remove four nut-assembled lockwashers (27) and end plate (26) from heater housing(8).
2. Remove screw-assembled lockwasher (21), ground strap (22), igniter lead (23), and lockwasher (24) from burner (16). Discard screw-assembled lockwasher (21) and lockwasher (24).
3. Remove nut (28) and ground strap (22) from stud (29).

17-8. ENGINE COOLANT HEATER OVERHEAT SWITCH AND IGNITER MAINTENANCE (Contd)

CAUTION

Igniter is fragile. Use care when removing igniter. Failure to do so may result in damage to equipment.

4. Remove nuts (19) and (18), preheater resistor strap (17), igniter (20), and gasket (25) from burner (16), Discard igniter (20) and gasket (25).

c. Inspection

Test overheat switch (13) for continuity. If continuity does not exist, replace overheat switch (13).

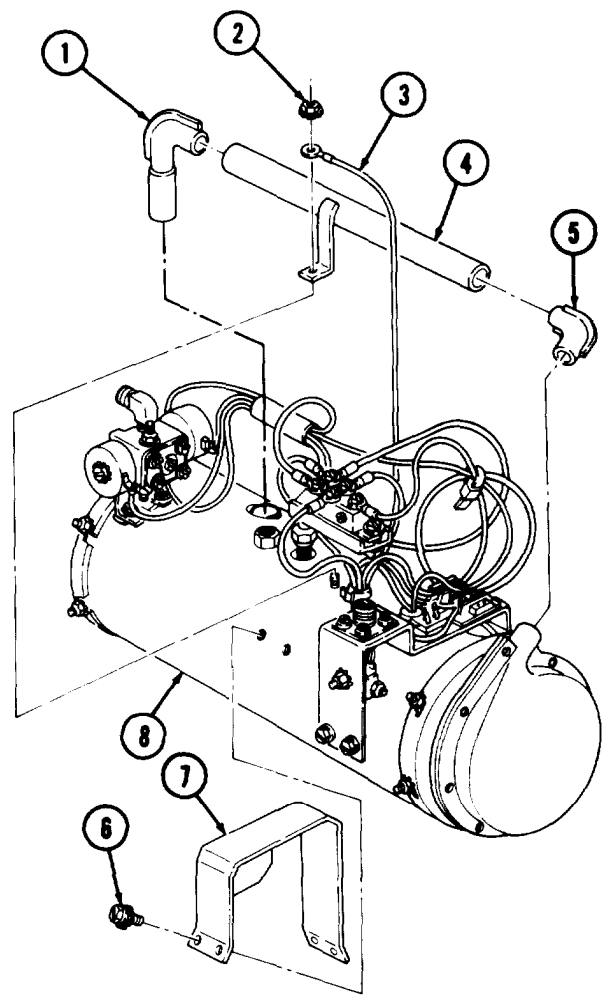

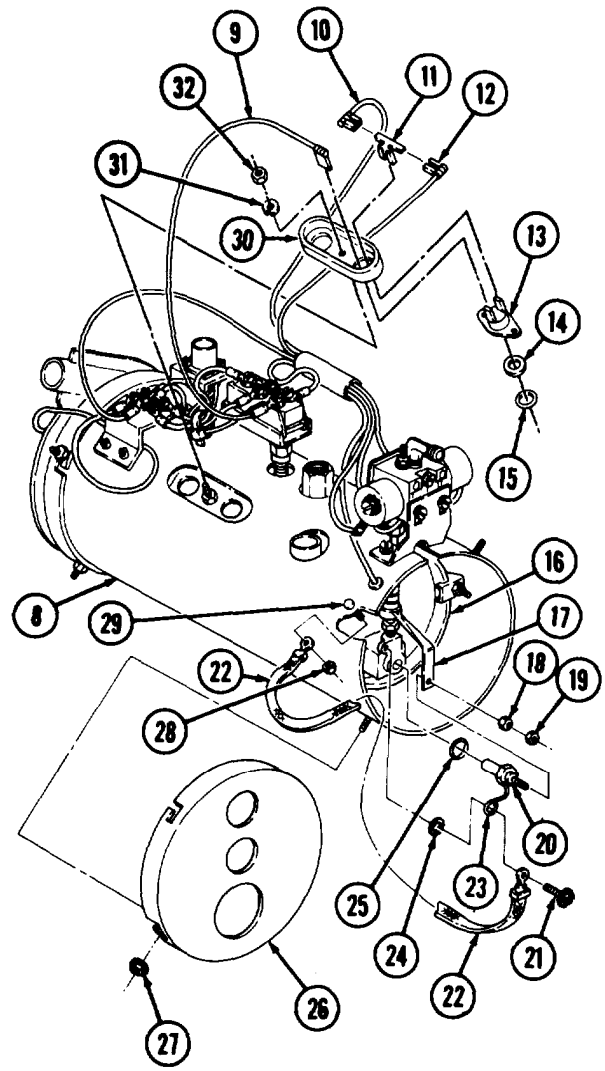

17-8. ENGINE COOLANT HEATER OVERHEAT SWITCH AND IGNITER MAINTENANCE (Contd)

d. Igniter Installation

CAUTION

Igniter is fragile. Use care when installing igniter. Failure to do so may result in damage to equipment.

1. Install new gasket (17) and new igniter (12) on burner (8).
2. Place preheater resistor strap (9) on igniter (12) and install with two nuts (10) and (11).
3. Install ground strap (14) on stud (21) with nut (20).
4. Install new lockwasher (16), igniter lead (15), and ground strap (14) on burner (8) with new screw-assembled lockwasher (13),
5. Install end plate (18) on heater housing (22) with four nut-assembled lockwashers (19).

e. Overheat Switch Installation

1. Install new O-ring (7), new washer (6), overheat switch (5), and retainer (23) on heater housing (22) with new lockwasher (24) and nut (25).
2. Install leads (2) and (4) on tab connector (3) and install tab connector (3) on overheat switch (5).
3. Install lead (1) on overheat switch (5).
4. Install air tube (29), elbows (26) and (30), and ground lead (28) on heater housing (22) with nut-assembled lockwasher (27).
5. Install guard (32) on heater housing (22) with four new screw-assembled lockwashers (31).

17-8. ENGINE COOLANT HEATER OVERHEAT SWITCH AND IGNITER MAINTENANCE (Contd)

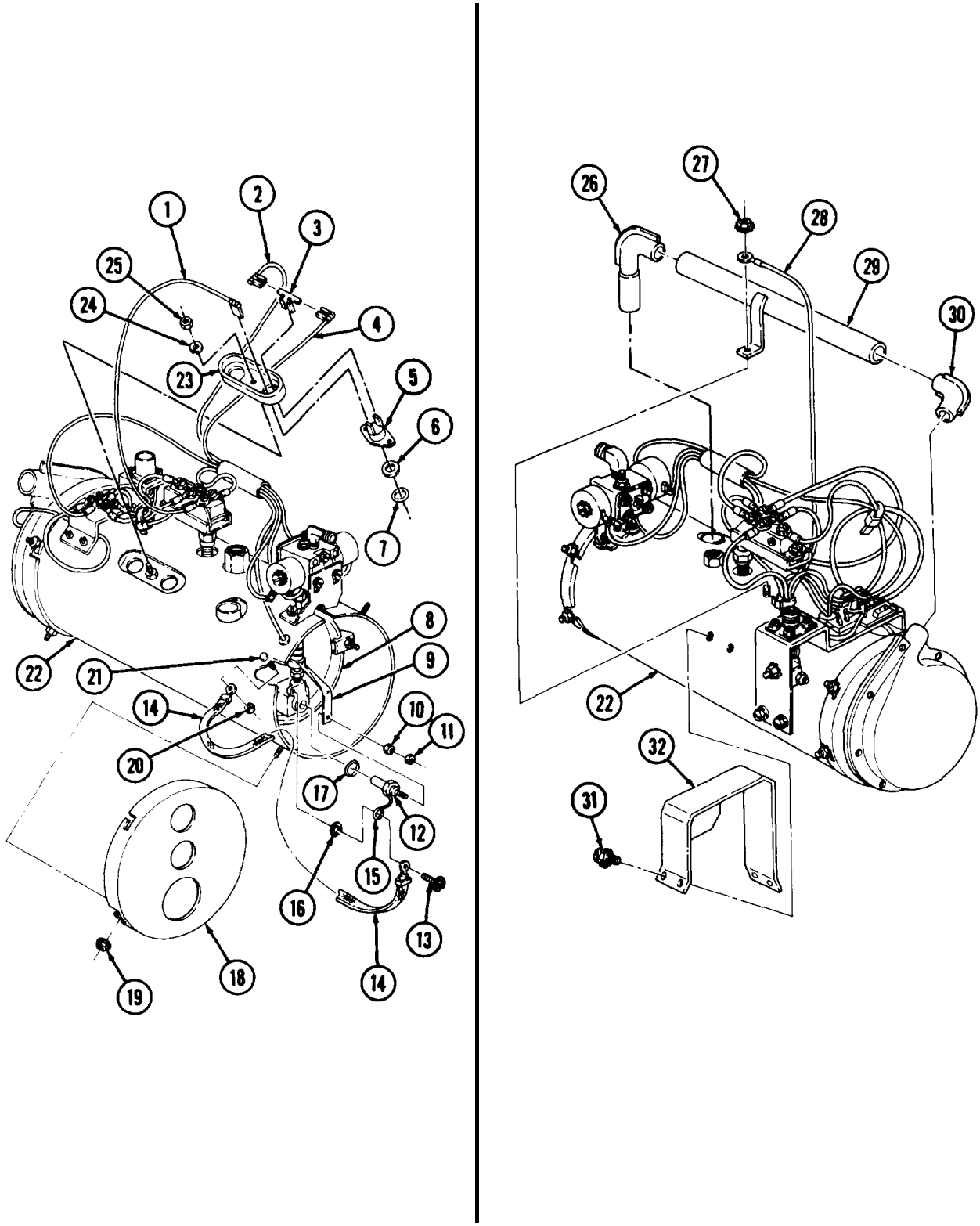

FOLLOW-ON TASK: Test engine coolant heater (para. 17-12).

17-9. ENGINE COOLANT HEATER FUEL TUBE AND PREHEAT RESISTOR REPLACEMENT

THIS TASK COVERS:

a. Removal

b. Installation

INITIAL SETUP

APPLICABLE MODELS
All

TEST EQUIPMENT
Multimeter (Appendix B, Item 115)

TOOLS
General mechanic's tool kit (Appendix B, Item 1)
Tool kit, electrical (Appendix B, Item 106)

MATERIALS/PARTS
Sleeve (Appendix D, Item 508)
Screw-assembled lockwasher (Appendix D, Item 388)

REFERENCES (TM)
TM 9-2320-260-34P-2

EQUIPMENT CONDITION
- Engine coolant heater fuel control valve removed (para. 17-7).
- Engine coolant heater overheat switch and igniter removed (para. 17-8).

NOTE
Tag wires for installation.

a. Removal

1. Remove two screws (l), bracket (2), flange (3), and tapping plate (4) from heater housing (15).
2. Remove grommet (14) from hole (13) in heater housing (15) and slide up on lead (10).
3. Remove nut-assembled lockwasher (5), screw-assembled lockwasher (9), and lead (10) from preheat resistor (8). Discard screw-assembled lockwaeher (9).
4. Remove fuel tube (11) with preheat resistor (8) from burner (12).
5. Remove sleeve (6), nut(7), and preheat resistor (8) from fuel tube (11). Discard sleeve (6).

b. Installation

1. Install preheat resistor (8), nut (7), and new sleeve (6) on fuel tube (11).
2. Install fuel tube (11) with preheat resistor (8) on burner (12).
3. Insert lead (10) through hole (13) in heater housing (15) and install on preheat resistor (8) with new screw-assembled lockwasher (9) and nut-assembled lockwasher (5).
4. Install grommet (14) in hole (13) on heater housing (15).
5. Position tapping plate (4), flange (3), and bracket (2) on heater housing (15) and install with two screws (1).

17-9. ENGINE COOLANT HEATER FUEL TUBE AND PREHEAT RESISTOR REPLACEMENT (Contd)

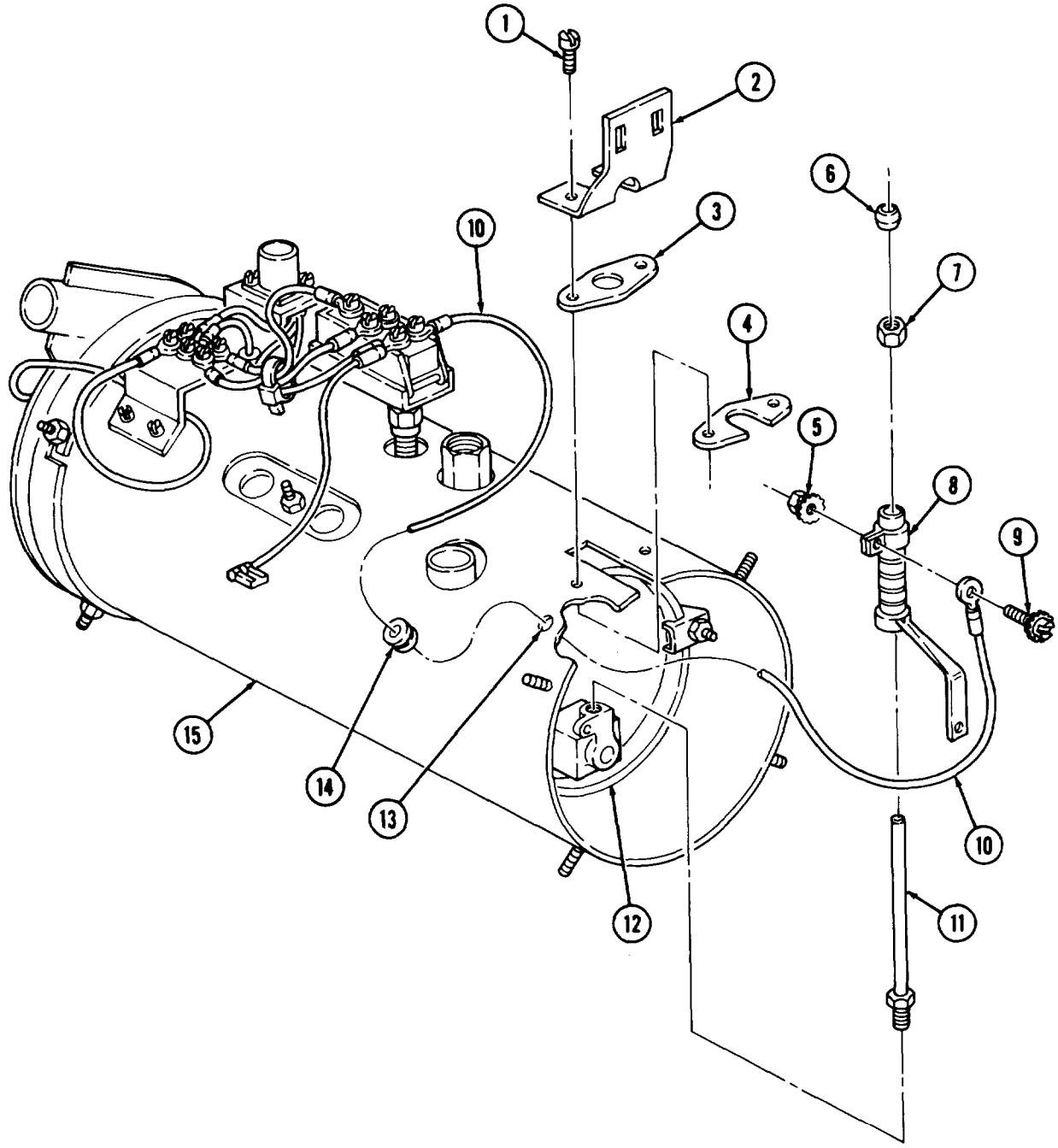

FOLLOW-ON TASKS: •Install engine coolant heater overheat switch and igniter (para. 17-8).
•Install engine cooant heater fuel control valve (para. 17-7).

17-10. ENGINE COOLANT HEATER BURNER MAINTENANCE

THIS TASK COVERS:

a. Removal
b. Cleaning and Inspection
c. Installation

INITIAL SETUP

APPLICABLE MODELS
All

TEST EQUIPMENT
Multimeter (Appendix B, Item 115)

TOOLS
General mechanic's tool kit (Appendix B, Item 1)
Tool kit, electrical (Appendix B, Item 106)

MATERIALS/PARTS
O-ring (Appendix D, Item 283)
Gasket (Appendix D, Item 106)
Drycleaning solvent (Appendix C, Item 48)

REFERENCES (TM)
TM 9-2320-260-34P-2

EQUIPMENT CONDITION
Engine coolant heater fuel tube and preheat resistor removed (para. 17-9).

GENERAL SAFETY INSTRUCTIONS
- Keep fire extinguisher nearby when using drycleaning solvent.
- Compressed air source will not exceed 30 psi (207 kPa).
- Eyeshields must be worn when cleaning with compressed air.

a. REMOVAL

Remove four nuts (5), clamps (6), hook bolts (7), burner (4), O-ring (3), and gasket (2) from heat exchanger (1). Discard O-ring (3) and gasket (2).

b. Cleaning and Inspection

WARNING

- Drycleaning solvent is flammable and will not be used near open flame. Use only in well-ventilated places. Failure to do so may result in injury to personnel.
- Compressed air source will not exceed 30 psi (207 kPa). When cleaning with compressed air, eyeshields must be worn. Failure to wear eyeshields may result in injury to personnel.

Inspect burner (4) for scorched and charred surfaces. If scorched or charred, clean burner (4) surfaces with wire brush, wipe clean with drycleaning solvent, and dry. Replace burner (4) if insulating pad is charred or parts are missing.

c. Installation

Position new gasket (2), new O-ring (3), and burner (4) on heat exchanger (1) and install with four hook bolts (7), clamps (6), and nuts (5).

17-10. ENGINE COOLANT HEATER BURNER MAINTENANCE (Contd)

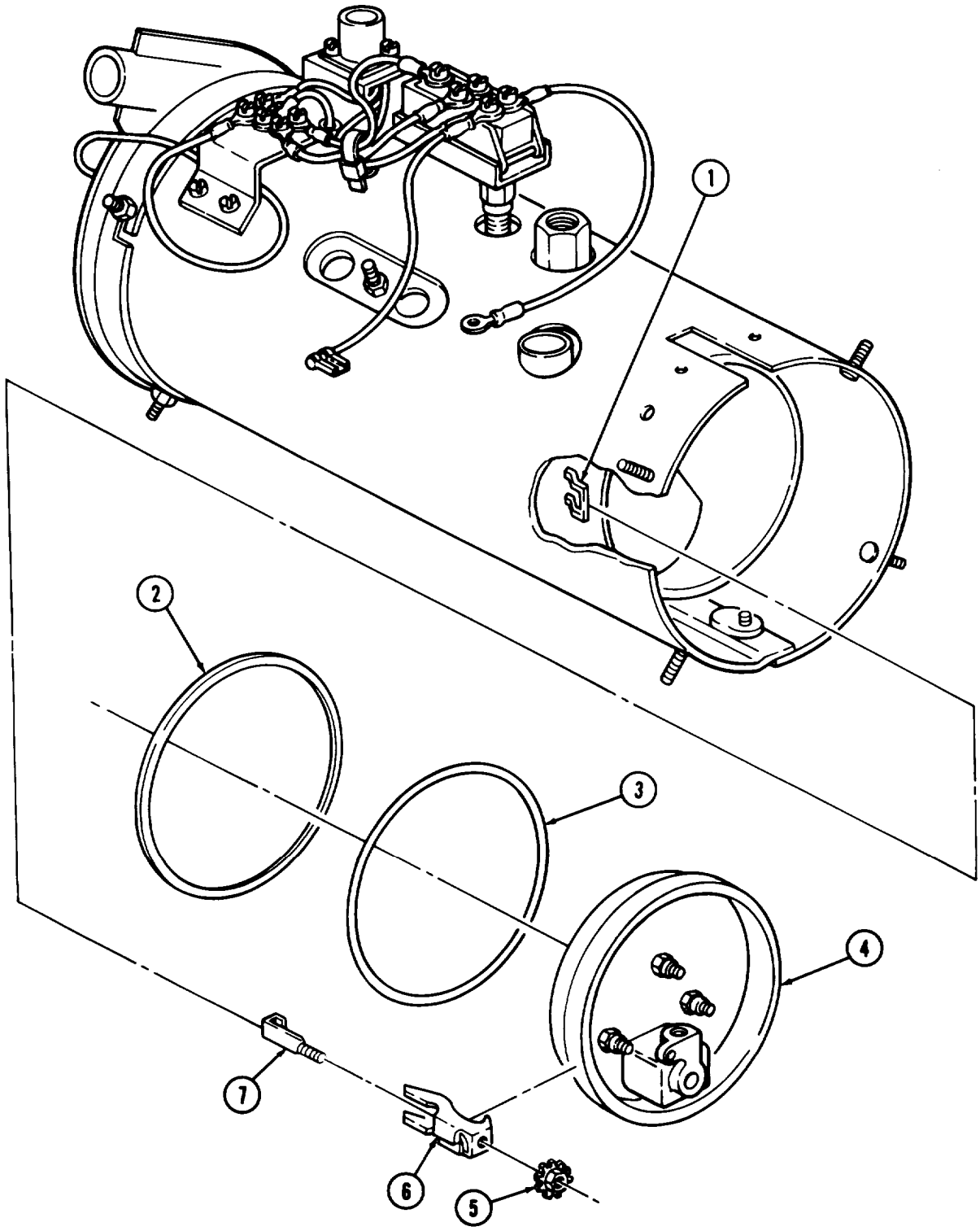

FOLLOW-ON TASK: Install engine coolant heater fuel tube and preheat resistor (para. 17-9).

17-11. ENGINE COOLANT HEATER HOUSING AND HEAT EXCHANGER MAINTENANCE

THIS TASK COVERS:

a. Removal
b. Cleaning and Inspection
c. Installation

INITIAL SETUP

APPLICABLE MODELS
All

TOOLS
General mechanic's tool kit (Appendix B, Item 1)

MATERIALS/PARTS
Three screw-assembled lockwashers (Appendix D, Item 405)
Drycleaning solvent (Appendix C, Item 46)

REFERENCES (TM)
TM 9-2320-260-34P-2

EQUIPMENT CONDITION
- Engine coolant heater flame detector switch removed (para. 17-3).
- Engine coolant heater restriction thermostat removed (para. 17-5).
- Engine coolant heater burner removed (para. 17-10).

GENERAL SAFETY INSTRUCTIONS
- Compressed air source will not exceed 30 psi (207 kPa).
- Eyeshields must be worn when cleaning with compressed air.
- Keep fire extinguisher nearby when using drycleaning solvent.

a. Removal

1. Remove three screw-assembled lockwashers (2) from heater housing (1). Discard screw-assembled lockwashers (2).
2. Separate heater housing (1) and remove heat exchanger (5) from heater housing (1).

b. Cleaning and Inspection

WARNING

- Compressed air source will not exceed 30 psi (207 kPa). When cleaning with compressed air, eyeshields must be worn. Failure to wear eyeshields may result in injury to personnel.
- Drycleaning solvent is flammable and will not be used near open flame. Use only in well-ventilated places. Failure to do so may result in injury to personnel.

1. Inspect heat exchanger (5) for exterior damage, leaks, and corrosion. Replace heat exchanger (5) if damaged, heavily corroded, or leaks are present. To remove carbon from heat exchanger (5), soak in water for a short time and dry with compressed air.
2. Clean housing (1) surface with drycleaning solvent and dry with clean rag or compressed air.

c. Installation

Ensure flame detector switch adapter (3) and exhaust tube (4) are alined and install heat exchanger (5) in heater housing (1) with three new screw-assembled lockwashers (2).

17-11. ENGINE COOLANT HEATER HOUSING AND HEAT EXCHANGER MAINTENANCE (Contd)

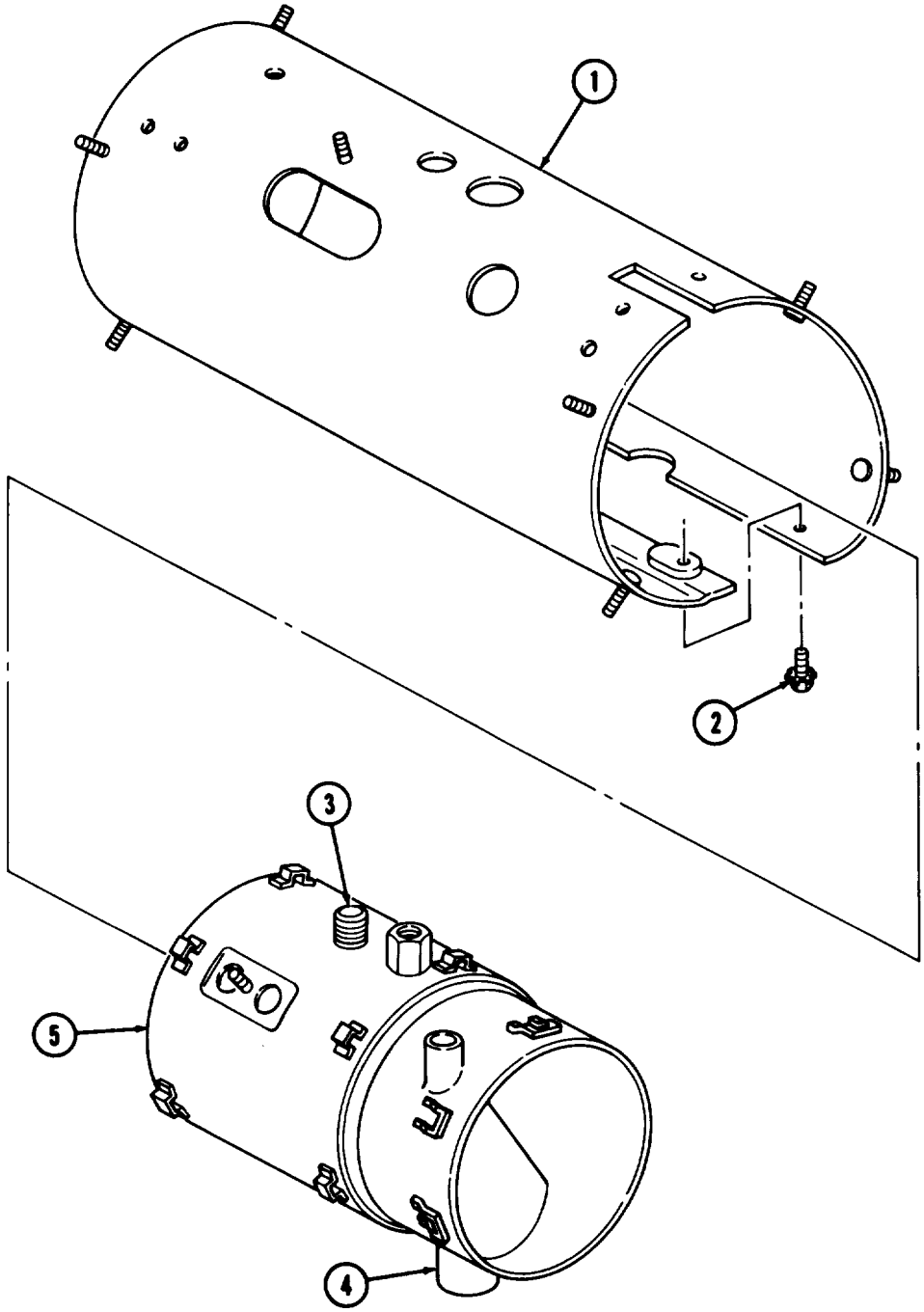

FOLLOW-ON TASKS:
- Install engine coolant heater burner (para. 17-10).
- Install engine coolant heater restriction thermostat (para. 17-5).
- Install engine coolant heater flame detector switch (para. 17-3).

17-12. ENGINE COOLANT HEATER TESTING

THIS TASK COVERS:

a. Preparation
b. Igniter Test
c. Flame Detector Switch Test
d. Fuel Control Valve Test
e. Blower Motor Test
f. Restriction Thermostat Test
g. Overheat Switch Test
h. Test Equipment Removal

INITIAL SETUP

APPLICABLE MODELS
All

TEST EQUIPMENT
24-volt DC power source
Fuel container
Coolant container (5 gal.)
Test stand
Thermometer (Appendix B, Item 147)
Flowmeter (Appendix B, Item 146)
Multimeter (Appendix B, Item 115)

TOOLS
General mechanic's tool kit (Appendix B, Item 1)
Tool kit, electrical (Appendix B, Item 106)

MATERIALS/PARTS
Four screw-assembled lockwashers (Appendix D, Item 405)
Screw-assembled lockwasher (Appendix D, Item 390)
Antifreeze (Appendix C, Item 4)

REFERENCES
TM 9-2320-260-20
TM 9-2320-260-34P-2

EQUIPMENT CONDITION
Engine coolant heater removed (TM 9-2320-260-20).

GENERAL SAFETY INSTRUCTIONS
- Keep fire extinguisher nearby when working with open fuel lines.
- Do not perform procedure near open flame, smoking, or sparking object.
- Do not perform procedure in enclosed areas.
- Do not handle hot heater with bare hands, wear hand protection at all times.
- Do not remove heater from test equipment until cool.

a. Preparation

WARNING

- Do not perform this procedure while smoking or within 50 feet of sparks or open flame. Fuel is flammable and can explode easily, causing injury to personnel and damage to equipment.
- Do not handle hot heater with bare hands; wear hand protection at all times. Failure to do so may cause injury to personnel.
- Exhaust gases can kill. Do not perform this task in enclosed areas. Ensure work area is well-ventilated and exhaust fumes are directed away from test area.

NOTE

- Perform "preparation" subtask before preforming any test and perform "test equipment removal" after each test is complete.
- Heater must be tested in same position as mounted on vehicle.
- Use proper coolant required for engines which are being heated. Water cannot be used because the overheat switch and restriction thermostat are set for temperatures above the boiling point of water.

1. Connect coolant heater (14) to test equipment using schematic on next page.

17-12. ENGINE COOLANT HEATER TESTING (Contd)

NOTE

- Coolant container must be vented and raised above the test apparatus in order for thermosyphon circulation to occur.
- Fuel pump, fuel filter, heater, wiring harness, fuel tubing, control box, and coolant must be the same type used on vehicle.

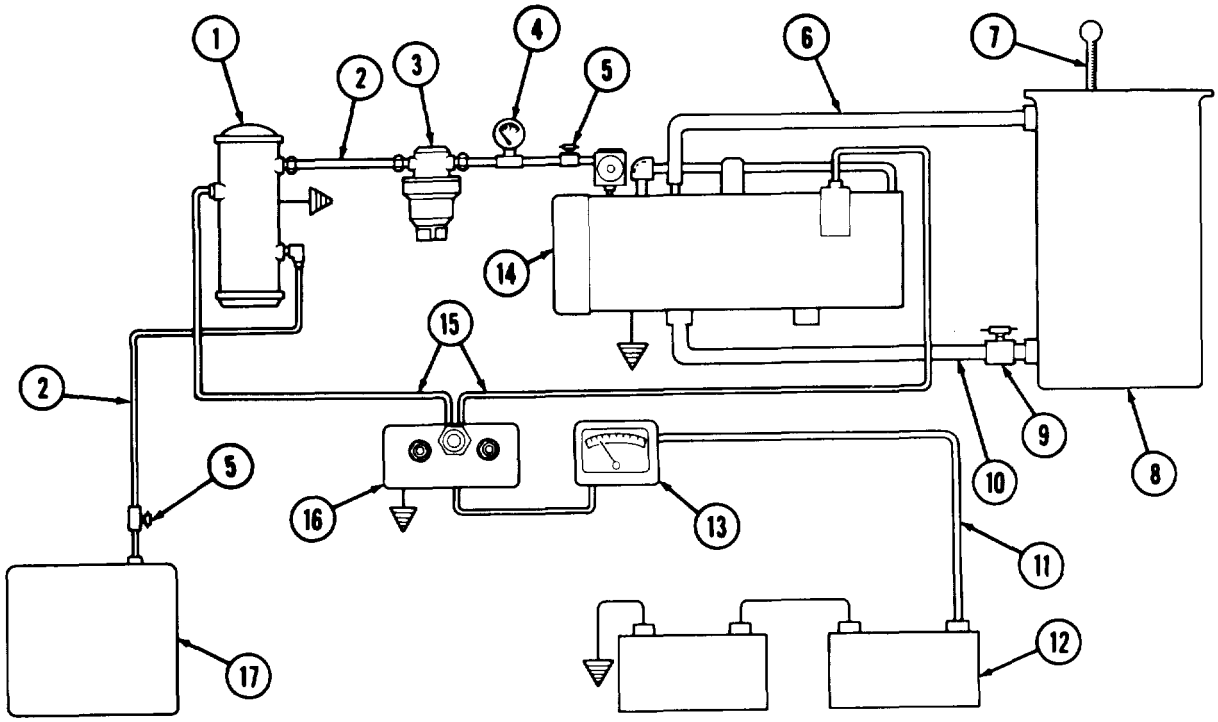

KEY TO TEST EQUIPMENT ARRANGEMENT

1. Electric fuel pump
2. Fuel tubing
3. Fuel filter
4. Fuel flowmeter
5. Fuel shutoff valve
6. Coolant outlet hose
7. Thermometer
8. Coolant container
9. Coolant shutoff valve
10. Coolant inlet hose
11. Power source lead
12. 24-volt DC power source
13. Multimeter
14. Coolant
15. Wiring harness
16. Control box
17. Fuel container

17-12. ENGINE COOLANT HEATER TESTING (Contd)

2. Remove four screw-assembled lockwashers (2) and guard (1) from heater (9). Discard screw-assembled lockwashers (2).
3. Disconnect lead (16) from 24-volt power source (17).
4. Remove screw-assembled lockwasher (11) and igniter lead (12) from flame detector switch (10). Discard screw-assembled lockwasher (11).
5. Disconnect fuel control valve leads (6) and (8) from overheat switch (7).
6. Connect hose (4) to bleed screw (13) on fuel control valve (3) and place other end of hose (4) in container (5).
7. Open two fuel shutoff valves (14).

NOTE

Have drainage container ready to catch fuel.

8. Connect lead (16) to power source (17).
9. Ensure switch (21) is in LO position. Place switch (19) in START position and hold. Open bleed screw (13) and let fuel flow until no air bubbles are observed in fuel flowing into container (5).
10. Place switch (19) in OFF position. Close bleed screw (13).
11, Disconnect lead (16) from power source (17).
12. Install igniter lead (12) on flame detector switch (10) with new screw-assembled lockwasher (11).
13. Connect fuel control valve leads (6) and (8) on overheat switch (7).
14. Open coolant shutoff valve (15).
15. Check for signs of coolant leaks. Tighten loose connections or replace damaged parts if leaking (paras. 17-3 through 17-11, as necessary).
16. Close coolant shutoff valve (15).
17. Connect lead (16) to power source (17).

b. Igniter Test

NOTE

Ignition time is the interval from activating control box switch to START position until indicator lamp illuminates.

1. Place switch (19) in START position and hold. Record time interval fromactivating switch (19) until indicator lamp (20) illuminates. During this time interval, record ignition amperage on multimeter (18).
2. If ignition time exceeds three minutes, or if ignition amperage exceeds 15 amperes, check fuel flow components (paras. 17-3 through 17-11, as necessary).
3. Place switch (19) in OFF position.

17-12. ENGINE COOLANT HEATER TESTING (Contd)

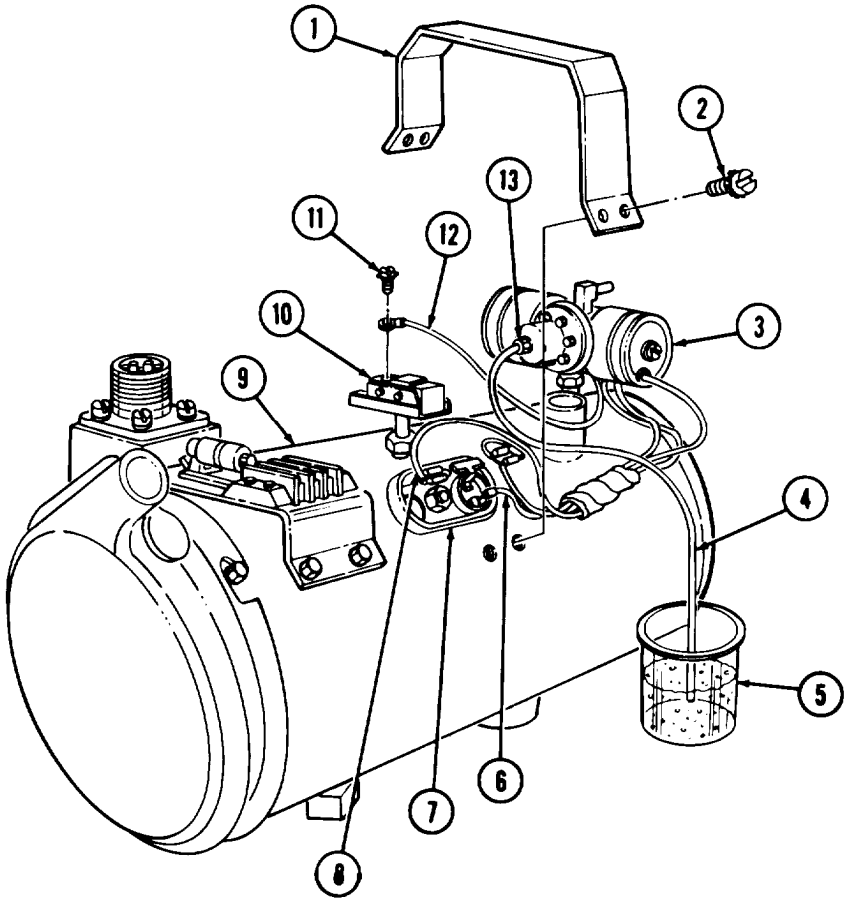

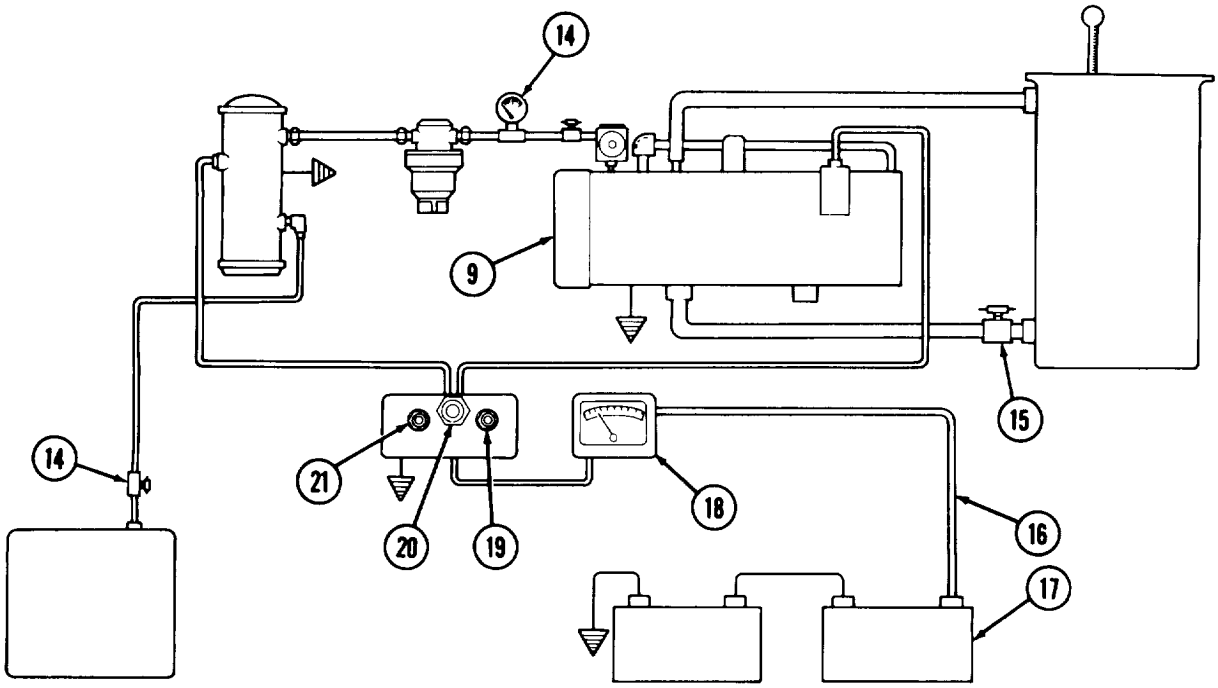

17-12. ENGINE COOLANT HEATER TESTING (Contd)

c. Flame Detector Switch Test

1. Place switch (3) in START position and hold.
2. When indicator lamp (4) illuminates, place switch (3) in RUN position.
3. If indicator lamp (4) does not light, adjustor replace flame detector switch (6) (para. 17-3).
4. Place switch (3) in OFF position.

d. Fuel Control Valve Test

1. Place switch (3) in START position and hold.
2. When indicator lamp (4) illuminates, place switch (3) in RUN position.
3. Check fuel consumption at flowmeter (1). Fuel consumption should be 0.013-0.017 lb/min (0.006-0.008 kg/min) at low heat, and 0.022-0.030 lb/min (0.010-0.014 kg/min) at high heat. Replace fuel control valve (7) if fuel consumption rate is not within limits (para. 17-7).
4. Check operating amperage on multimeter (2). If operating amperage exceeds 4 amperes, check heater wiring. Replace damaged parts (paras. 17-3 through 17-11, as necessary).
5. Move switch (5) from LO to HI position. Burning in heater (8) should intensify or decrease. Replace fuel control valve (7) if burning in heater (8) does not intensify or decrease (para. 17-7).
6. Place switch (5) in LO position.
7. Place switch (3) in OFF position.

e. Blower Motor Test

1. Place switch (3) in START position and hold.
2. When indicator lamp (4) illuminates, place switch (3) in RUN position. Allow heater to run for a few minutes.
   a. If blower motor (9) does not run, replace blower motor (9) (para. 17-4).
   b. If blower motor (9) runs, but heater does not ignite, check ignition components. Replace ignition components if defective (para. 17-3, 17-7, 17-8, 17-9, or 17-10).

NOTE

Purge time is the interval from turning control box switch to OFF position until the indicator lamp goes out.

3. Place switch (3) in OFF position and record purge time. Burning should stop within thirty seconds; blower motor (9) should continue to run up to three minutes. Replace or adjust flame detector switch (6) (para. 17-3) if purge time exceeds three minutes.

17-12. ENGINE COOLANT HEATER TESTING (Contd)

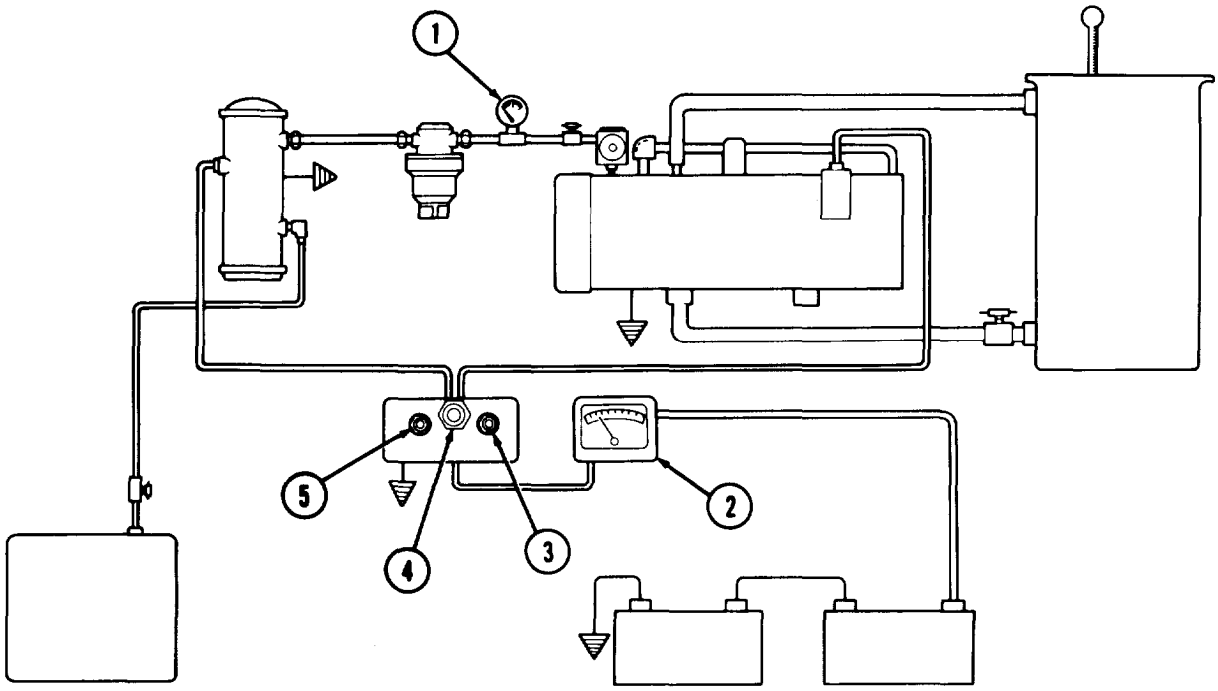

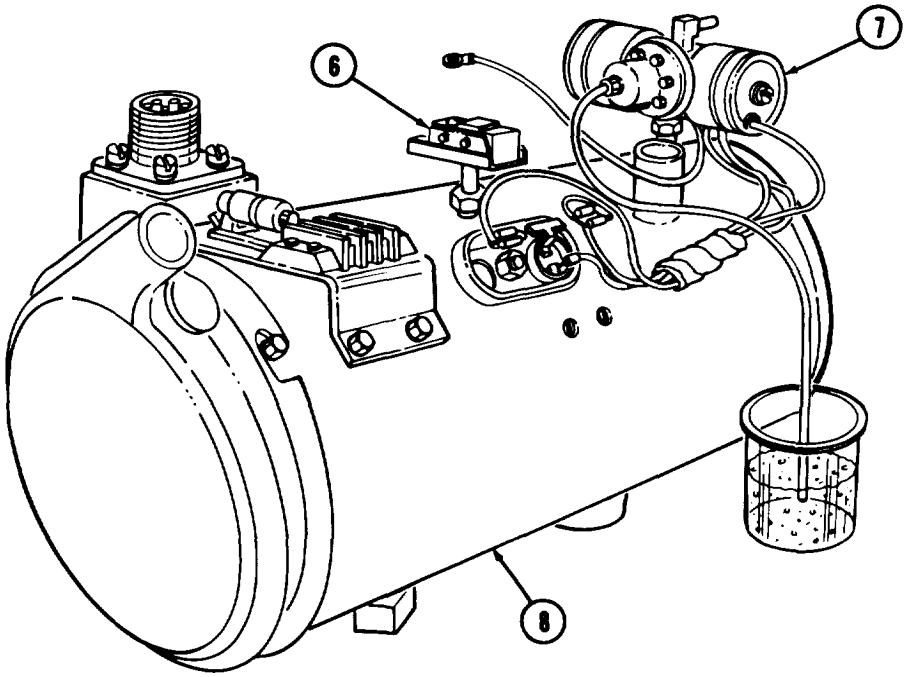

17-12. ENGINE COOLANT HEATER TESTING (Contd)

f. Restriction Thermostat Test

1. Place switch (4) in START position and hold.
2. When indicator lamp (5) illuminates, place switch (4) in RUN position. AIlow heater (8) to run.
3. Check temperature of coolant at thermometer (1). Temperature should be 140-170° F (60-77° C).
   a. Replace restriction thermostat if coolant temperature is not within limits (para. 17-5).
   b. If coolant temperature is still not within limits, replace fuel control valve (para. 17-7).
4. Place switch (4) in OFF position.

g. Overheat Switch Test

1. Place switch (4) in START position and hold.
2. When indicator lamp (5) illuminates, place switch (4) in RUN position. Allow heater (8) to run.
3. Partially restrict air inlet with a sheet of cardboard or sheet metal. Overheat switch (9) should activate and shut down heater (8) within five minutes. Replace overheat switch (9) if heater (8) does not shut down after five minutes (para. 17-8).
4. Check temperature of coolant at thermometer (1). Temperature should be 220-250° F (104-121° C).
5. Replace overheat switch (9) if coolant temperature is not within limits (para. 17-8).
6. Place switch (4) in OFF position.

h. Test Equipment Removal

WARNING

Allow time for heater to cool before removing from test equipment. Failure to do so may result in injury to personnel or damage to equipment.

1. Disconnect lead (2) from 24-volt power source (3).
2. Install guard (6) on heater (8) with four new screw-assembled lockwashers (7).
3. Remove heater (8) from test equipment.

17-12. ENGINE COOLANT HEATER TESTING (Contd)

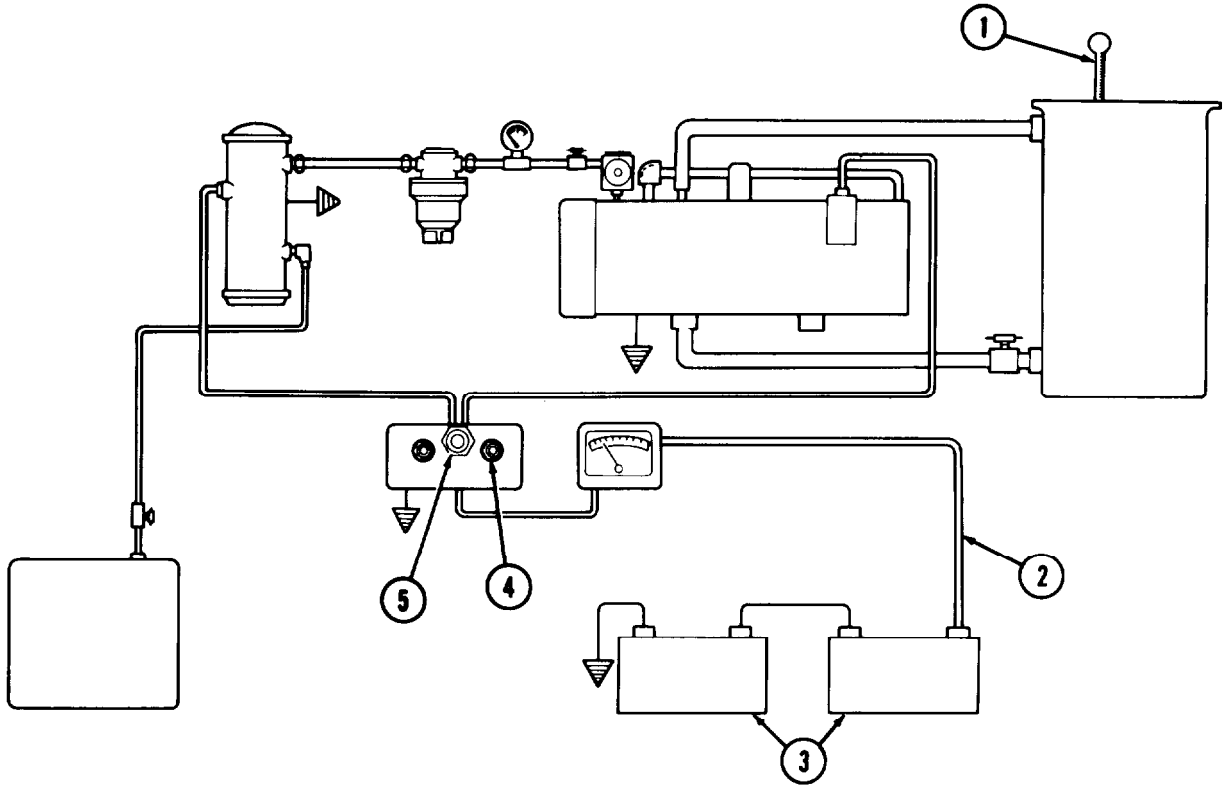

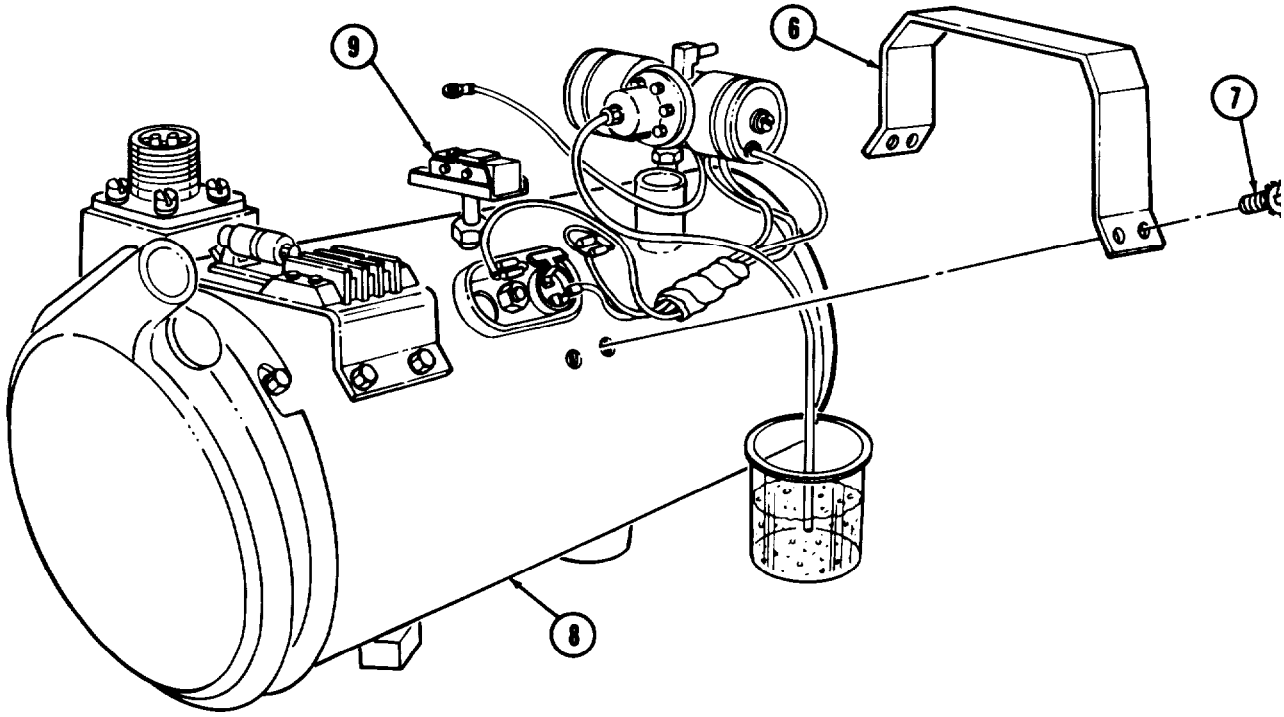

FOLLOW-ON TASK Install engine coolant heater (TM 9-2320-260-20).

Section III. PERSONNEL HEATER MAINTENANCE

17-13. GENERAL

Both Stewart-Wamer heater models are covered in this section. M809 series trucks are equipped with either personnel heater model 10530-A24 (early model) or personnel heater model 10530B (late model). The heaters are capable of burning a variety of multitfuels, enabling truck operation in temperatures of -25°F (-32°C) or less. For additional personnel heater data, refer to para. 17-1.

17-14. PERSONNEL HEATER MAINTENANCE INDEX

PARA NO.	TITLE	PAGE NO.
17-15.	Personnel Heater Flame Detector Switch Maintenance	17-37
17-16.	Personnel Heater Fuel Control Valve Maintenance	17-40
17-17.	Personnel Heater Control Bracket Replacement	17-44
17-18.	Personnel Heater Igniter and Ignition Control Unit Replacement	17-46
17-19.	Personnel Heater Fuel Line and Blower Housing Replacement	17-50
17-20.	Personnel Heater Blower Motor Replacement	17-52
17-21.	Personnel Heater Burner Maintenance	17-54
17-22.	Personnel Heater Overheat Switch Replacement	17-60
17-23.	Personnel Heater Receptacle Replacement	17-62
17-24.	Personnel Heater Heat Exchanger Maintenance	17-64
17-25.	Personnel Heater Testing	17-66
17-26.	Thermal Barrier Insulation Replacement	17-74

17-15. PERSONNEL HEATER FLAME DETECTOR SWITCH MAINTENANCE

THIS TASK COVERS:

a. Removal
b. Disassembly
c. Cleaning and Inspection
d. Assembly
e. Installation

INITIAL SETUP

APPLICABLE MODELS
All

TEST EQUIPMENT
Multimeter (Appendix B, Item 115)

TOOLS
General mechanic's tool kit (Appendix B, Item 1)
Tool kit, electrical (Appendix B, Item 106)

MATERIALS/PARTS
Five screw-assembled lockwashers (Appendix D, Item 402)
Sleeve (Appendix D, Item 507)

REFERENCES (TM)
TM 9-2320-260-20
TM 9-2320-260-34P-2

EQUIPMENT CONDITION
Personnel heater removed (TM 9-2320-260-20).

NOTE

- The flame detector switch is maintained the same for early and late model heaters.
- Tag all wires for installation.

a.Removal

1. Release two dzus fasteners (6) and remove guard (5) from heater housing (7).
2. Remove five screw-assembled lockwashers (l), two ignition control leads (4), receptacle leads (3), and blower motor lead (2) from flame detector switch (9). Discard screw-assembled lockwashers (1).
3. Loosen nut (8) and remove flame detector switch (9) from heater housing (7).

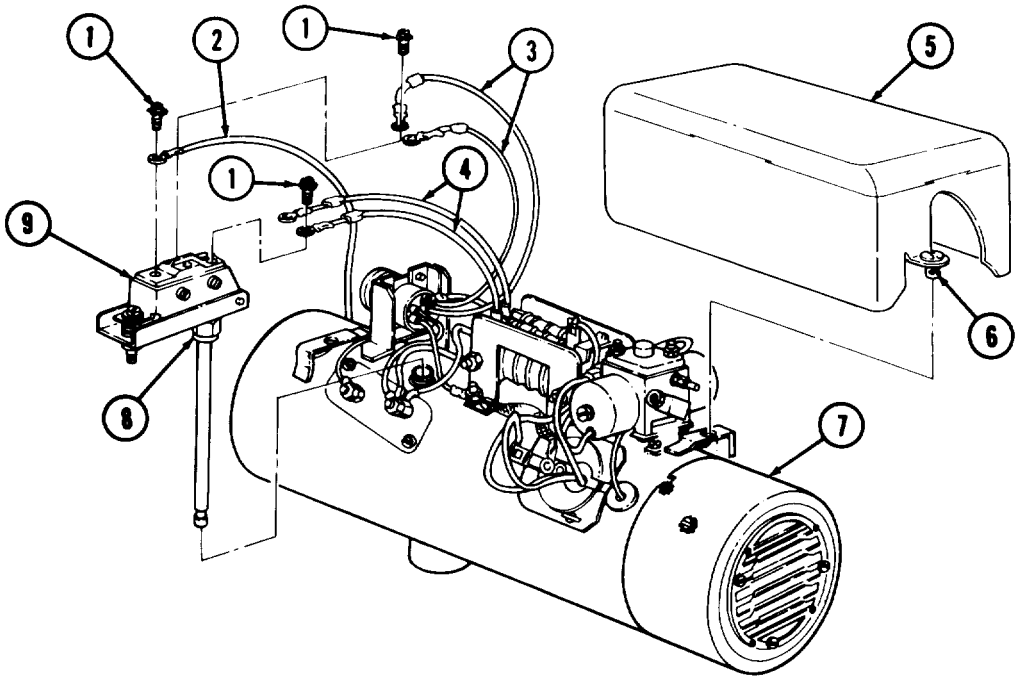

17-15. PERSONNEL HEATER FLAME DETECTOR SWITCH MAINTENANCE (Contd)

b. Diassembly

1. Remove adjusting screw (2), washer (3), and spring (9) from microswitch (4) and mount (8).

CAUTION

Ceramic rod is very brittle and is easily broken; handle carefully,

2. Tilt microswitch (4) back on mount (8).
3. Invert microswitch (4) and remove.ceramic rod (1) from probe (5).
4. Remove sleeve (7) and nut (6) from probe (5). Discard sleeve (7).

c. Cleaning and Inspection

1. Inspect probe (5) of flame detector switch (17) for bends and corrosion. Remove corrosion from probe (5). Replace flame detector switch (17) if probe (5) is bent.
2. Inspect ceramic rod (1) for chips, cracks, and breaks. Replace ceramic rod (1) if chipped, cracked, or broken.

d. Assembly

CAUTION

Ceramic rod is very brittle and is easily broken; handle carefully.

1. Tilt microswitch (4) back on mount (8) and insert ceramic rod (1) in probe (5).
2. Position spring (9) in place and tilt microswitch (4) back into position.
3. Install washer (3) and adjusting screw (2) on microswitch (4) and mount (8). Tighten microswitch (4) until it clicks, then continue an additional three-quarter turn.
4. Install new sleeve (7) and nut (6) on probe (5).

e. Installation

1. Install flame detector switch (17) on heater housing (16). Tighten nut (6).
2. Install two receptacle leads (12), ignition control leads (13), and blower motor lead (11) on flame detector switch (17) with five new screw-assembled lockwashers (10).
3. Position guard (14) on heater housing (16) and install with two dzus fasteners (15).

17-15. PERSONNEL HEATER FLAME DETECTOR SWITCH MAINTENANCE (Contd)

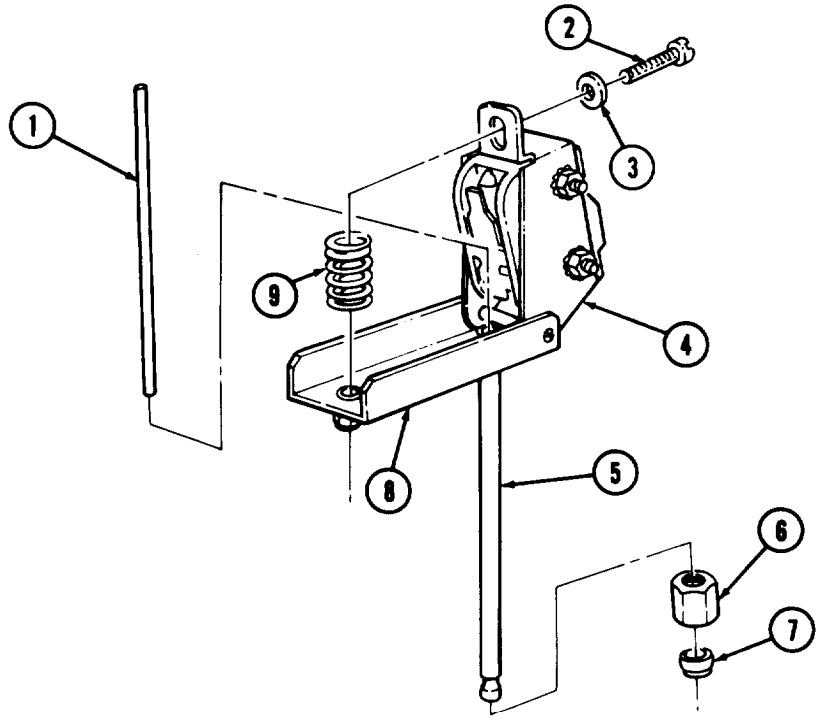

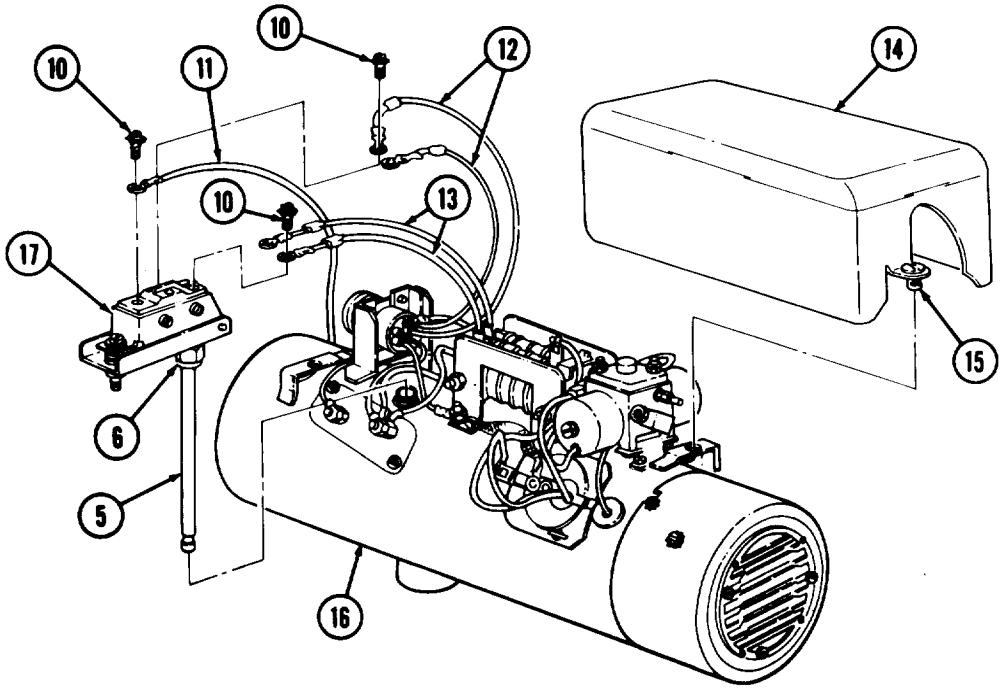

FOLLOW-ON TASK Install personnel heater (TM 9-2320-260-20).

17-16. PERSONNEL HEATER FUEL CONTROL VALVE MAINTENANCE

THIS TASK COVERS:

a. Removal
b. Inspection
c. Installation

INITIAL SETUP

Applicable MODELS
All

TEST EQUIPMENT
Multimetir (Appendix B, Item 115)

TOOLS
General mechanic's tool kit (Appendix B, Item 1)
Tool kit, electrical (Appendix B, Item 106)

MATERIALS/PARTS
Four screw-assembled lockwashers (Appendix D, Item 405)

MATERIALS/PARTS (Contd)
Screw-assembled lockwasher (Appendix D, Item 402)
Two nut-assembled lockwashers (Appendix D, Item 262)
Nut-assembled lockwasher (Appendix D, Item 263)
Antiseize tape (Appendix C, Item 50)

REFERENCES (TM)
TM 9-2320-260-20
TM 9-2320-260-34P-2

EQUIPMENT CONDITION
Personnel heater removed (TM 9-2320-260-20).

a. Removal

NOTE

- Perform this procedure for early model heaters.
- Tag all wires for installation.

1. Release two dzus fasteners (10) and remove guard (1) from heater housing (6).
2. Remove nut-assembled lockwasher (9), screw (7), and clamp (8) from ignition control unit (2). Discard nut-assembled lockwasher (9).
3. Remove screw-assembled lockwasher (3) and lead (4) from receptacle (5). Discard screw-assembled lockwasher (3).
4. Remove nut-assembled lockwasher (13) and three leads (11) from overheat switch (12). Discard nut-assembled lockwasher (13).
5. Remove nut-assembled lockwasher (14) and lead (15) from overheat switch (12). Discard nut-assembled lockwasher (14).
6. Disconnect fuel outlet line (20) from fuel control valve (16).
7. Remove four screw-assembled lockwashers (19) and fuel control valve (16) from heater housing (6). Discard screw-assembled lockwashers (19).
8. Remove elbow (18) and nipple (17) from fuel control valve (16).

b. Inspection

Inspect fuel control valve (16) for grooves, dents, and loose or damaged wiring. Replace fuel control valve (16) if grooved, dented, or wiring is loose or damaged.

17-16. PERSONNEL HEATER FUEL CONTROL VALVE MAINTENANCE (Contd)

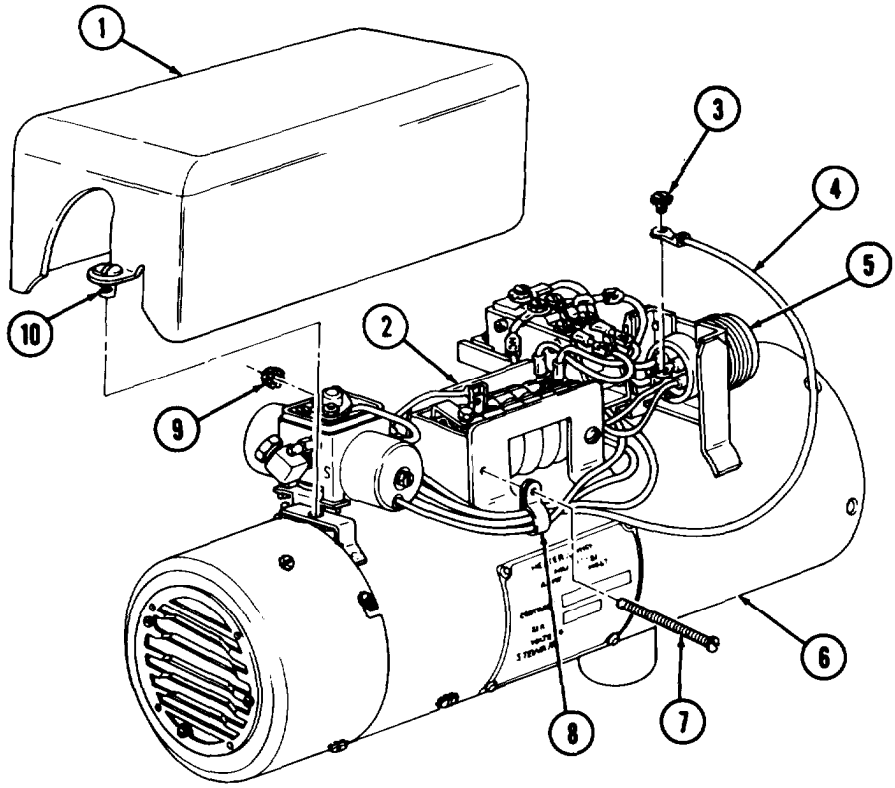

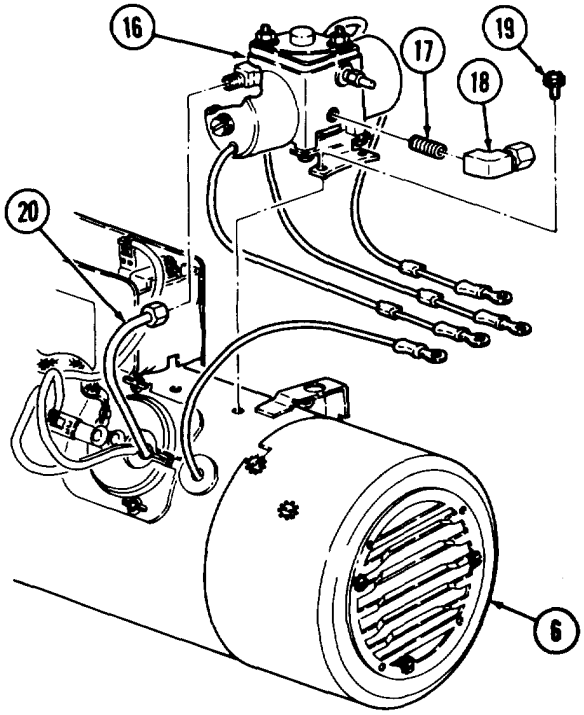

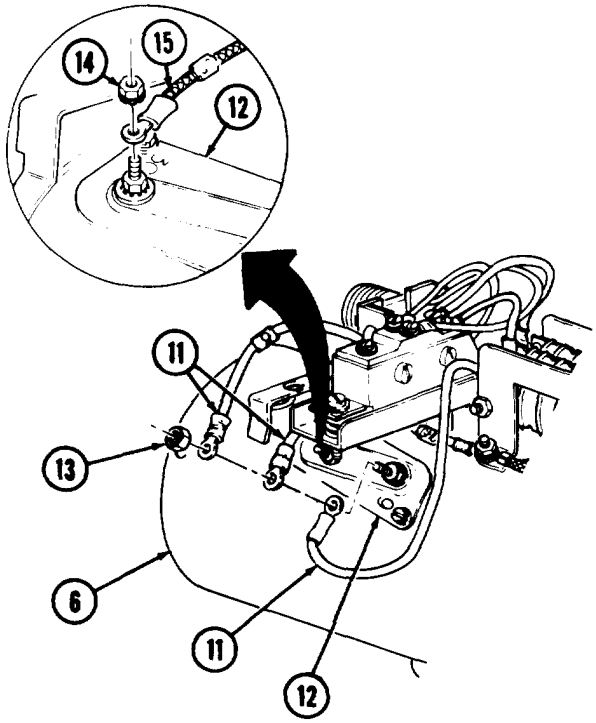

17-16. PERSONNEL HEATER FUEL CONTROL VALVE MAINTENANCE (Contd)

c Installation

1. Wrap threads of nipple (2) with antiseize tape.
2. Install nipple (2) and elbow (3) on fuel control valve (1).
3. Install fuel control valve (1) on heater housing (5) with four new screw-assembled lockwashers (4).
4. Connect fuel outlet line (6) on fuel control valve (1).
5. Route lead (11) to overheat switch (8) and install with new nut-assembled lockwasher (10).
6. Route three leads (7) to overheat switch (8) and install with new nut-assembled lockwasher (9).
7. Route lead (15) to receptacle (16) and install with new screw-assembled lockwasher (14).
8. Install clamp (18) on ignition control unit (13) with screw (17) and new nut-assembled lock-washer (19).
9. Position guard (12) on heater housing(5) and install with two dzus fasteners (20).

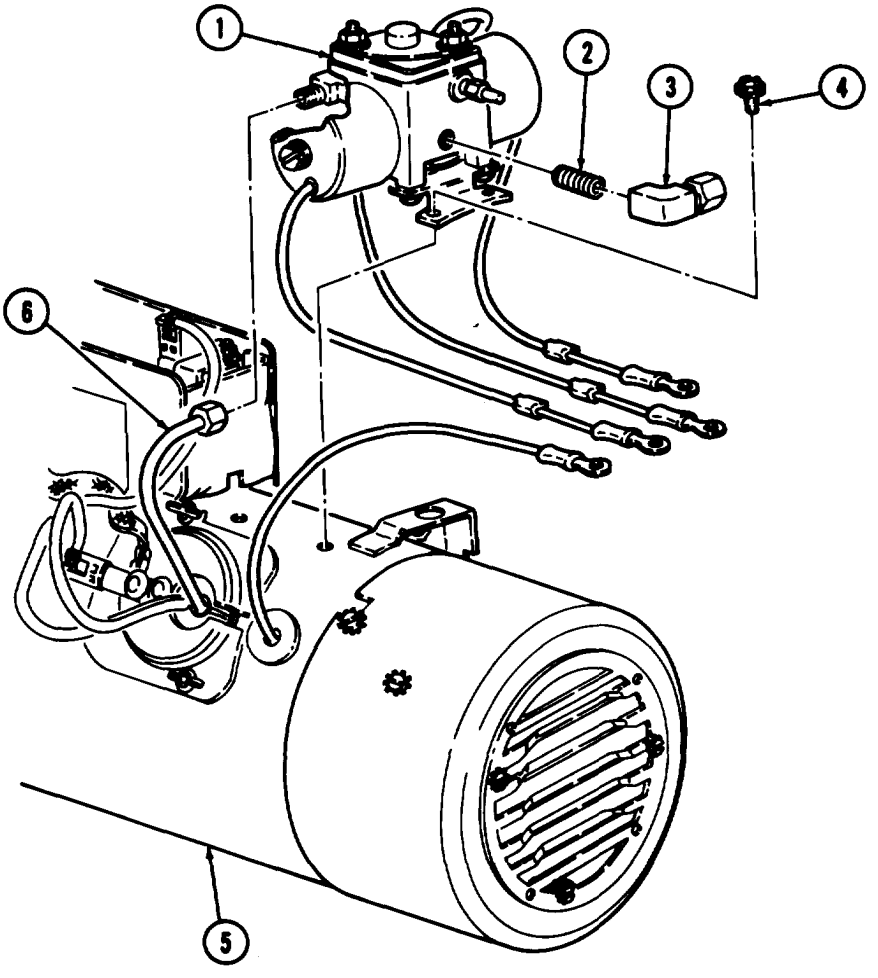

17-16. PERSONNEL HEATER FUEL CONTROL VALVE MAINTENANCE (Contd)

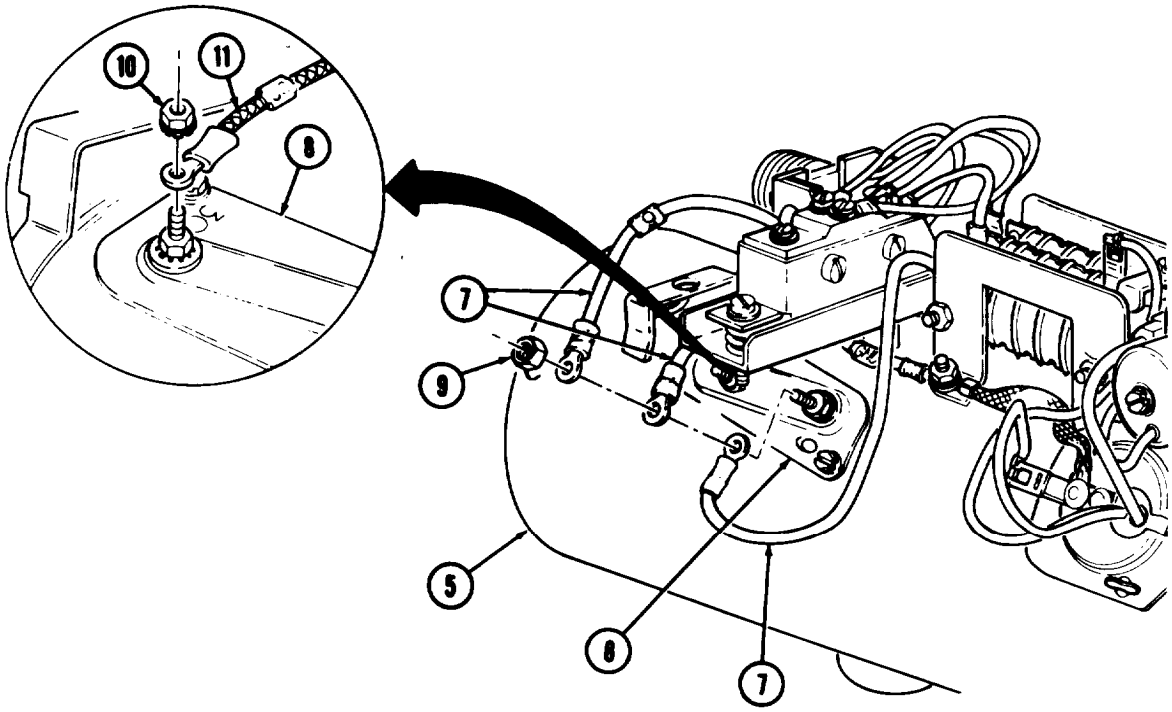

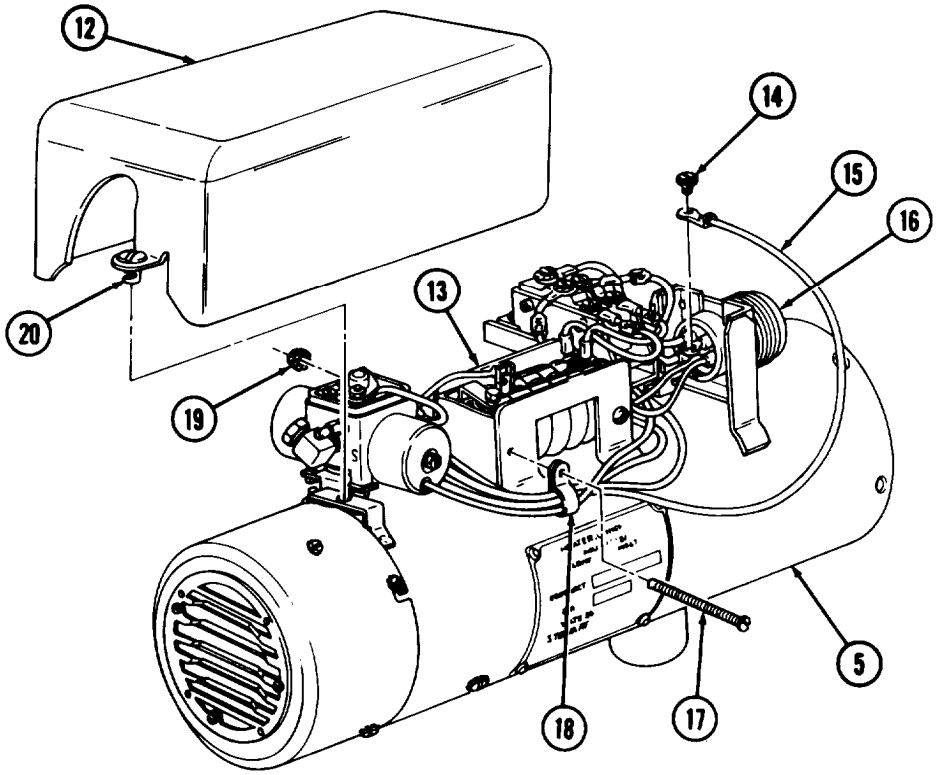

FOLLOW-ON TASK: Install personnel heater (TM 9-2320-260-20).

17-17. PERSONNEL HEATER CONTROL BRACKET REPLACEMENT

THIS TASK COVERS:

a. Removal b. Installation

INITIAL SETUP

APPLICABLE MODELS
All

TEST EQUIPMENT
Multimeter (Appendix B, Item 115)

TOOLS
General mechanic's tool kit (Appendix B, Item 1)
Tool kit, electrical (Appendix B, Item 106)

MATERIALS/PARTS
Five screw-assembled lockwashers (Appendix D, Item 405)
Two nut-assembled lockwashers (Appendix D, Item 262)
Four tiedown straps (Appendix C, Item 28)

REFERENCES (TM)
TM 9-2320-260-20
TM 9-2320-260-34P-2

EQUIPMENT CONDITION
Personnel heater removed (TM 9-2320-260-20).

NOTE
Perform this procedure for late model heaters.

a. Removal

1. Release two dzus fasteners (6) and remove guard (7) horn heater housing (14).

NOTE
Tag all wires for installation.

2. Remove two nut-assembled lockwashers (16) and leads (17) from overheat switch (15). Discard nut-assembled lockwashers (16).
3. Remove four tiedown straps (5) from heater wiring. Discard tiedown straps (5).
4. Remove five screw-assembled lockwashers (1) and leads (19) from flame detector switch (18). Discard screw-assembled lockwashers (1).
5. Disconnect two igniter leads (2) from ground terminal (11) and circuit board (4).
6. Loosen nut (12) and disconnect fuel outlet line (13) from fuel control valve elbow (10).
7. Remove two screws (3) and ground terminal (11) from control bracket (8) and heater housing (14).
8. Remove six screws (9) and control bracket (8) from heater housing (14).

b.Installation

1. Install control bracket (8) on heater housing (14) with six screws (9).
2. Install ground terminal (11) on heater housing (14) and control bracket (8) with two screws (3).

17-17. PERSONNEL HEATER CONTROL BRACKET REPLACEMENT (Contd)

3. Connect fuel outlet line (13) on fuel control valve elbow (10). Tighten nut (12).
4. Connect two igniter leads (2) on circuit board (4) and ground terminal (11).
5. Install five leads (19) on flame detector switch (18) with five new screw-assembled lockwashers (1).
6. Install two leads (17) on overheat switch (15) with two new nut-assembled lockwashers (16).
7. Install four new tiedown straps (5) on heater wiring.
8. Position guard (7) on heater housing (14) and install with two dzus fasteners (6).

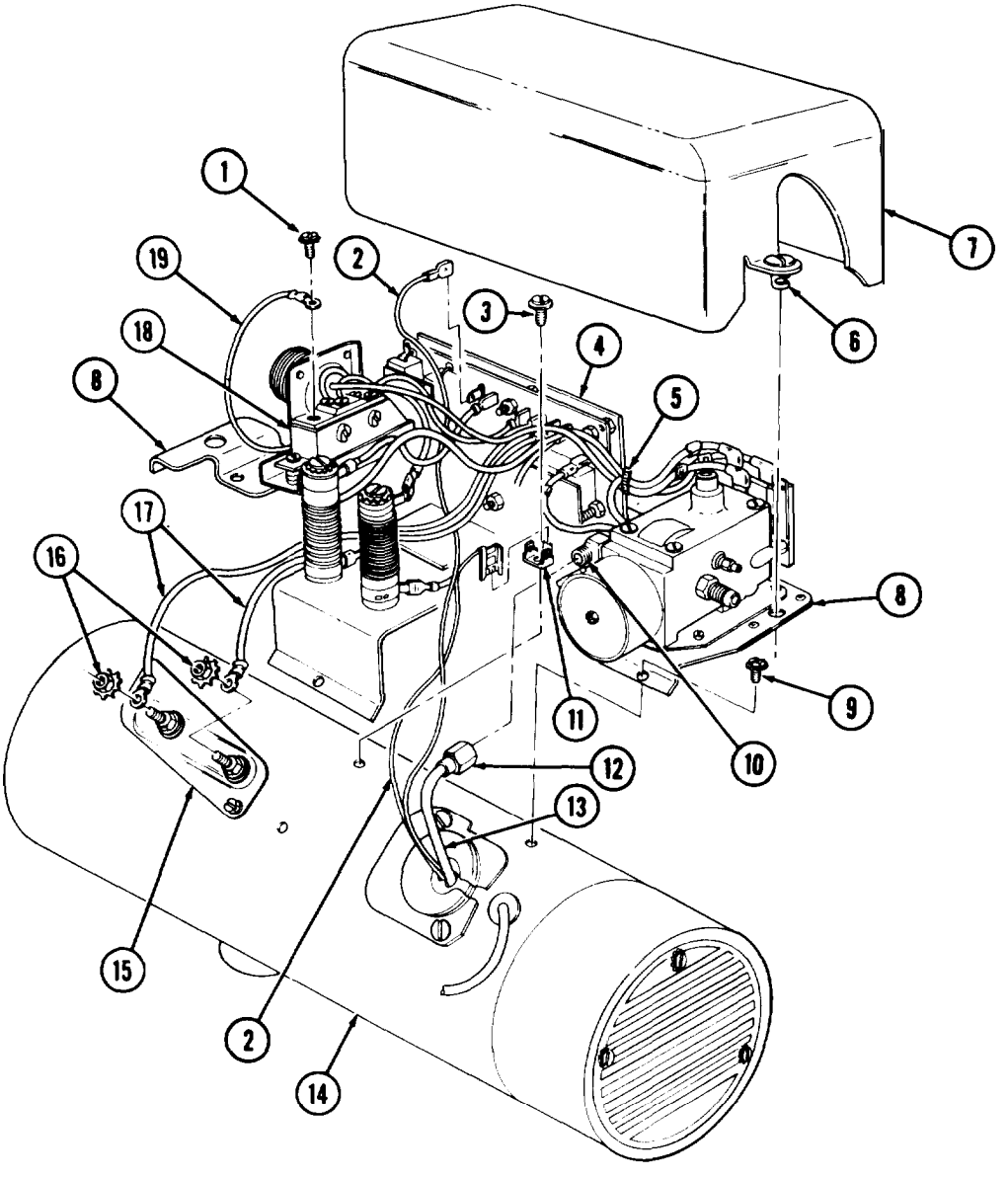

FOLLOW-ON TASK: Install personnel heater (TM 9-2320-260-20).

17-18. PERSONNEL HEATER IGNITER AND IGNITION CONTROL UNIT REPLACEMENT

THIS TASK COVER:

a. Igniter Removal
b. Ignition Control Unit Removal
c. Ignition Control Unit Installation
d. Igniter Installation

INITIAL SETUP

APPLICABLE MODELS
All

TEST EQUIPMENT
Multimeter (Appendix B, Item 115)

TOOLS
General mechanic's tool kit (Appendix B, Item 1)
Tool kit, electrical (Appendix B, Item 106)

MATERIALS/PARTS
Nut-assembled lockwasher (Appendix D, Item 263)
Igniter (Appendix D, Item 159)

MATERIALS/PARTS (Contd)
Screw-assembled lockwasher (Appendix D, Item 405)
Nut-assembled lockwasher (Appendix D, Item 262)
Five screw-assembled lockwashers (Appendix D, Item 402)
Lockwasher (Appendix D, Item 214)

REFERENCES (TM)
TM 9-2320-260-34P-2

EQUIPMENT CONDITION
Personnel heater blower motor removed (para. 17-20).

a Igniter Removal

NOTE

- Removal of the igniter is basically the same for early and late model heaters. This procedure covers the early model heater.
- Tag all wires for installation.

1. Remove nut-assembled lockwasher (1), receptacle ground lead (8), ground strap (6), and lockwasher (7) from ignition control unit (3). Discard nut-assembled lockwasher (1).
2. Disconnect igniter leads (2) and (5) from ignition control unit(3) and igniter hatch cover (4).
3. Release two fly screws (9) and remove igniter hatch cover (4) from heater housing (10).

CAUTION

Igniter is fragile. Use care when removing igniter. Failure to do so may result in damage to equipment

4. Press and turn igniter (13) one-fourth turn left and remove from igniter tube (12). Discard igniter (13).
5. Remove screw-assembled lockwasher (11) and igniter tube (12) from heater housing (10). Discard screw-assembled lockwasher (11).

b. Ignition Control Unit Removal

NOTE

Perform steps 1 through 4 for early model heaters.

1. Remove igniter (13) (task a.).
2. Remove nut-assembled lockwasher (18), thermostat lead (15), receptacle lead (14), and ignition control lead (17) from overheat switch (16). Discard nut-assembled lockwasher (18).
3. Remove two screw-assembled lockwashers (19) and ignition control leads (20) from flame detector switch (23). Discard screw-assembled lockwashers (19).
4. Remove three screw-assembled lockwashers (21), ignition control unit (3), and lockwasher (22) from heater housing (10). Discard lockwasher (22) and screw-assembled lockwashers (21).

17-18. PERSONNEL HEATER IGNITER AND IGNITION CONTROL UNIT REPLACEMENT (Contd)

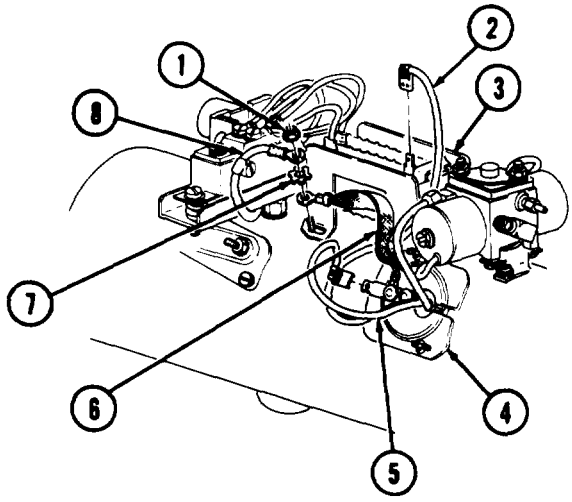

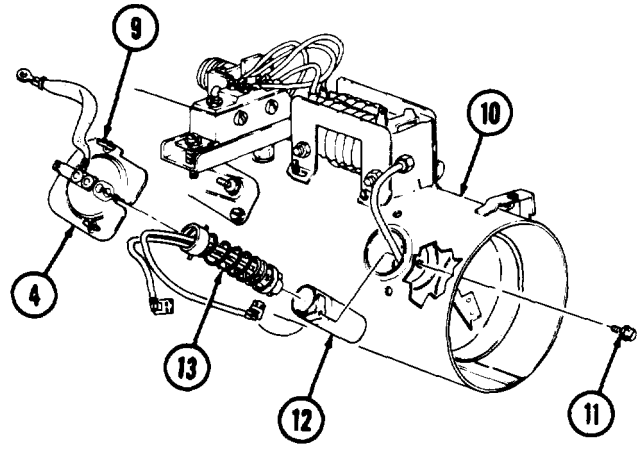

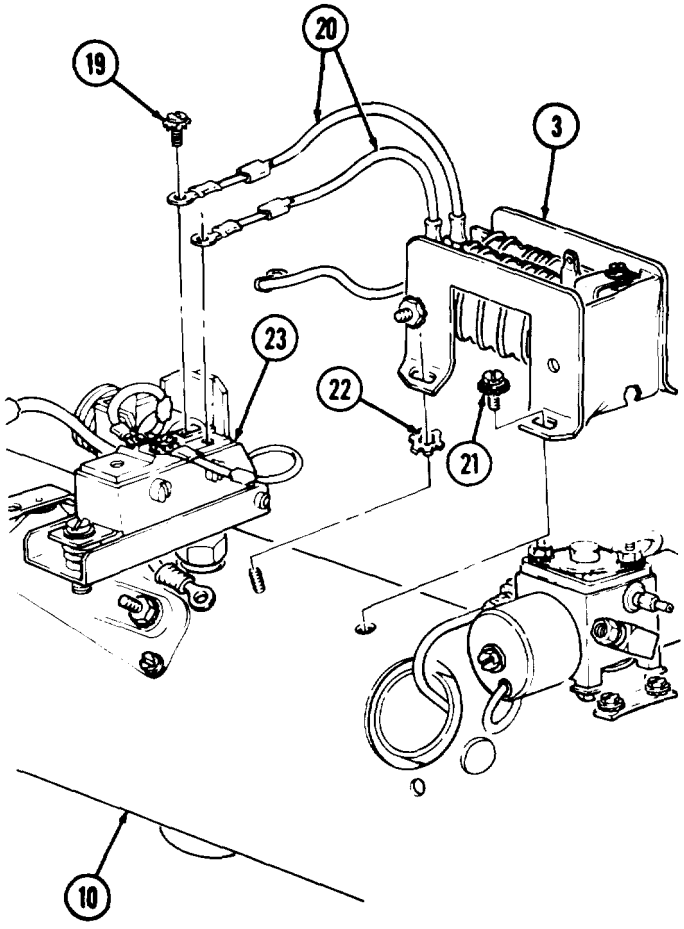

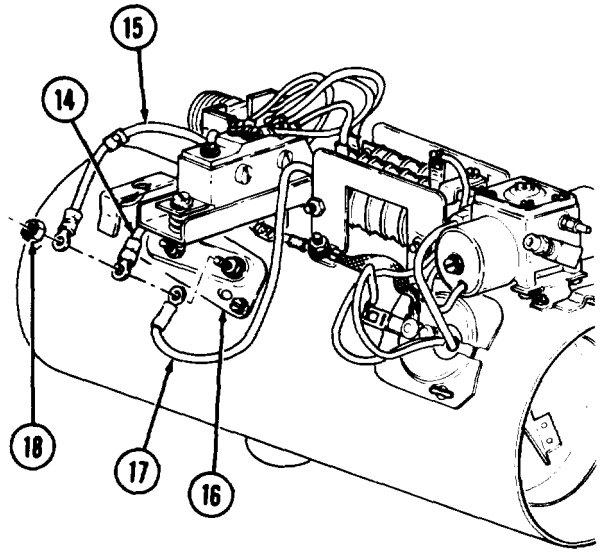

17-18. PERSONNEL HEATER IGNITER AND IGNITION CONTROL UNIT REPLACEMENT (Contd)

c. Ignition Control Unit Installation

NOTE

Perform steps 1 through 3 for early model heaters.

1. Install new lockwasher (6) and ignition control unit (3) on heater housing (4) with three new screw-assembled lockwashers (5).
2. Install two ignition control leads (2) on flame detector switch (7) with two new screw-assembled lockwashers (1).
3. Install ignition control lead (11), receptacle lead (8), and thermostat lead (9) on overheat stitch (10) with new nut-assembled lockwasher (12).

d. Igniter Installation

CAUTION

Installation of the igniter is basically the same for early and late model heaters. This procedure is for early model heaters.

1. Install igniter tube (15) in heater housing (4) with new screw-assembled lockwasher (14).

CAUTION

Igniter is fragile. Use care when removing igniter. Failure to do so may result in damage to equipment.

2. Install new igniter (16) in igniter tube (15) and press and turn one-fourth turn to right to hold in place.
3. Install igniter hatch cover (17) on heater housing (4) and hold in place with two fly screws (13).
4. Conned-igniter leads (19) and (20) on ignition control unit (3) and igniter hatch cover (17).
5. Install new lockwasher (22), ground strap (21), and receptacle ground lead (23) on ignition control unit (3) with new nut-assembled lockwasher (18).

17-18. PERSONNEL HEATER IGNITER AND IGNITION CONTROL UNIT REPLACEMENT (Contd)

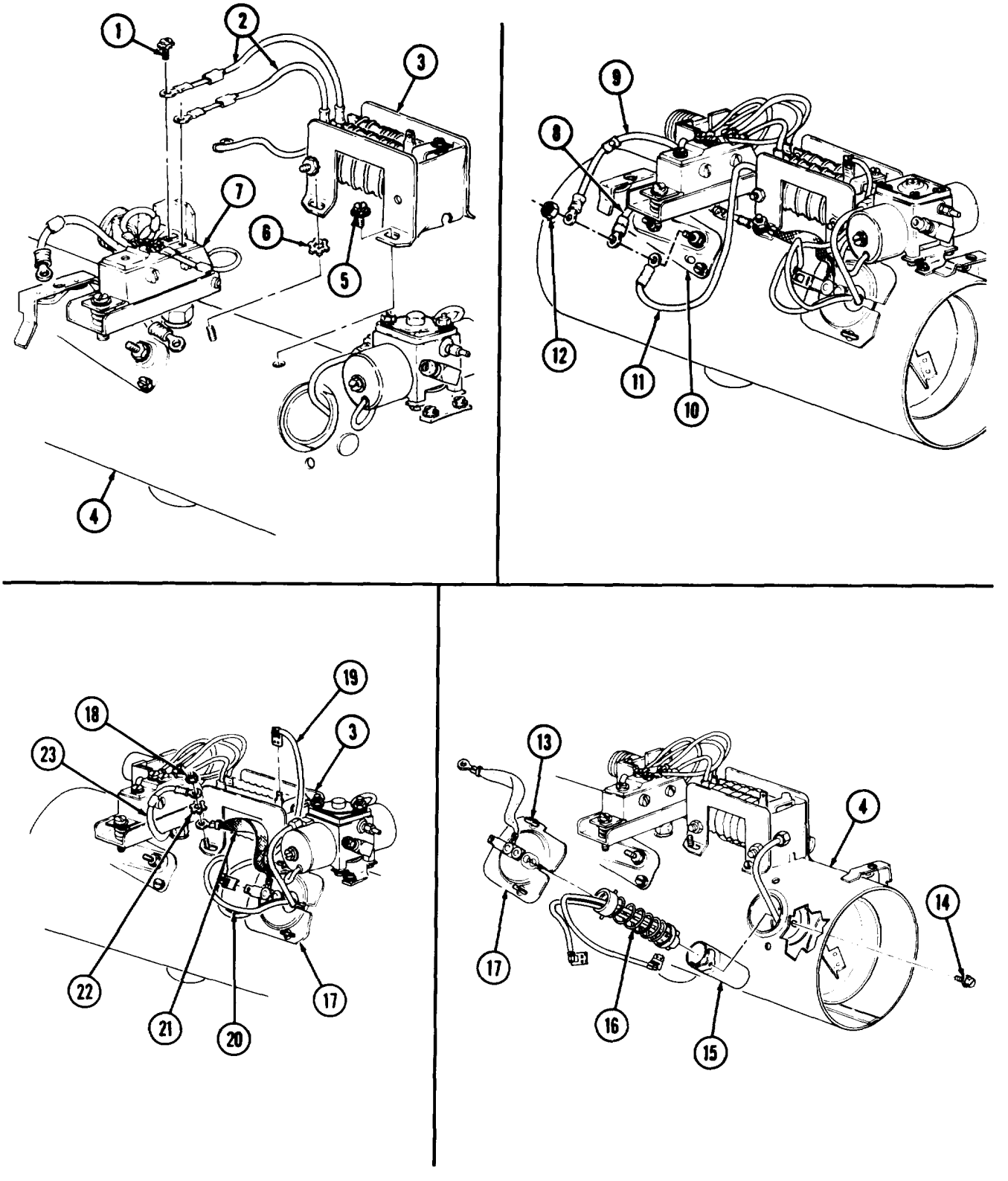

FOLLOW-ON TASK: Install personnel heater blower motor (para. 17-20).

17-19. PERSONNEL HEATER FUEL LINE AND BLOWER HOUSING REPLACEMENT

THIS TASK COVERS:

a. Removal **b. Installation**

INITIAL SETUP

APPLICABLE MODELS
All

REFERENCES (TM)
TM 9-2320-260-34P-2

TEST EQUIPMENT
Multimeter (Appendix B, Item 115)

EQUIPMENT CONDITION
Personnel heater igniter removed (para. 17-18).

TOOLS
General mechanic's tool kit (Appendix B, Item 1)
Tool kit, electrical (Appendix B, Item 106)

NOTE

Fuel line and blower housing are replaced the same for early and late model heaters. This procedure is for early model heaters.

a. Removal

1. Loosen nut (3) and remove fuel line (4) from fuel control valve (1).
2. Loosen nut (5) and remove fuel line (4) from burner fuel inlet (6).
3. Remove blower housing (2) from heat exchanger (7) and heater housing (8).

b. Installation

1. Place blower housing (2) in heater housing (8).
2. Install fuel line (4) on burner fuel inlet (6) through blower housing (2). Do not fully tighten nut (5).
3. Install fuel line (4) on fuel control valve (l). Finger tighten nut (3).

17-19. PERSONNEL HEATER FUEL LINE AND BLOWER HOUSING REPLACEMENT (Contd)

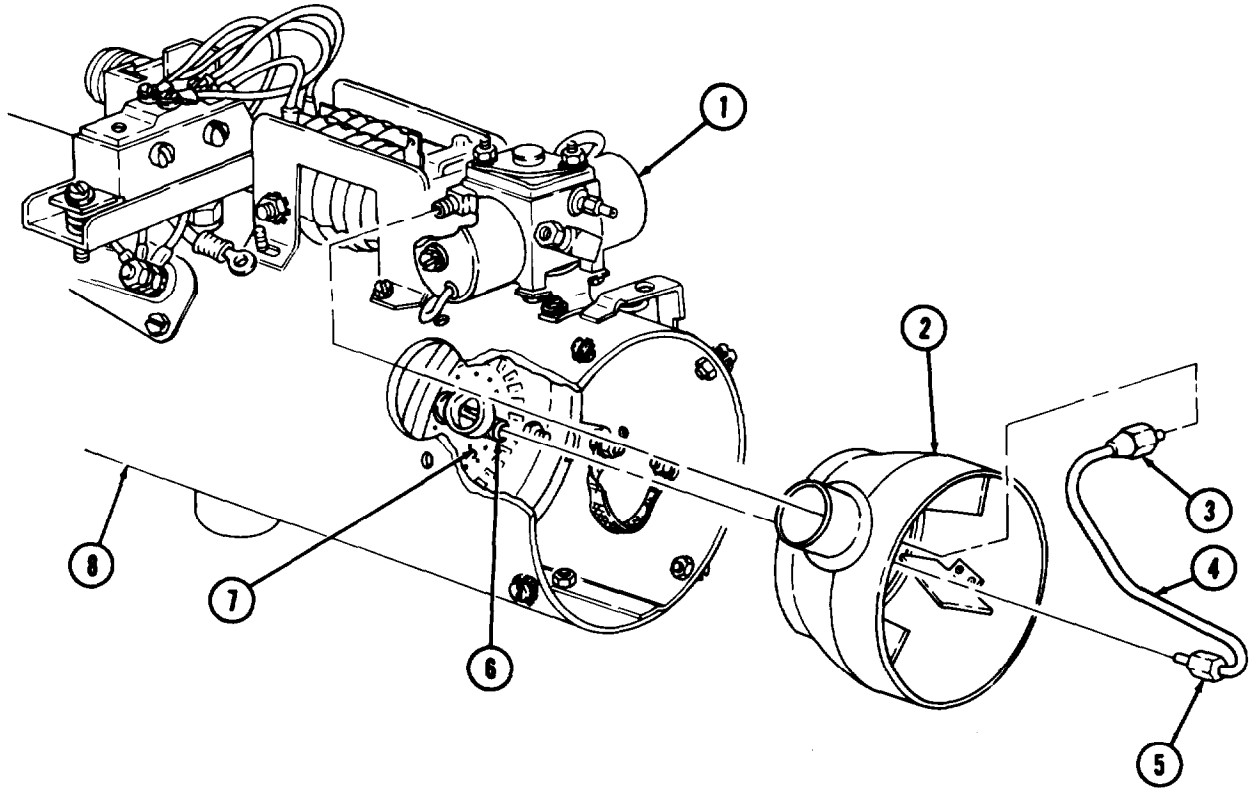

FOLLOW-ON TASK: Install personnel heater igniter (para. 17-18).

17-20. PERSONNEL HEATER BLOWER MOTOR REPLACEMENT

THIS TASK COVERS:

a. Blower Motor Removal **b. Blower Motor Installation**

INITIAL SETUP

APPLICABLE MODELS
All

TEST EQUIPMENT
Multimeter (Appendix B, Item 115)

TOOLS
General mechanic's tool kit (Appendix B, Item 1)
Tool kit, electrical (Appendix B, Item 106)

MATERIALS/PARTS
Screw-assembled lockwasher (Appendix D, Item 402)
Nut-assembled lockwasher (Appendix D, Item 262)

REFERENCES (TM)
TM 9-2320-260-20
TM 9-2320-260-34P-2

EQUIPMENT CONDITION
Personnel heater removed (TM 9-2320-260-20).

a. Blower Motor Removal

NOTE

- Personnel heater guard and blower motor are replaced basically the same for early and late model heaters. This procedure is for the early model heaters.
- Tag all wires for installation.

1. Release two dzus fasteners (10) and remove guard (1) from heater housing (7).
2. Remove screw-assembled lockwashers (2) and blower motor lead (3) from flame detector switch (4). Discard screw-assembled lockwashers (2).
3. Remove nut-assembled lockwasher (9) and screw (5) from clamp (6) and ignition control unit (8). Discard nut-assembled lockwasher (9).
4. Remove grommet (11) from heater housing (7).
5. Loosen four screw-assembled lockwashers (12) and remove blower motor (13) from heater housing (7).

b. Blower Motor Installation

1. Route blower motor lead (3) through heater housing (7) and install blower motor (13) on heater housing (7). Tighten four screw-assembled lockwashers (12).
2. Place grommet (11) around blower motor lead (3) and install on heater housing (7).
3. Install blower motor lead (3) on flame detector switch (4) with new screw-assembled lockwashers (2).
4. Install clamp (6) on ignition control unit (8) with screw (5) and new nut-assembled lockwasher (9).
5. Position guard (1) on heater housing (7) and hold in place with two dzus fasteners (10).

17-20. PERSONNEL HEATER BLOWER MOTOR REPLACEMENT (Contd)

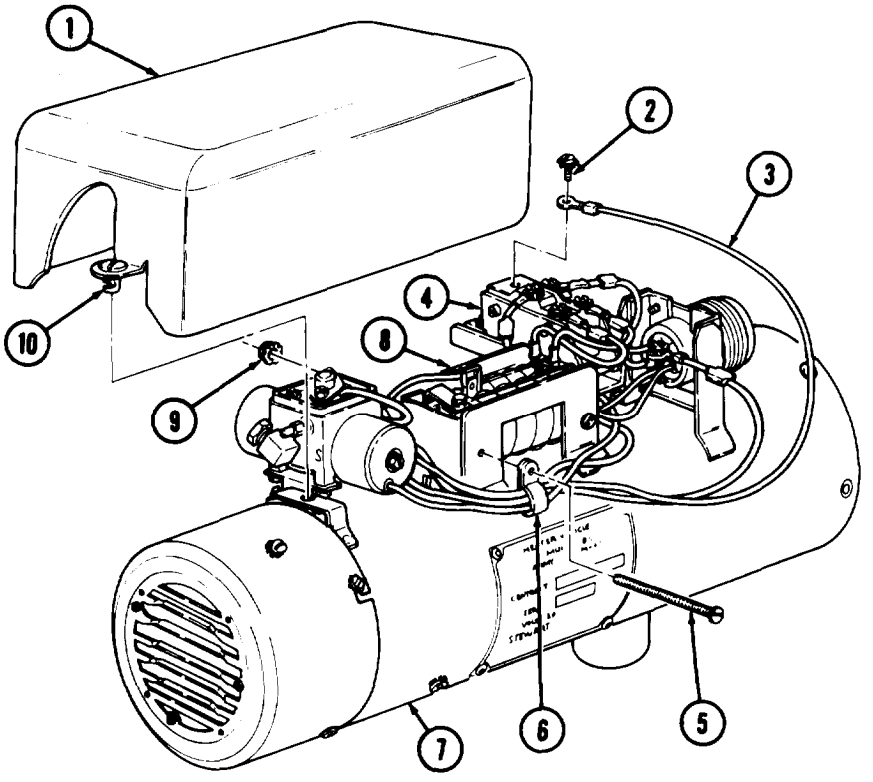

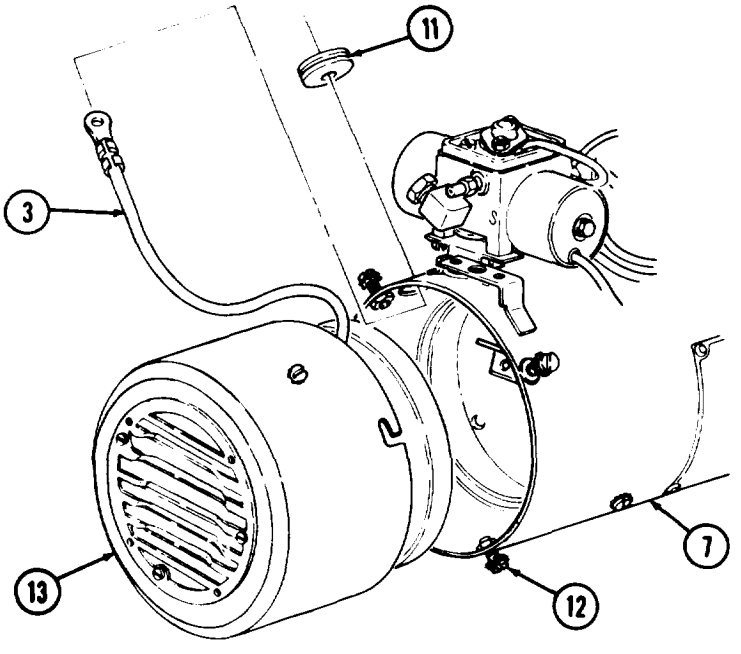

FOLLOW-ON TASK: Test fuel burning personnel heater (para. 17-25).

17-21. PERSONNEL HEATER BURNER MAINTENANCE

THIS TASK COVERS:

a. Removal
b. Disassembly
c. Cleaning and Inspection
d. Assembly
e. Installation

INITIAL SETUP

APPLICABLE MODELS
All

TOOLS
General mechanic's tool kit (Appendix B, Item 1)

MATERIALS/PARTS
Nut-assembled lockwashers (Appendix D, Item 264)
Nut-assembled lockwasher (Appendix D, Item 265)
Three lockwashers (Appendix D, Item 209)
Lockwasher (Appendix D, Item 212)
TWO fiber washers (late model heaters) (Appendix D, Item 536)
Fiber washer (early model heaters) (Appendix D, Item 537)
Fiber washer (Appendix D, Item 539)
O-ring (Appendix D, Item 283)
Gasket (Appendix D, Item 82)
Wick (Appendix D, Item 542)

MATERIALS/PARTS (Contd)
Drycleaning solvent (Appendix C, Item 48)
Rag (Appendix C, Item 32)
Wire (Appendix C, Item 59)

REFERENCES (TM)
TM 9-2320-260-34P-2

EQUIPMENT CONDITION
Personnel heater fuel line and blower housing removed (para. 17-19).

GENERAL SAFETY INSTRUCTIONS
- Keep fire extinguisher nearby when using drycleaning solvent.
- Eye protection is required when using wire brush for cleaning.
- Compressed air source will not exceed 30 psi (207 kPa).
- Eyeshields must be worn when cleaning with compressed air.

a. Removal

NOTE

The burner is removed the same for early and late model heaters. This procedure is for early model heaters.

1. Remove nut-assembled lockwasher (7), ground strap (5), lockwasher (6), and screw (8) from heater housing (10). Discard nut-assembled lockwasher (7) and lockwasher (6).
2. Remove nut-assembled lockwasher (4) and ground strap (5) from hook bolt and clamp (2). Discard nut-assembled lockwasher (4).
3. Loosen four nut-assembled lockwashers (3) and remove four hook bolt and clamps (2) from burner (9) and heat exchanger (1).
4. Remove burner (9) from heat exchanger (1) and heater housing (10).
5. Remove O-ring (12) and gasket (11) from burner (9). Discard O-ring (12) and gasket (11).

17-21. PERSONNEL HEATER BURNER MAINTENANCE (Contd)

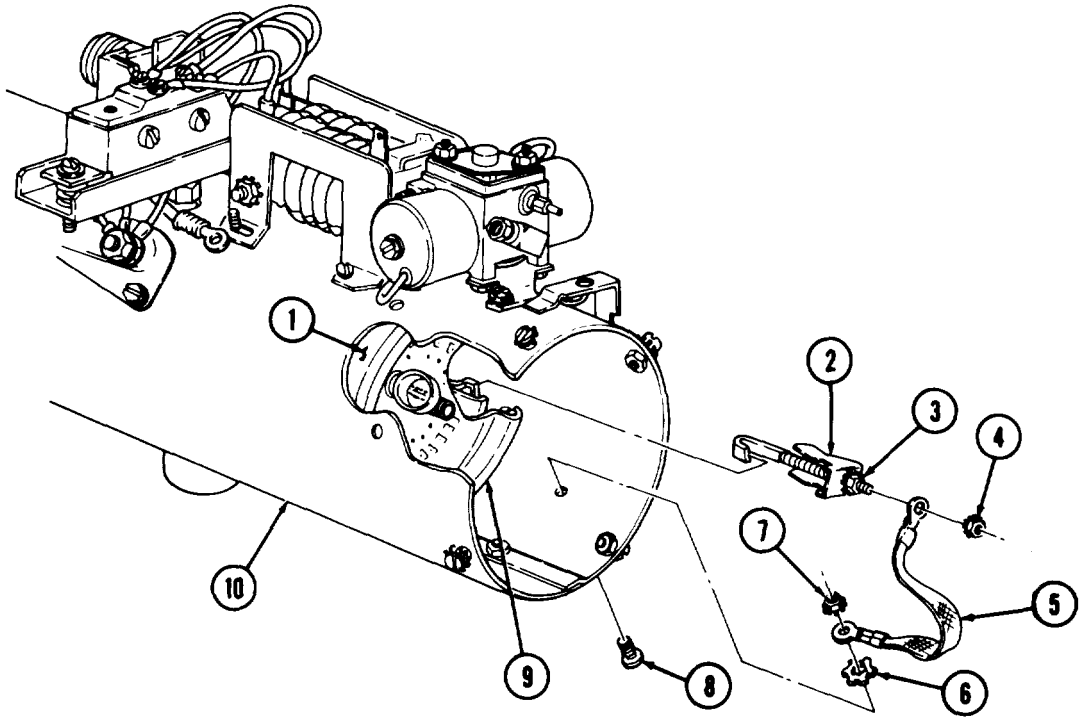

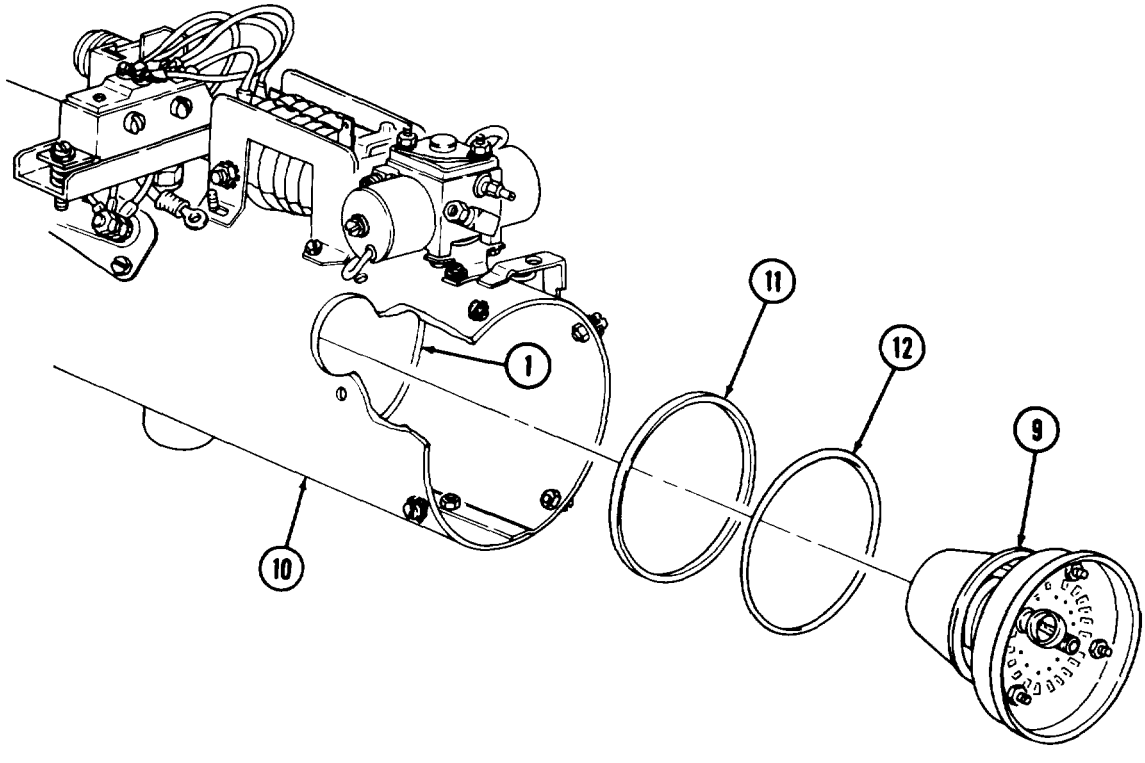

17-21. PERSONNEL HEATER BURNER MAINTENANCE (Contd)

b. Disassembly

NOTE

Perform steps 1 and 2 for early model heaters.

1. Remove three nuts (3), lockwashers (2), and burner plate (4) from burner cup (1). Discard lockwashers (2).
2. Remove screw (11), fuel vaporizer shield (10), washer (9), fiber washer (8), fuel vaporizer (7), fiber washer (6), and wick (5) from burner plate (4). Discard fiber washers (6) and (8) and wick (5).

NOTE

Perform steps 3 and 4 for late model heaters.

3. Remove three nuts (13), screws (12), and burner plate (4) from burner cup (1).
4. Remove screw (11), fuel vaporizer shield (10), washer (9), fiber washer (8), fuel vaporizer (7), retaining washer (15), two-fiber washers (14), and wick (5) from burner plate (4). Discard fiber washers (8) and (14) and wick (5).

c. Cleaning and Inspection

WARNING

- Drycleaning solvent is flammable and will not be used near open flame. Use only in well-ventilated places. Failure to do so may result in injury to personnel.
- Compressed air source will not exceed 30 psi (207 kPa). When cleaning with compressed air, eyeshields must be worn. Failure to wear eyeshields may result in injury to personnel.
- Eye protection is required when using wire brush for cleaning. Failure to do so may result in injury to personnel.

1. Using wire brush, remove carbon residue from burner plate (4) and burner cup (1). Wipe clean with drycleaning solvent and rag. Dry with compressed air.
2. Inspect burner plate (4) and burner cups (1) for bends, cracks and scores. Replace burner plate (4) or burner cup (1) if bent, cracked, or scored.

17-21. PERSONNEL HEATER BURNER MAINTENANCE (Contd)

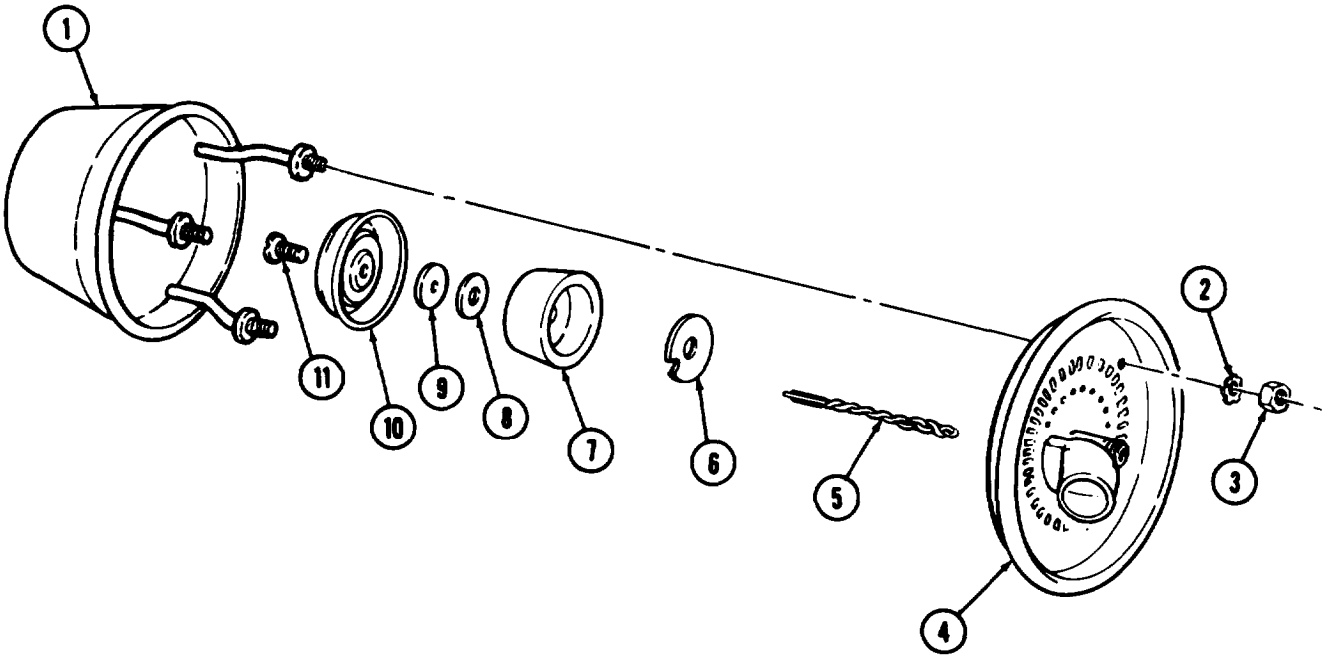

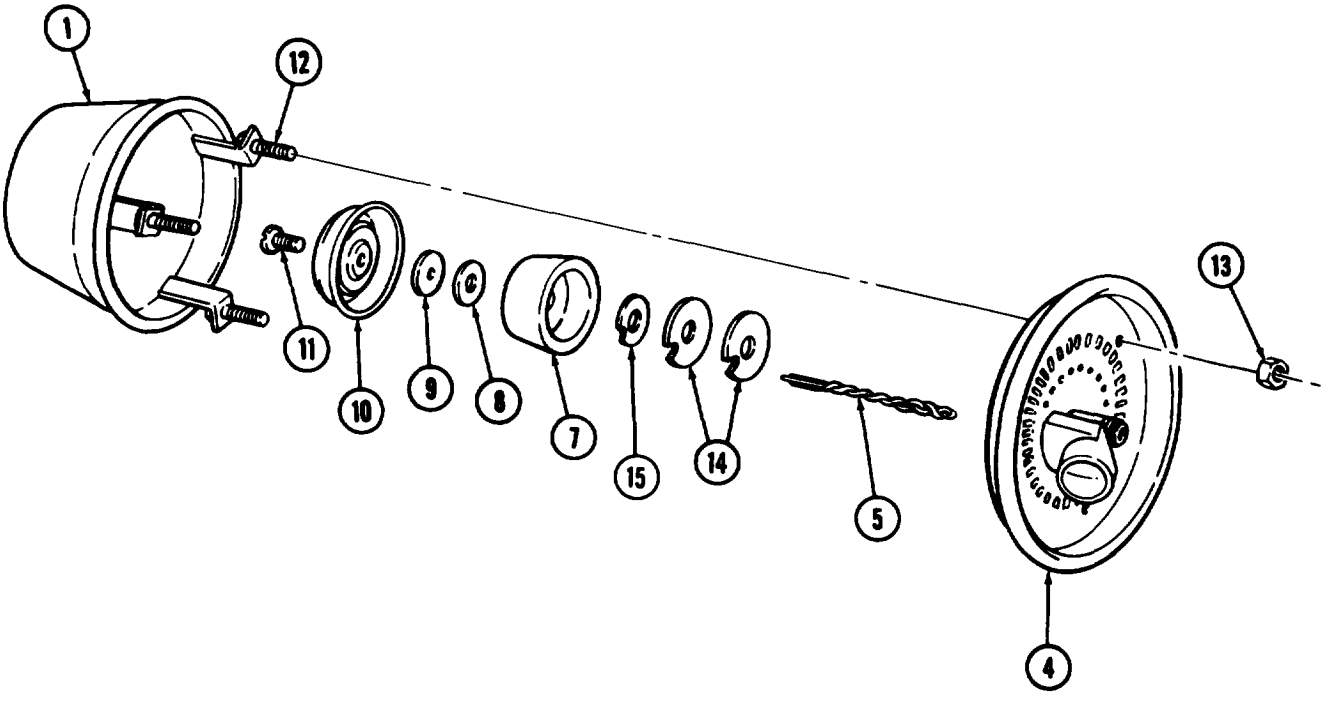

17-21. PERSONNEL HEATER BURNER MAINTENANCE (Contd)

d. Assembly

NOTE

Perform steps 1 through 3 for late model heaters.

1. Install two new fiber washers (8) on feed bushing (5) of burner plate (3). Ensure slots of fiber washers (8) aline with igniter pocket (6).
2. Install retaining washer (9) on feed bushing (5) with flange facing outward.

NOTE

- A new vaporizer is supplied with the wick inserted in hole of fuel vaporizer. Excess length is required for assembly of heater.
- Perform steps 4 and 5 for early model heaters.

3. Insert new wick (7) through slots of retaining washer (9), fiber washers (8), and into igniter pocket (6).
4. Install new fiber washer (17) on feed bushing (5) of burner plate (3). Ensure slot of fiber washer (17) alines with igniter pocket (6).
5. Install new wick (7) through slot of fiber washer (17) and into igniter pocket (6).
6. Using thin wire, loop wick (7) over T-bar support (18) of igniter pocket (6).
7. Pressing fuel vaporizer (10) against fiber washer (17) or retaining washer (9), pull wick (7) back through hole of fuel vaporizer (10) until tight. Clip off excess wick (7).
8. Position screw (14), washer (12), and new fiber washer (11) on fuel vaporizer shield (13) and install on fuel vaporizer (10).
9. Install burner plate (3) on burner cup (1) with three new Iockwashers (15) and nuts (16).

NOTE

Perform step 10 for late model heaters.

10. Install burner plate (3) on burner cup (1) with three screws (2) and nuts (4).

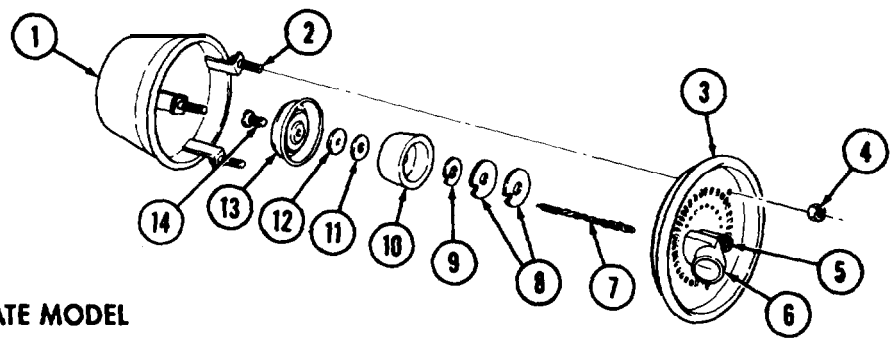

LATE MODEL

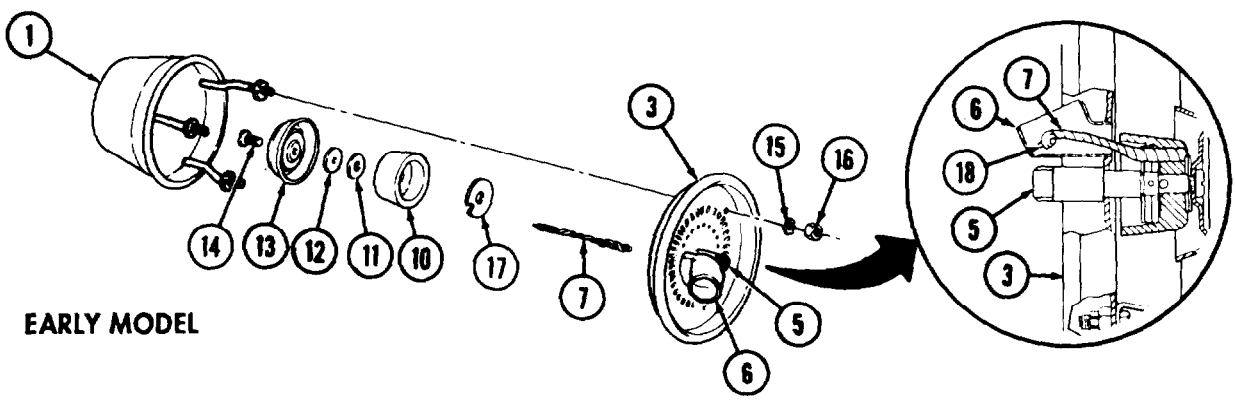

EARLY MODEL

17-21. PERSONNEL HEATER BURNER MAINTENANCE (Contd)

NOTE

The burner is installed the same for early and late model heaters. This procedure is for early model heaters.

1. Install new gasket (19) and new O-ring (20) on burner (21).
2. Install burner (21) on heat exchanger (23) and heater housing (22) with four hook bolt and clamps (24). Tighten four nut-assembled lockwashers (25).
3. Install ground strap (27) on hook bolt and clamp (24) with new nut-assembled lockwashers (26).
4. Install ground strap (27) on heater housing (22) with screw (30), new lockwasher (28), and new nut-assembled lockwashers (29).

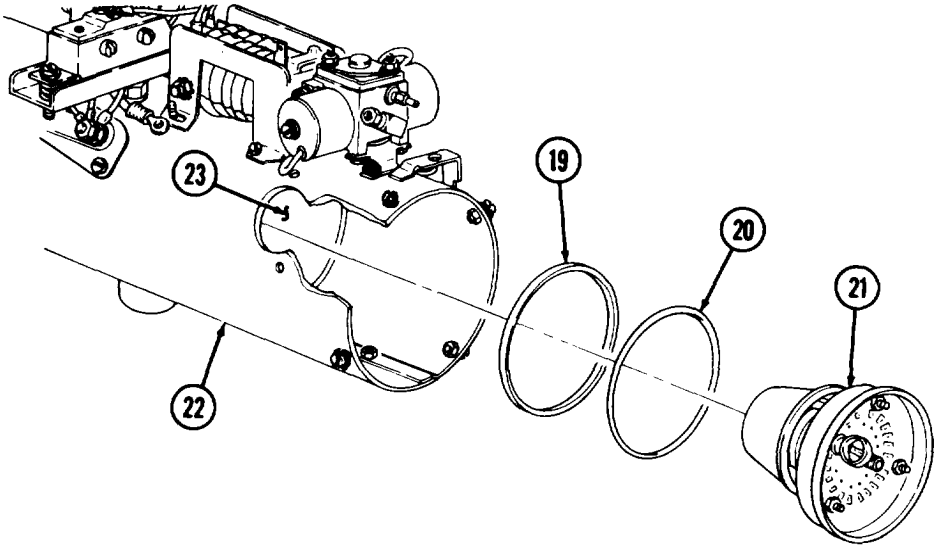

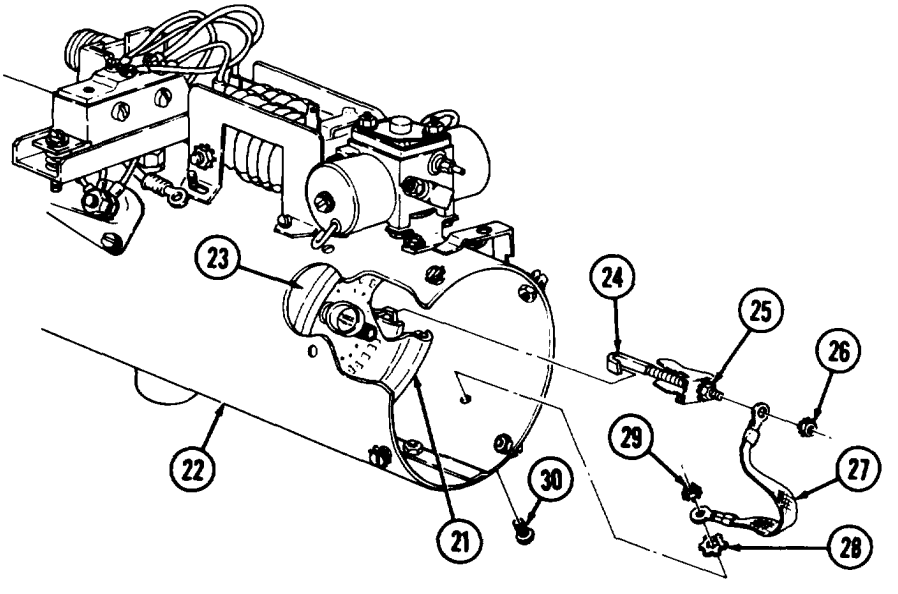

FOLLOW-ON TASK Install personnel heater fuel line and blower housing (para. 17-19).

17-22. PERSONNEL HEATER OVERHEAT SWITCH REPLACEMENT

THIS TASK COVERS:

a. Removal **b. Installation**

INITIAL SETUP

APPLICABLE MODELS
All

TEST EQUIPMENT
Multimeter (Appendix B, Item 115)

TOOLS
General mechanic's tool kit (Appendix B, Item 1)
Tool kit, electrical (Appendix B, Item 106)

MATERIALS/PARTS
Two nut-assembled Iockwashers (Appendix D, Item 262)
Two screw-assembled Iockwashers (Appendix D, Item 405)

REFERENCES (TM)
TM 9-2320-260-20
TM 9-2320-260-34P-2

EQUIPMENT CONDITION
Personnel heater removed (TM 9-2320-260-20).

a. Removal

NOTE

- The overheat switch is removed basically the same for early and late model heaters. This procedure is for early model heaters.
- Tag wires for installation.

1. Remove flame detector switch (para. 17-15).
2. Remove nut-assembled lockwashers (1) and shutoff valve lead (2) from overheat switch (8). Discard nut-assembled lockwashers (1).
3. Remove nut-assembled lockwashers (9), receptacle lead (3), thermostat lead (4), and ignition control lead (5) from overheat switch (8). Discard nut-assembled lockwasher (9).
4. Remove two screw-assembled lockwashers (7) and overheat switch (8) from heater housing (6). Discard screw-assembled lockwashers (7).

b. Installation

1. Install overheat switch (8) on heater housing (6) with two new screw-assembled lockwashers (7).
2. Install ignition control lead (5), thermostat lead (4), and receptacle lead (3) on overheat switch (8) with new nut-assembled lockwasher (9).
3. Install shutoff valve lead (2) on overheat switch (8) with new nut-assembled lock washer (l).
4. Install flame detector switch (para. 17-15).

17-22. PERSONNEL HEATER OVERHEAT SWITCH REPLACEMENT (Contd)

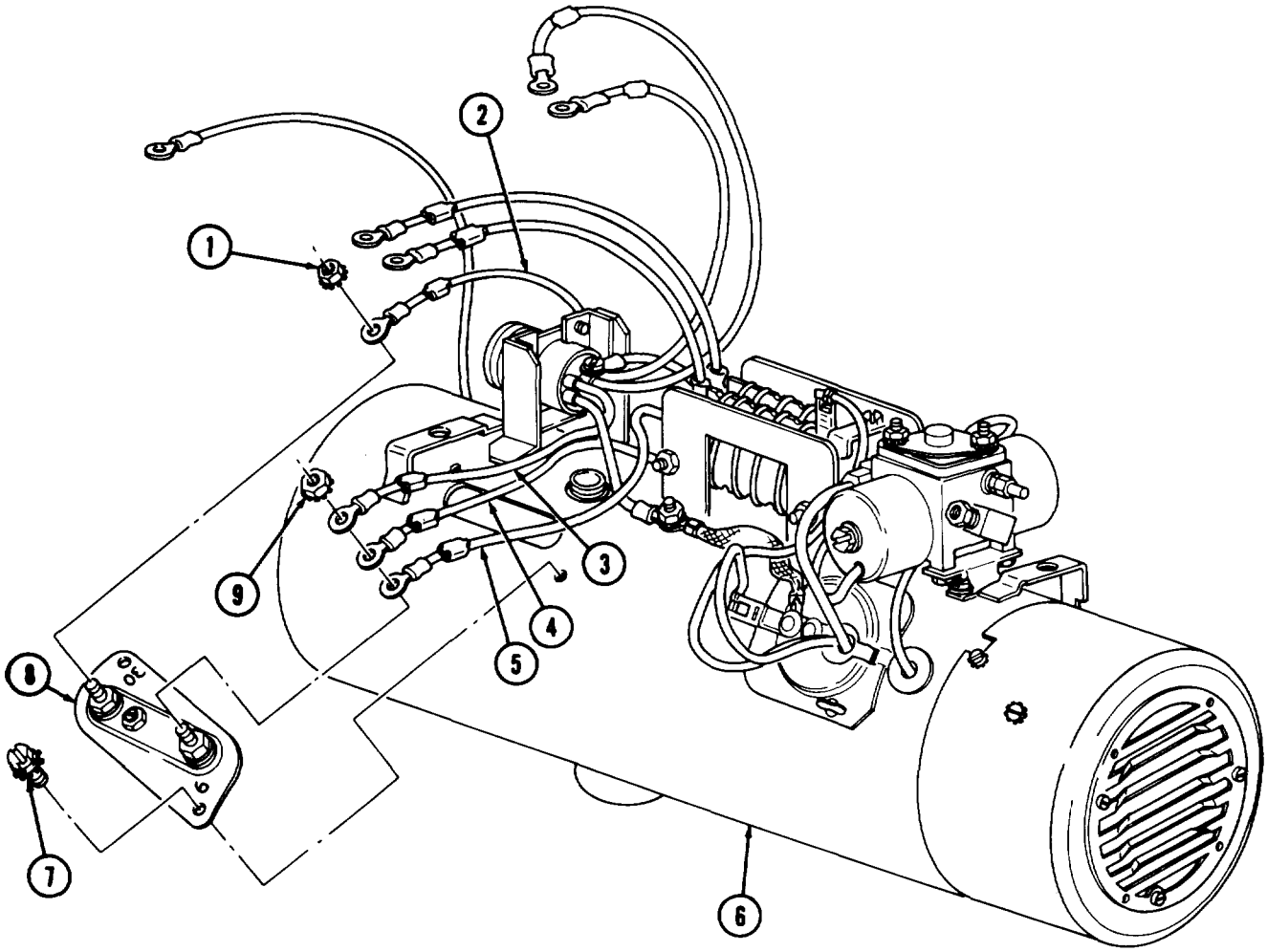

FOLLOW-ON TASK: Install personnel heater (TM9-2320-260-20).

17-23. PERSONNEL HEATER RECEPTACLE REPLACEMENT

THIS TASK COVERS:

a. Removal **b. Installation**

INITIAL SETUP

APPLICABLE MODELS
All

TEST EQUIPMENT
Multimeter (Appendix B, Item 115)

TOOLS
General mechanic's tool kit (Appendix B, Item 1)
Tool kit, electrical (Appendix B, Item 106)

MATERIALS/PARTS
Four screw-assembled lockwashers (Appendix D, Item 403)

MATERIALS/PARTS (Contd)
Three screw-assembled lockwashers (Appendix D, Item 386)
Two nut-assembled lockwashers (Appendix D, Item 262)

REFERENCES (TM)
TM 9-2320-260-20
TM 9-2320-260-34P-2

EQUIPMENT CONDITION
Personnel heater removed (TM 9-2320-260-20).

a. Removal

NOTE

- Perform this procedure for early models.
- Tag all wires for installation.

1. Release two dzus fasteners (11) and remove guard (10) from heater housing (12).
2. Remove screw-aesembled lockwasher (2) and restriction solenoid lead (3) from receptacle (19). Discard screw-assembled lockwasher (2).
3. Remove nut-assembled lockwasher (16) and receptacle lead (17) from overheat switch (14). Discard nut-assembled lockwashers (16).
4. Remove screw-assembled lockwashers (7) and (8) and leads (5) and (4) from flame detector switch (15). Discard screw-assembled lockwashers (7) and (8).
5. Remove nut-assembled lockwasher (6) and receptacle ground lead (18) from stud (13). Discard nut-assembled lockwasher (6).
6. Remove four screw-assembled lockwashers (1) and receptacle (19) from bracket (9). Discard screw-assembled lockwashers (1).

b. Installation

1. Install receptacle (19) on bracket (9) with four new screw-assembled lockwashers (l).
2. Install receptacle ground lead (18) on stud (13) with new nut-aesembled lockwasher (6).
3. Install leads (4) and (5) on flame detector switch (15) with new screw-assembled lockwashers (8) and (7).
4. Install receptacle lead (17) on overheat switch (14) with new nut-assembled lockwasher (16).
5. Install restriction solenoid lead (3) on receptacle (19) with new screw-assembled lockwasher (2).
6. Position guard (10) on heater housing (12) and install with two dzus fasteners (11).

17-23. PERSONNEL HEATER RECEPTACLE REPLACEMENT (Contd)

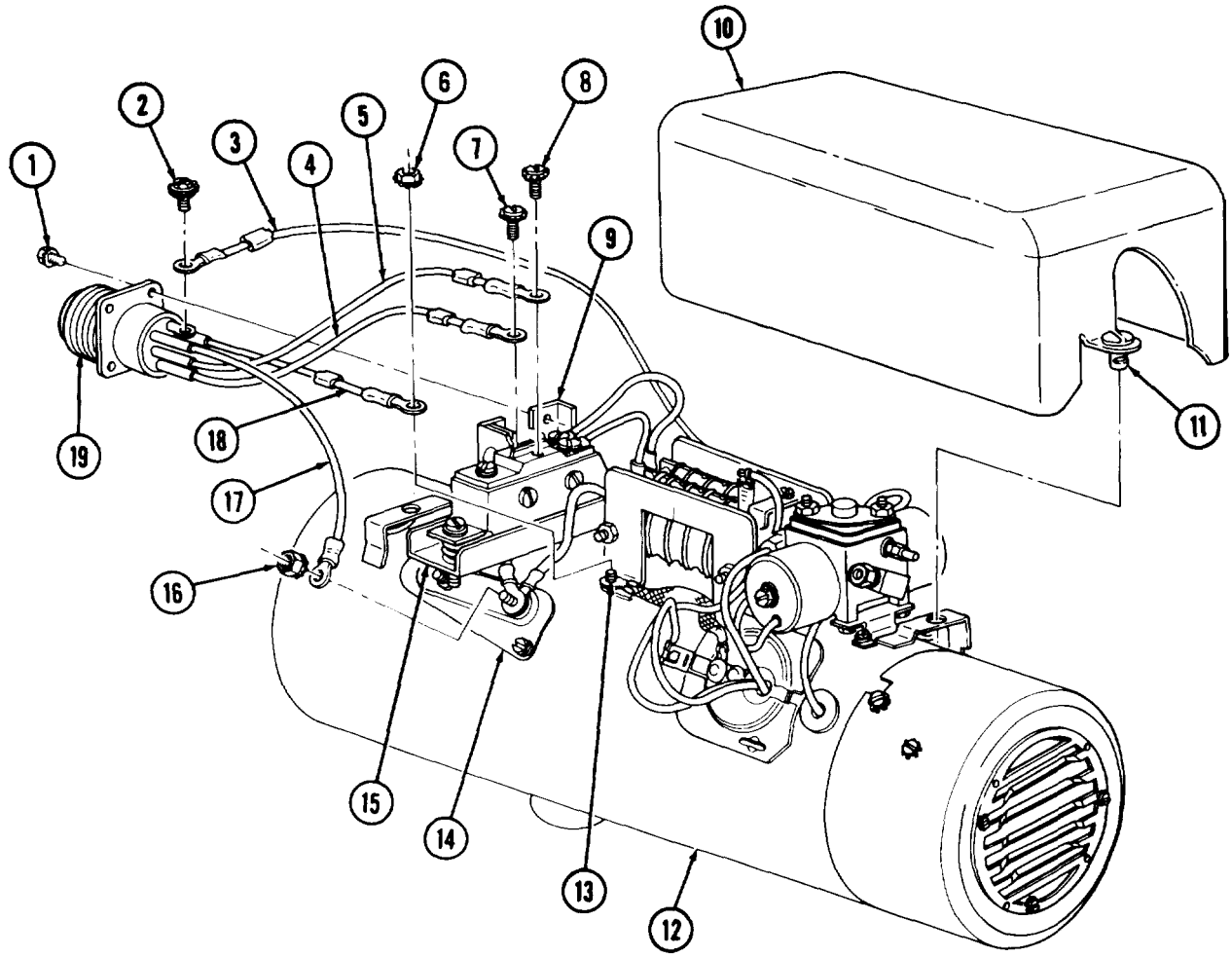

FOLLOW-ON TASK Install personnel heater (TM 9-2320-260-20).

17-24. PERSONNEL HEATER HEAT EXCHANGER MAINTENANCE

THIS TASK COVERS:

a. Removal
b. Cleaning and Inspection
c. Installation

INITIAL SETUP

APPLICABLE MODELS
All

TEST EQUIPMENT
Multimeter (Appendix B, Item 115)

TOOLS
General mechanic's tool kit (Appendix B, Item 1)
Tool kit, electrical (Appendix B, Item 106)

MATERIALS/PARTS
Three screw-assembled lockwashers (Appendix D, Item 380)
Drycleaning solvent (Appendix C, Item 46)
Rag (Appendix C, Item 32)

REFERENCES (TM)
TM 9-2320-260-34P-2

EQUIPMENT CONDITION
- Personnel heater flame detector switch removed (para. 17-15).
- Personnel heater burner removed (para. 17-21).

GENERAL SAFETY INSTRUCTIONS
- Keep fire extinguisher nearby when working with drycleaning solvent.
- Compressed air source will not exceed 30 psi (207 kpa).
- Eyeshields must be worn when cleaning with compressed air.

NOTE

The heat exchanger is replaced the same for early and late model heaters. This procedure covers the early model heater.

a. Removal

1. Remove three screw-assembled lockwashers (4) from heater housing (5). Discard screw-assembled lockwashers (4).
2. Separate heater housing (5) and remove heat exchanger (3).

b. Cleaning and Inspection

WARNING

- Drycleaning solvent is flammable and will not be used near open flame. Use only in well-ventilated places. Failure to do so may result in injury to personnel.
- Compressed air source will not exceed 30 psi (207 kPa). When cleaning with compressed air, eyeshields must be worn. Failure to wear eyeshields may result in injury to personnel,

1. Clean heat exchanger (3) and inside bore of heater housing (5) with drycleaning solvent and rag. Dry with compressed air.
2. Inspect heat exchanger (3) for bends, cracks, stripped threads, and scoring. Repair stripped threads if damaged. Replace heat exchanger (3) if bent, cracked, or scored.

17-24. PERSONNEL HEATER HEAT EXCHANGER MAINTENANCE (Contd)

c. Installation

Spread heater housing (5) and install heat exchanger (3) in heater housing (5) with three new screw-assembled lockwashers (4). Ensure exhaust tube (2) and flame detector switch adapter (1) extend through holes of heater housing (5) properly.

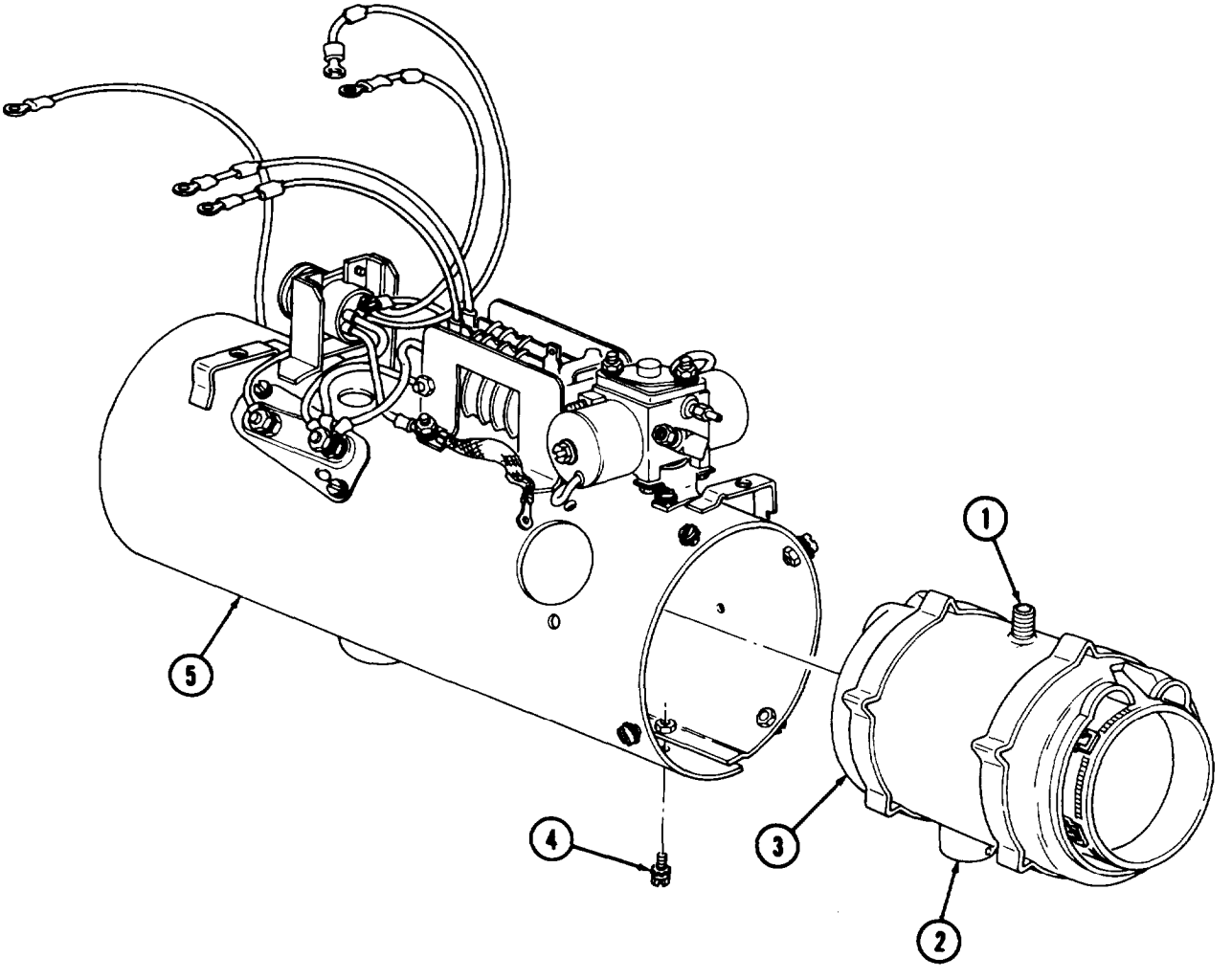

FOLLOW-ON TASKS: ● Install personnel heater burner (para. 17-21).
● Install personnel heater flame detector switch (para. 17-15).

17-25. PERSONNEL HEATER TESTING

THIS TASK COVERS:

a. Preparation
b. Ignition Test
c. Flame Detector Switch Test
d. Fuel Control Valve Testing
e. Blower Motor Test
f. Overheat Switch Test
g. Test Equipment Removal

INITIAL SETUP

APPLICABLE MODELS
All

TEST EQUIPMENT
Flowmeter (Appendix B, Item 146)
Multimeter (Appendix B, Item 115)

TOOLS
General mechanic's tool kit (Appendix B, Item 1)
Tool kit, electrical (Appendix B, Item 106)

MATERIALS/PARTS
Insulation varnish (Appendix C, Item 17)

REFERENCES
TM 9-2320-260-20
TM 9-2320-260-34P-2

EQUIPMENT CONDITION
Fuel burning personnel heater removed (TM 9-2320-260-20).

GENERAL SAFETY INSTRUCTIONS
- Do not perform procedure in enclosed areas.
- Keep fire extinguisher nearby when working with open fuel lines.
- Do not perform procedure near open flame, smoking, or sparking object.
- Do not handle personnel heater with bare hands, wear hand protection at all times.
- Do not remove heater from test equipment until cool.

a. Preparation

WARNING

- Exhaust gases can kill. Do not perform this task in enclosed areas. Ensure work area is well-ventilated and exhaust fumes are directed away from test area.
- Do not perform this procedure while smoking or within 50 feet of sparks or open flame. Fuel is flammable and can explode, causing injury or death to personnel and damage to equipment.
- Do not handle personnel heater with bare hands, wear hand protection at all times.

NOTE

- This procedure covers testing of fuel burning personnel heater, early model 10530B and late model 10530-A24.
- Perform "preparation" subtask before performing any test and perform "test equipment removal" after each test is complete.
- Heater must be tested in same position as mounted on vehicle.
- The van primary and van secondary personnel heaters are tested the same.

1. Connect heater (6) to test equipment using schematic on next page.

NOTE

Fuel pump, fuel filter, heater, wiring harness, fuel tubing, and control box must be the same type installed in vehicle.

17.25 PERSONEL HEATER TESTING (Contd)

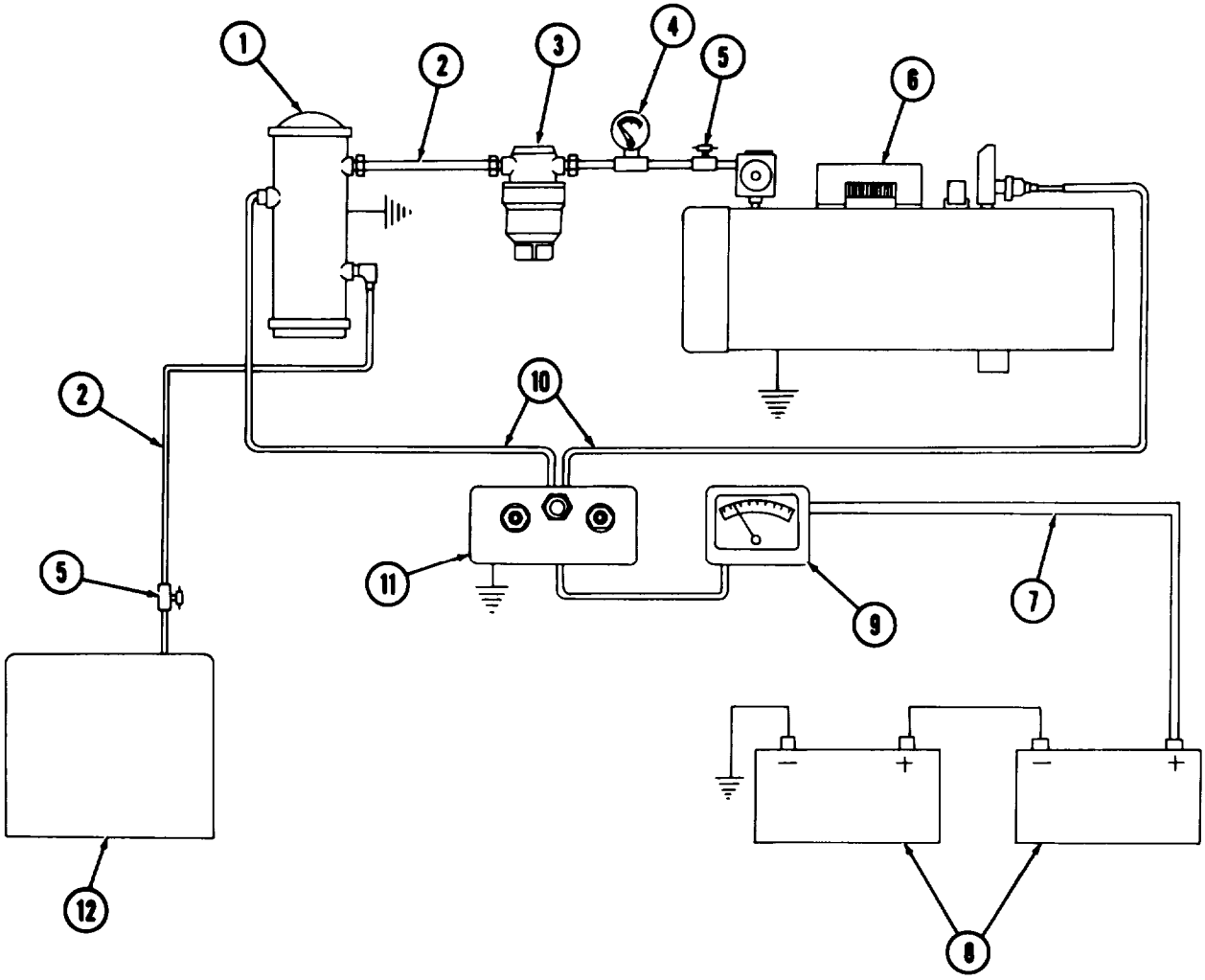

KEY TO TEST SCHEMATIC

1. Electric fuel pump
2. Fuel tubing
3. Fuel filter
4. Fuel flowmeter
5. Fuel shutoff valve
6. Heater
7. Power source lead
8. 24-volt DC power source
9. Multimeter
10. Wiring harness
11. Control box
12. Fuel container

17-25. PERSONNEL HEATER TESTING (Contd)

2. Turn two dzus fasteners (6) and remove guard (5) from heater housing (11).
3. Disconnect lead (19) from 24-volt power source (20).

NOTE

Disconnect igniter lead from circuit board for late model heaters.

4. Disconnect igniter lead (3) from ignition control unit (2).
5. Remove nut-assembled lockwasher (15), shutoff valve lead (16), nut-assembled lockwashers (14), and thermostat lead (13) from overheat switch (12).
6. Connect hose (8) to bleed screw (4) on fuel control valve (7) and place other end of hose (8) in container (9).
7. Connect lead (19) to 24-volt power source (20).
8. Open fuel shutoff valves (18).

NOTE

Have drainage container ready to catch fuel.

9. Place switch (24) in LO position. Place switch (22) in START position and hold. Open bleed screw (4) and let fuel flow from bleed screw (4) until no air bubbles are observed in fuel.
10. Place switch (22) in OFF position. Close bleed screw (4).
11. Install thermostat lead (13) and shutoff valve lead (16) on overheat switch (12) with nut-assembled Iockwashers (14) and (15).

NOTE

Connect igniter lead to circuit board for late model heaters.

12. Connect igniter lead (3) on ignition control unit (2).

b. Ignition Test

NOTE

Ignition time is the interval from activating control box switch to START position until indicator lamp illuminates.

1. Place switch (22) in START position and hold. Record time interval from activating switch (22) until indicator lamp (23) illuminates. During this time interval, record ignition amperage on multimeter (21).
2. If ignition time exceeds three minutes, or if ignition amperage exceeds 15 amperes, check fuel flow components and replace damaged parts (paras. 17-15 through 17-22, as necessary).
3. Place switch (22) in OFF position.

c. Flame Detector Switch Test

1. Place switch (22) in START position and hold.
2. When indicator lamp (23) illuminates, place switch (22) in RUN position.
3. If indicator lamp (23) does not light, adjustor replace flame detector switch (1) (para. 17-15).
4. Place switch (22) in OFF position. Burning should stop within thirty seconds and blower motor (10) within three minutes. Replace or adjust flame detector switch (1) (para. 17-15) if time exceeds limits.

d. Fuel Control Valve Testing

1. Place switch (22) in START position and hold.
2. When indicator lamp (23) illuminates, place switch (22) in RUN position.

17-25. PERSONNEL HEATER TESTING (Contd)

3. Check fuel consumption at flowmeter (17). Fuel consumption should be 0.018-0.025 1b/min (0.008-0.011 kg/min) at low heat, and 0.035-0.043 lb/rein (0.016-0.020 kg/rein) at high heat. If fuel consumption rate is not within limits, replace fuel control valve (7) (para. 17-16).
4. Check operating amperage at multimeter (21). If operating amperage exceeds 10 amperes, check heater wiring and replace damaged parts (paras. 17-15 through 17-22, as necessary).
5. Place switch (22) in OFF position.

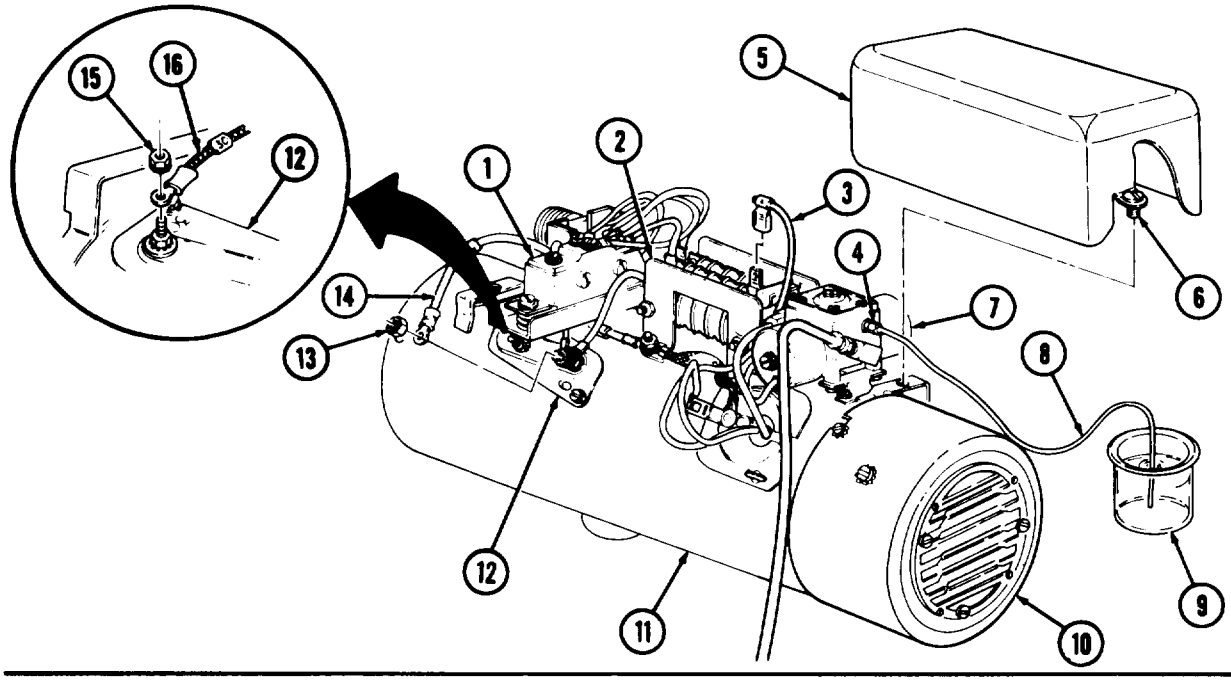

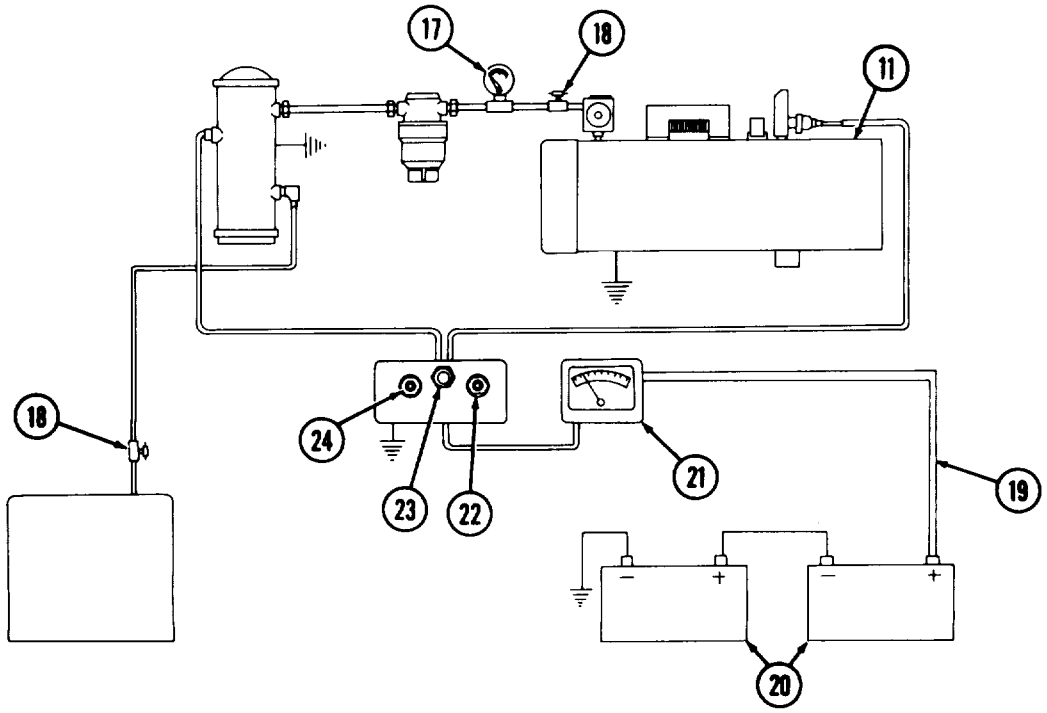

17-25. PERSONNEL HEATER TESTING (Contd)

NOTE

Perform steps 6 through 39 for late model heaters.

6. Ensure power source is disconnected. Turn two dzus fasteners (2) and remove guard (1) from heater housing (3).
7. Loosen nut (4) and disconnect fuel tube (5) from fuel control valve outlet (7).
8. Connect one end of fuel tubing (6) to fuel control valve outlet (7) and place other end in graduated beaker or similar container.
9. Disconnect lead (18) from shunt resistor (19) to disable the blower motor and igniter.
10. Disconnect lead (12) from fuel control valve (16) to disable fuel control valve (16).
11. Connect power source and place HI-LO switch to LO position.

NOTE

Have drainage container ready to catch fuel.

12. Open bleed valve (17) on fuel control valve (16) to remove air from fuel flow. Close bleed valve (17) when fuel flow is free of air bubbles.
13. Connect lead (12) to fuel control valve (16).
14. Disconnect lead (11) from fuel control valve (16).
15. Partially raise lead (12) and place switch in START position.
16. Connect jumper lead (14) to lead terminals (13) and (15). A clicking sound should increase in rate.
17. Connect 50 in. (127 cm) long, 0.187 in. (0.474 cm) diameter clear tubing (20) to bleed valve (17) and position the open end of tube (20) at least 45 in. (114 cm) higher than bleed valve (17). Open bleed valve (17) and allow fuel to flow up the tube (20) until it stabilizes.
18. From bleed valve (17) measure vertically the height of fuel. Fuel should be between 36-40 in. (91-102 cm) from bleed valve (17). If adjustment is necessary, proceed to step 18. If not, proceed to **step 19.**
19. Adjust height (regulated pressure) by turning the regulated pressure adjusting screw (10). If height will not adjust or stabilize, then replace fuel control valve (16) (para. 17-16). Close bleed valve (17).
20. Disconnect tube (20) from bleed valve (17).
21. Disconnect jumper lead (14) from lead terminals (13) and (15).

NOTE

Low fuel flow rate must be set before high fuel flow can be set.

22. Operate fuel pump for one minute and stop.
23. Repeat steps 16 and 17.
24. Disconnect jumper lead (14) from lead terminals (13) and (15).
25. Record amount of fuel accumulated in graduated beaker. The fuel flow rate must be 0 or 10 cc per minute.
26. If flow is not within limits, turn adjusting screw (9) clockwise to lower flow rate or counterclockwise to raise flow rate. If flow rate is not obtainable, replace fuel control valve (16) (para. 17-16).
27. Place HI-LO switch in HI position.
28. Operate fuel pump for one minute and stop.
29. Repeat steps 16 and 17.
30. Disconnect jumper lead (14) from lead terminals (13) and (15).

17-25. PERSONNEL HEATER TESTING (Contd)

31. Record amount of fuel accumulated in graduated beaker. High fuel flow rate should be 20 cc per minute.
32. If flow rate is not within limits, turn adjusting screw (8) clockwise to lower flow rate or counter-clockwise to raise flow rate. If flow rate is not obtainable, replace fuel control valve (16) (para. 17-16).
33. Apply insulating varnish to adjusting screws (8), (9), and (10).
34. Connect lead (12) to fuel control valve (16).
35. Connect lead (18) to shunt resistor (19).
36. Remove fuel tubing (6) from fuel control valve outlet (7).
37. Install fuel tube (5) to fuel control valve outlet (7) and secure with nut (4).
38. Disconnect test equipment from heater assembly.
39. Install guard (1) on heater housing (3) with two dzus fasteners (2).

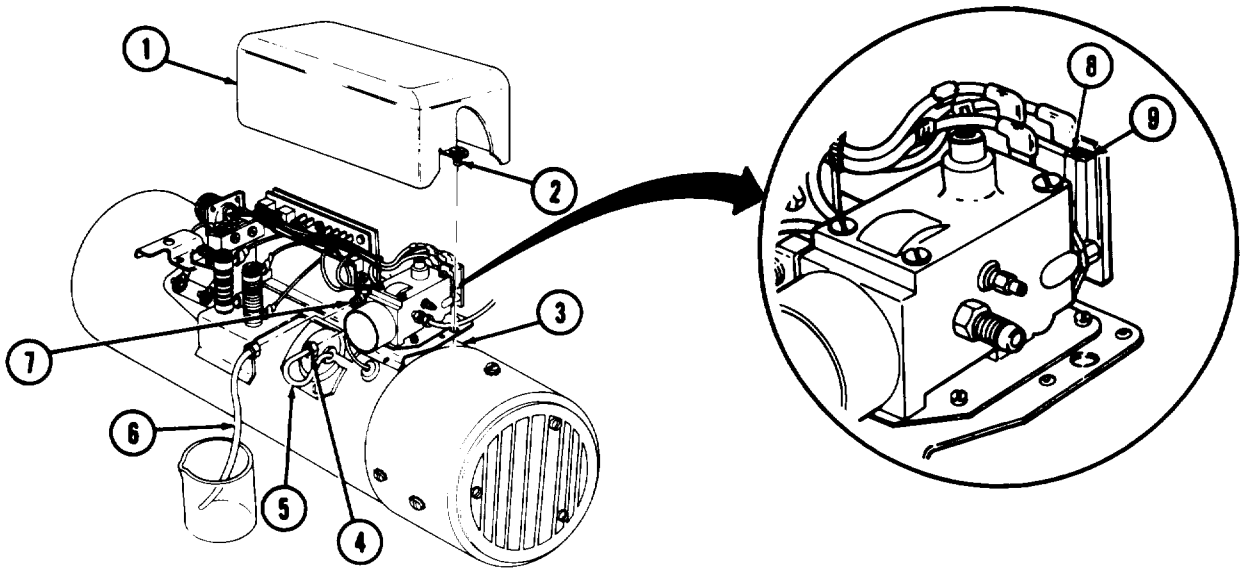

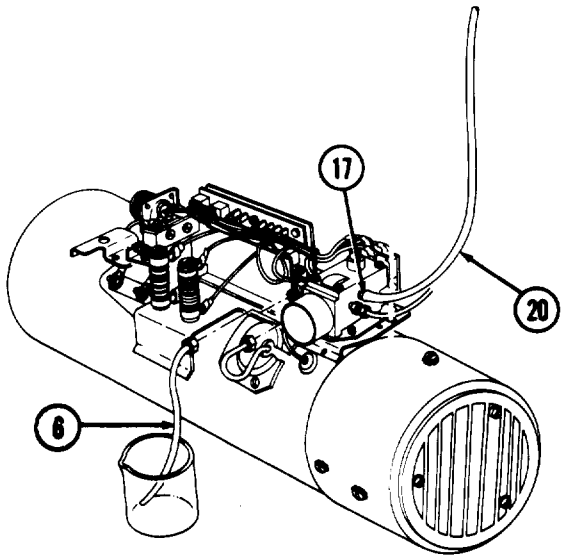

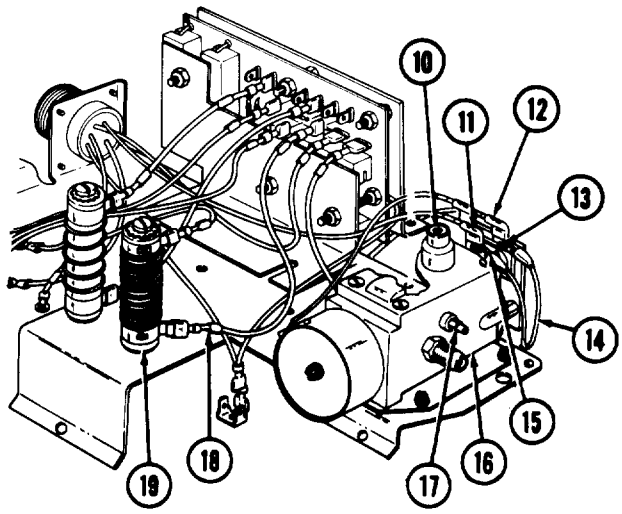

17-25. PERSONNEL HEATER TESTING (Contd)

e. Blower Motor Test

1. Place switch (5) in START position and hold.
2. When indicator lamp (6) illuminates, place switch (5) in RUN position. Allow heater (2) to run for a few minutes.
   a. If blower motor (9) does not run, replace blower motor (9) (para. 17-20).
   b. If blower motor (9) runs, but heater (2) fails to ignite, replace ignition components (paras. 17-15 through 17-22).

NOTE

Perform steps c through e for late model personnel heaters.

   c. If shunt resistor (12) glows bright, remove screw-assembled lockwasher (11) and blower motor lead (14) from flame detector switch (13).
   d. If shunt resistor (12) turns dull, replace blower motor (9) (para. 17-20).
   e. If shunt resistor (12) continues to glow bright, check heater wiring.

f. Overheat Switch Test

1. Place switch (5) in START position.
2. When indicator lamp (6) illuminates, place switch (5) in RUN position and allow heater (2) to operate for one minute.
3. Partially restrict air inlet with a sheet of cardboard or sheet metal. Overheat switch (10) should activate and shut down heater (2) within five minutes.
4. If heater (2) does not shut down after five minutes, replace overheat switch (10) (para. 17-22).

g. Test Equipment Removal

WARNING

Allow time for heater to cool before removing from test equipment. Failure to do so may result in injury to personnel or damage to equipment.

1. Close fuel shutoff valves (1).
2. Disconnect lead (3) from power source (4).
3. Remove heater (2) from test equipment.
4. Place guard (7) on heater (2) and turn two dzus fasteners (8) to secure.

17-25. PERSONNEL HEATER TESTING [Contd)

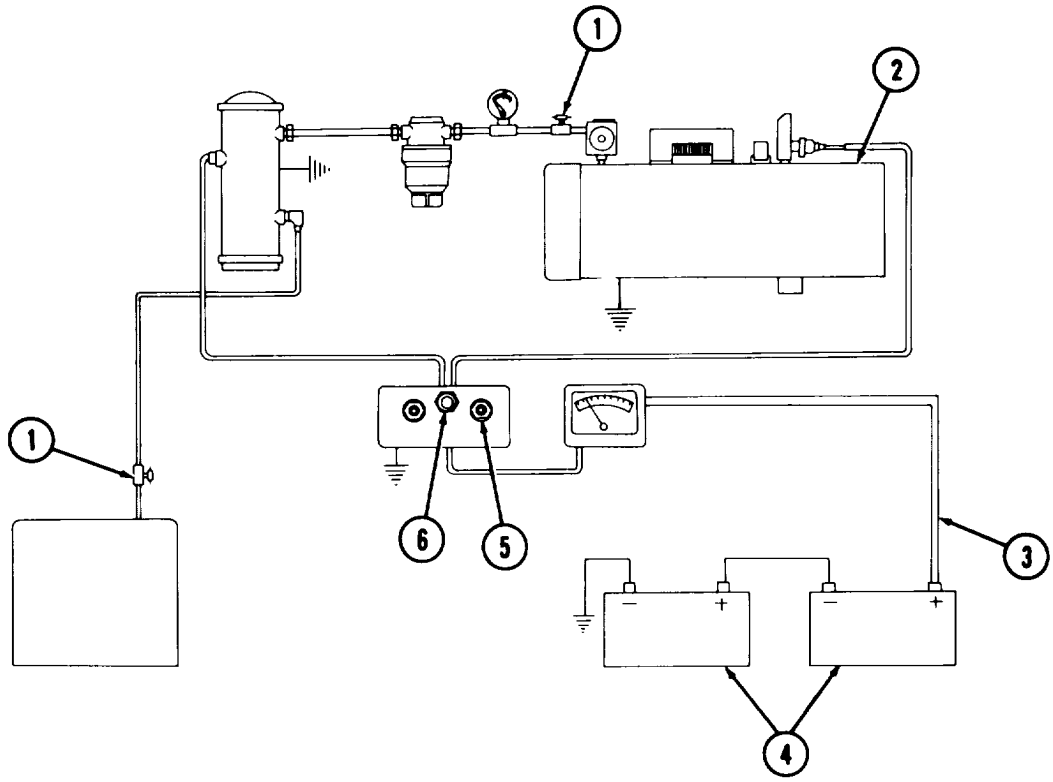

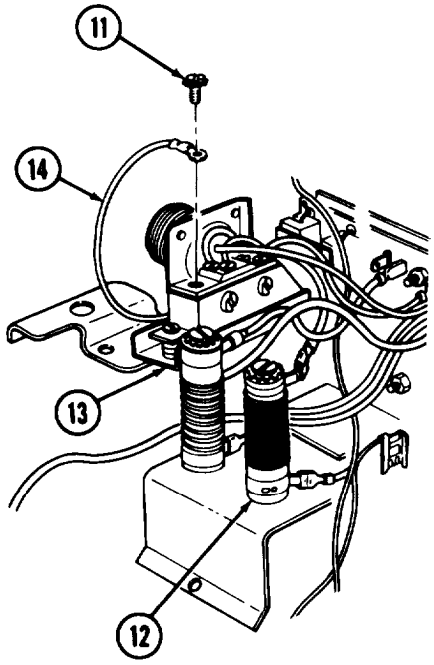

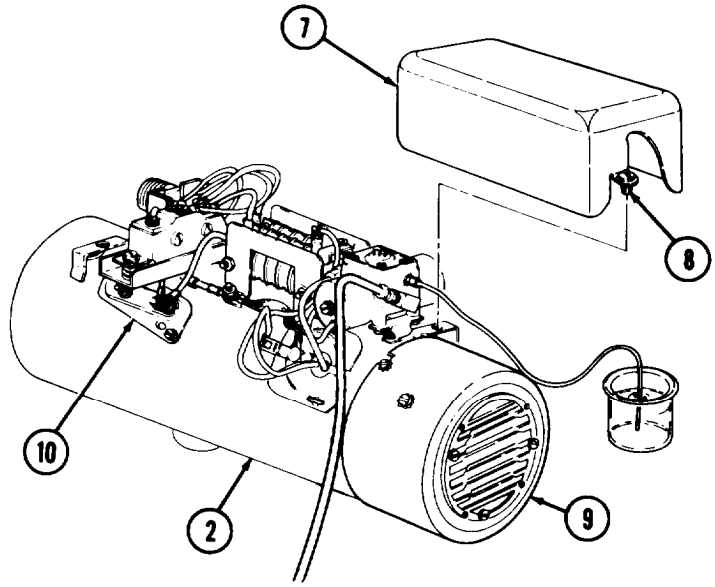

FOLLOW-ON TASK: Install fuel burning personnel heater (TM 9-2320-260-20).

17-26. THERMAL BARRIER INSULATION REPLACEMENT

THIS TASK COVERS:

a. Removal

b. Installation

INITIAL SETUP

APPLICABLE MODELS
All

MATERIALS/PARTS
Adhesive (Appendix C, Item 2)

REFERENCES (TM)
TM 9-2320-260-20
TM 9-2320-260-34P-2

EQUIPMENT CONDITION
- Driver's seat removed (TM 9-2320-260-20).
- Companion seat removed (TM 9-2320-260-20).

NOTE

All thermal barrier insulation is replaced the same. This procedure covers the left rear upper insulation panel only.

1. Pull panel (2) away from cab interior (1). Discard panel (2) if irreparable damage occurs when removing.
2. Clean all remaining insulating material and adhesive from contact surface areas.

b. Installation

CAUTION

Once panel is coated with adhesive and put in place, it cannot be moved. Be careful not to place panel in the wrong position.

NOTE

Make all necessary cutouts and slits in panels before installation, Shiny side of panel must face outward.

1. Place panel (2) in cab interior (1) to check for fit.
2, Remove panel (2) and coat contact areas with adhesive.
3. Install panel (2) on cab (1) and press firmly into place.

17.26 THERMAL BARRIER INSULATION REPLACEMENT (Contd)

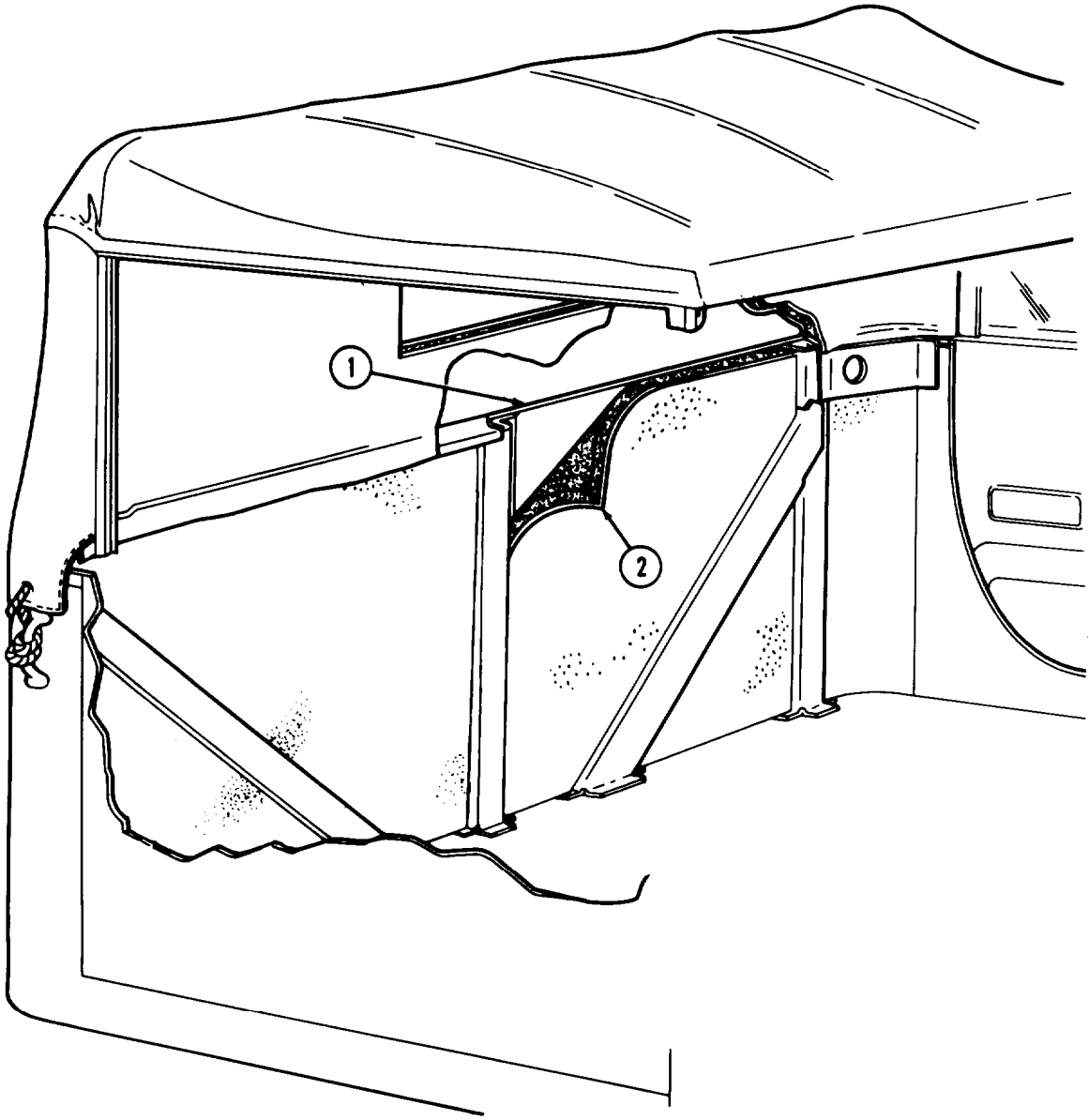

FOLLOW-ON TASKS:
- Install driver's seat (TM 9-2320-260-20).
- Install companion seat (TM 9-2320-260-20).

APPENDIX A
REFERENCES

A-1. SCOPE

The following should be consulted for latest changes to, or revisions of, references given in this appendix and for new publications or instructions relating to material covered in this manual:

a. Military Publications:

Consolidated Index of Army Publications and Blank Forms . . . . . DA PAM 25-30
Equipment Improvement Report and Maintenance Digest . . . . . TB 43-0001-39

b. General References:

Authorized Abbreviations and Brevity Codes AR310-50
Dictionary of United States Army Terms AR310-25
How to Conduct Training Exercises . . . . . FM 25-4
Topographical Symbols . . . . . FM 21-30

A-2. SUPPLY CATALOGS

The following Department of the Army Supply Catalogs pertain to this manual:

General Mechanic's Tool Kit (5180-00-177-7033) . . . . . SC 5180-90-N26
Shop Equipment, Automotive Field Maintenance
and Repair (4910-00-754-0705) . . . . . SC 4910-95-CL-A31
Shop Equipment, No. 2 Common Organizational Maintenance
and Repair (4910-00-754-0653)... . . . . SC 4910-95-CL-A72
Shop Equipment, No. 2 Supplemental Field Maintenance
and Repair (4910-00-754-0707). . . . . SC 4910-95-A63

A-3. FORMS

Refer to DA Pam 25-30 for an index of blank forms. Refer to DA Pam 738-750, The Army Maintenance Management System (TAMMS), for pertinent maintenance forms and explanation on use.

Product Quality Deficiency Report. . . . . SF Form 368
Recommended Changes to Publications and Blank Forms . . . . . DA Form 2028
Recommended Changes to Equipment Technical Publications . . . . . DA Form 2028-2

A-4. TECHNICAL MANUALS

Camouflage Materials . . . . . TM 5-200
Care, Maintenance, and Repair of Pneumatic Tires, Inner Tubes, and Radial Tires . . . . TM 9-2610-200-24
Cooling Systems: Tactical Vehicles . . . . . TM 750-254
Destruction of Tank-Automotive Equipment to Prevent Enemy Use . . . . . TM 750-244-6
Direct Support, General Support, and Depot Maintenance Manual
for starter, engine, electrical assembly (Delco-Remy model) . . . . . TM 9-2920-242-35
Direct Support, General Support, and Depot Maintenance Manual
for starter, engine, electrical assembly (Prestolite model) . . . . . TM 9-2920-248-35
Direct Support and General Support Maintenance Repair Parts and
Special Tools List for 5-Ton, 6x6, M809 Series Trucks (Diesel) . . . . . TM 9-2320-260-34P
Grinding Machine, Valve Face, Bench Mounting . . . . . TM 9-4910-484-10
Inspection, Care and Maintenance of Antifriction Bearings . . . . . .TM 9-214

APPENDIX A (Contd)

A-4. TECHNICAL MANUALS (Contd)

Maintenance, Direct and General Support Level Generator Assembly
(Pestolite Model AMA-5102VT)
(Leece-Neville Models 3002AC, 3002AD, and 3002AE)
(NSN 2920-00-808-2483), (Models 5504AA, 5504AB) (2920-00-475-1446).
(Model 2184AC) (2820-00-782-1955), and (Model 5300GP) (2920-00-818-8635) . . . . . TM 9-2920-225-34
Marking, Packing, and Shipment of Supplies and Equipment
General Packaging Instructions for Field Units . . . . . TM 746-10
Materials Used for Cleaning, Preserving, Abrading and Cementing Ordnance
Material and Related Materials Including Chemicals . . . . . TM 8-247
Operator's Manual for 5-Ton, 6x6, M809 Series Trucks (Diesel) . . . . . TM 9-2320-260-10
Operator's Manual for Reliner, Brake Drum, Floor Mounted . . . . . TM 9-4910-443-12
Operator's Manual for Lathe, Brake Drum, Floor Mounted . . . . . TM 9-4910-482-10
Operator's Manual: Welding Theory and Application . . . . . TM 9-237
Painting Instructions for Field Use . . . . . TM 43-0139
Unit Maintenance for 5-Ton, 6x6, M809 Series Trucks (Diesel) . . . . . TM 9-2320-260-20
Use and Care of Hand Tools and Measuring Tools . . . . . TM 9-243

A-5. TECHNICAL BULLETINS

Calibration and Repair Requirements for the Maintenance
of Army Material . . . . . TB 43-180
Color, Marking, and Camouflage Painting of Military Vehicles,
Construction Equipment, and Material Handling Equipment . . . . . TB 43-0209
Quarterly Equipment Improvement Report and Maintenance Digest
Tank and Automotive Equipment . . . . . TB 43-0001-39
Rustproofing Procedures . . . . . TM 43-0213

A-6. OTHER PUBLICATIONS

Army Medical Department Expendable/Durable Items . . . . . CTA 8-100
Calibration Systems Requirements MIL-C-45662
Expendable/Durable Items
(Except Medical, Class X, Repair Parts, and Heraldic Items) CTA-50-970
First Aid for Soldiers . . . . . PM 21-11
Gage Inspection MIL-STD-120
Inspection Equipment, Acquisition, Maintenance and Disposition MIL-L-45607
Inspection, Liquid Penetrant Methods MIL-I-6866
Inspection Process, Magnetic Particle MIL-I-6868
Lubrication Order, Truck, Chassis: 5-Ton, 6x6, M809 Series Trucks (Diesel) . . . . . LO 9-2320-260-12
Official Nomenclature, Names and Designations MIL-HBK-63038-2
Standard Assembly Dimensions for Screw Inserts MS33537

APPENDIX B
COMMON AND SPECIAL TOOLS LIST

B-1. SCOPE

This appendix lists special and common tools outside the General Mechanic's Tool Kit which you will need when servicing the M809 series vehicles.

B-2. EXPLANATION OF COLUMNS

a. Column (1) - Reference Code Number. This number is assigned to each entry in the listing and is referenced in the "Initial Setup" of applicable tasks under the heading of "Special Tools," 'Test Equipment," or "Tools."

b. Column (2) - Nomenclature. Name or identification of special tool or common tool.

c. Column (3) - Part Number. This identifies the manufacturer's part number or catalog number assigned to each tool or kit.

d. Column (4) - National/NATO Stock Number. This is the National Stock Number assigned to each tool or kit; use it to request or requisition the tool or kit.

e. Column (6) - Supply Catalog. This is the supply catalog number in which the common tool can be found. Special tools are not found in supply catalogs.

APPENDIX B
COMMON AND SPECIAL TOOLS LIST

(1) REFERENCE CODE NUMBER	(2) NOMENCLATURE	(3) PART NUMBER	(4) NATIONAL/NATO STOCK NUMBER	(5) SUPPLY CATALOG
1	General Mechanic's Tool Kit	SC5180-90-CL-N26	5180-00-177-7033	—
2	Torque Wrench, 3/4-in. dr.	TESI800A	5120-01-118-3679	4910-95-CL-A31
3	Torque Wrench, 1/2-in. dr.	A-A-2411	5120-00-640-6364	4910-95-CL-A31
4	Torque Wrench, 3/8-in. dr.	TE-12A	5120-00-230-6380	4910-95-CL-A31
5	Clutch Alinement Kit	A37M	5180-00-449-3785	4910-95-CL-A31
6	Brake Reliner	MILR13495TY1CL1	4910-00-173-5310	4910-95-CL-A31
7	Arbor Press	26A49	3444-00-449-7295	4910-95-CL-A31
8	Outside Micrometer	GGG-C105TY1CL1STA	5210-00-554-7134	4910-95-A63
9	Inside Micrometer	124B	5120-00-221-1921	4910-95-A63
10	Spring Tester	SPT	6635-00-641-7346	4910-95-A63
11	Dial Indicator	196A	5210-00-277-8840	4910-95-A63
12	Mounting Plate, Air Compressor	ST749	4910-00-159-8701	5180-00-762-1741
13	Cylinder Liner Clamp Set	3376669	5120-00-104-1816	5180-00-762-1741
14	Mechanical Puller Kit	PE12	5180-00-423-1596	4910-95-CL-A31
15	Ring Compressor	HC686	5120-00-223-8848	4910-95-A63
16	Depth Micrometer	445BZ-6RL	5210-00-619-4045	3470-95-A02
17	Brakedrum Lathe	4100	4910-01-028-9849	4910-95-CL-A31
18	2-3/8-in. Socket, 1-in. dr.	A-A-1392	5120-00-261-2844	4910-95-CL-A31
19	3/4-in. to 1-in. Adapter	A-A-2172	5120-00-227-8104	4910-95-CL-A72
20	2-1/8-in. Socket, 1-in. dr.	A-A-1392	5120-00-235-5834	4910-95-CL-A31
21	Cup Retainer Wrench	ST-995	5120-00-150-7492	5180-00-762-1741
22	Spray Pattern Tester	3376350	3465-00-999-1501	5180-00-762-1741
23	Injector Body Wrench	ST-1298	4910-01-082-1346	—
24	3/4-in. dr. Socket Set	FED STD 353	5170-00-204-1999	4910-95-CL-A31
25	Locknut Wrench	3375166	4910-01-097-6928	—
26	Injector Test Stand	ST790	4910-00-896-0997	5180-00-762-1741
27	Test Stand Link	ST-790-331	4910-01-142-0198	—
28	Swivel Vise	ST302	4910-00-999-1506	5180-00-762-1741
29	Mounting Plate, Fuel Pump	3375133	4910-00-977-7505	5180-00-762-1741
30	Torque Multiplier	PD1201	5120-00-169-2986	4910-95-CL-A31
31	1-5/6-in. Socket, 3/4-in. dr.	1242	5120-00-232-5681	4910-95-CL-A31
32	Gage, Force, Mechanical (Bearing Preload Scale)	AAA-S-133	6670-00-254-4634	4910-95-CL-A72
33	Caliper, Vernier	6420	5210-01-113-1548	4910-95-CL-A31
34	2-1/4-in. Socket, 1-in. dr.	B107.1CL1STA	5120-00-261-2843	4910-95-CL-A31
35	Bearing Adapter	7950112	5120-00-795-0112	5180-00-762-1741
36	Guide Head Spacer	ST633	4910-00-150-5797	5180-00-762-1741
37	1-1/8-in. Socket, 3/4-in. dr.	1818	5120-00-239-0021	4910-95-CL-A31
38	Vise	504M2	5120-00-293-1439	4910-95-CL-A31
39	Spindle Bearing Remover	7950127	5120-00-378-4301	Special Tool
40	Oil Seal Replacer	7950129	5120-00-795-0129	Special Tool
41	Valve Refacer	K403CM	4910-00-540-4679	4910-95-CL-A31
42	Valve Seat Insert Tool	ST-257	4910-00-345-3708	—
43	Counterbore Cutter	ST662	4910-00-999-1208	—

APPENDIX B
COMMON AND SPECIAL TOOLS LIST (Contd)

(1) REFERENCE CODE NUMBER	(2) NOMENCLATURE	(3) PART NUMBER	(4) NATIONAL/NATO STOCK NUMBER	(5) SUPPLY CATALOG
44	Valve Guide Arbor	ST-663	3460-00-999-1173	5180-00-762-1741
45	Valve Seat Insert Staking Tool	ST-1124	4910-00-150-5844	5180-00-762-1741
46	Valve Seat Insert Extractor	ST-1279	5120-01-128-2679	5180-00-762-1741
47	Soft-head Hammer	57-530	5120-01-071-5356	4910-95-A62
48	Wheel Bearing Nut Wrench	7076968	5120-00-378-3139	—
49	Injector Sleeve Extractor	3375425	4910-00-150-5858	5180-00-762-1741
50	Injector Sleeve Mandrel	ST-1227	5120-00-981-3108	5180-00-762-1741
51	Injector Sleeve Expander Tool	ST880	3441-00-922-6699	5180-00-762-1741
52	Injector Sleeve Cutting Tool	ST884	4910-00-981-3105	5180-00-762-1741
53	Drill Press, Electric Portable	1550WITHSTAND	5130-00-204-2718	4910-95-CL-A01
54	Injector Sleeve Holding Tool	ST1179	5120-00-104-1795	5180-00-762-1741
55	Bead Cutting Tool	ST788	5110-00-932-2089	5180-00-762-1741
56	Timing Fixture	3375522	4910-00-999-1269	5180-00-762-1741
57	Injector and Valve Adjustment Kit	3823610	4910-00-548-7984	Special Tool
58	Feeler Gage	F71371	5120-00-221-1999	4910-95-B20
59	Torque Wrench Adapter	ST-669	5120-00-103-4687	—
60	Differential Flange Replacer	7950155	5120-00-079-0155	Special Tool
61	Tool Driver	ST1122	4610-00-150-5843	5180-00-762-1741
62	Valve Grinder	K403CM	4910-00-540-4679	4910-95-CL-A31
63	Drill Bit, 1/4-in.	206-1-4	5133-00-227-9658	4910-95-A62
64	Electric Drill	W-D-661	5310-00-293-1386	4910-95-A62
65	Idle Adjustment Tool	3375981	4910-00-150-5805	Special Tool
66	Engine Barring Tool	ST747	4910-00-150-5798	Special Tool
67	Crankshaft Flange Puller	ST887	4910-00-185-8500	Special Tool
68	1-1/16-in. Socket, 3/4-in. dr.	A-A-1394	5120-00-189-7928	4910-95-CL-A31
69	Straightedge	564000-36	6675-00-224-8807	49410-95-A63
70	Magnetic Tester	ST-1166	6635-01-128-2076	—
71	Brush	51064	7920-00-285-3037	4910-95-CL-A31
72	Brush	H-B-491	8020-00-297-6657	4910-95-CL-A31
73	Air Pressure Gage	3005456	4910-00-792-8304	Special Tool
74	Telescoping Gage Set	599-590	5210-00-473-9350	3470-95-A02
75	Universal Puller Kit	8708724	5180-00-338-6721	Special Tool
76	Cylinder Liner Puller	3376015	5120-01-143-2032	—
77	Cylinder Liner Driver	ST594	5120-00-999-1206	5180-00-762-1741
78	Gage Block	3376220	5210-01-157-3091	4910-95-A63
79	Valve Guide Driver	3375282	4910-01-097-6971	5180-00-762-1741
80	Valve Pin Extractor	ST1134	4910-00-150-5848	—
81	Valve Spring Compressor	GGG-L-350	5120-00-239-8686	4910-95-CL-A31
82	Vacuum Tester	ST-1257-A	4910-01-128-2691	—
83	Bearing Remover/Replacer	7950159	5120-00-795-0159	5180-00-762-1741
84	Rear Cover Oil Seal Driver	ST997	5120-00-150-5810	Special Tool
85	Dial Indicator Attachment	ST-1325	4910-01-097-6972	5180-00-762-1741

APPENDIX B
COMMON AND SPECIAL TOOLS LIST (Contd)

(1) REFERENCE CODE NUMBER	(2) NOMENCLATURE	(3) PART NUMBER	(4) NATIONAL/NATO STOCK NUMBER	(5) SUPPLY CATALOG
86	Cam Bushing Replacer	ST1228	5120-00-055-4013	—
87	Welding Rod	110FC	3439-00-027-0953	—
88	Fuel Injection Pump Tester Stand	11020200	4910-00-817-7431	—
89	Engine Repair Stand	11669412	4910-00-977-7506	5180-00-762-1741
90	Engine Mount Adapters	ST805	4910-00-150-5799	—
91	Bushing Installer	ST598	5120-00-978-0805	5180-00-762-1741
92	Main Bearing Cap Puller	ST1178	5120-01-141-5777	—
93	Drill and Reaming Fixture	ST1232	4910-01-139-4892	—
94	Wire Gage	GGG-G-17	5120-00-278-1248	—
95	Injector Leakage Tester	3375375	5120-01-029-6861	5180-00-762-1741
96	Companion Flange Replacer	7950147	5120-00-795-0147	Special Tool
97	Bearing Cone Adapter	7950090	5120-00-795-0090	—
98	Bearing Cup Replacer	7950082	5120-00-795-0082	Special Tool
99	Bearing Cup Remover/Replacer	7950079	5120-00-795-0079	Special Tool
100	Spring Pack Adjusting Tool	3375981	4910-00-150-5805	—
101	Travel Template	3375355	4910-01-074-0020	—
102	1-5/8-in. Socket, 1-in. dr.	A-A-1392	5120-00-189-7958	4910-95-CL-A31
103	Gear Pump Block Plate	ST844	5365-00-904-2159	5180-00-762-1741
104	Shaft Installation Tool	3375204	4910-01-118-3747	5180-00-762-1741
105	Torque Wrench, 1/4-in. dr.	TQSC6A	5120-01-112-9532	4910-95-CL-A31
106	Tool Kit, Electrical	7550526	5180-00-876-9336	4910-95-CL-A31
107	Wire Brush	8078883	7920-00-291-5815	4910-95-CL-A31
108	Injector Puller	3376000	5210-00-116-7604	—
109	Injector Puller	3375161	—	—
110	Transmission Maintenance Stand	MIL-S-45004	4910-00-529-8389	—
111	Oil Pump Boring Tool	3375206	4910-01-085-7824	—
112	Nano Reamer Set	7950124	5110-00-795-0124	Special Tool
113	Engine Oil Cooler Tester	3375253	6850-01-142-7389	—
114	Piston Ring Expander	PRS-8	5120-00-857-3190	4910-95-CL-A31
115	Multimeter	ANURB 105 C	6625-00-999-6282	4910-95-CL-A31
116	Retaining Ring Pliers	2600	5120-00-293-0044	4910-95-CL-A31
117	Soldering Gun	8200G3	3439-00-542-0396	4910-95-CL-A31
118	1-1/2-in. Socket, 3/4-in. dr.	47148	5120-00-293-0094	4910-95-A62
119	Wrench, Open-End, 1-1/2 - 1-5/16-in.	39A	5120-00-277-2323	4910-95-CL-A31
120	Rivet Gun	250K	5120-00-017-2849	4910-95-A74
121	1-1/8-in. Open-End Wrench	A-A-1356	5120-00-187-7133	4910-95-CL-A31
122	1-5/16-in. Open-End Wrench	ANSI B107.6	5120-00-449-8141	4910-95-CL-A31
123	1-1/16-in. Open-End Wrench	A-A-1356	5120-00-277-2693	4910-95-CL-A31
124	1-7/16-in. Open-End Wrench	A-A-1356	5120-00-277-2322	4910-95-CL-A31
125	1-1/2-in. Open-End Wrench	A-A-1356	5120-00-184-8439	4910-95-CL-A31
126	1-5/8-in. Open-End Wrench	A-A-1356	5120-00-184-8439	4910-95-CL-A3 1

APPENDIX B
COMMON AND SPECIAL TOOLS LIST (Contd)

(1) REFERENCE CODE NUMBER	(2) NOMENCLATURE	(3) PART NUMBER	(4) NATIONAL/NATO STOCK NUMBER	(5) SUPPLY CATALOG
127	1-11/16-in. Open-End Wrench	ANSI B107.6	5120-00-449-8141	4910-95-CL-A31
128	Crimping Tool	M22520/5-01-M225201 5-100	5120-00-596-9313	4910-95-CLA01
129	14-in. Pipe Wrench	GGG-W-651	5120-00-277-1486	4910-95-CL-A31
130	Snapring Pliers	GGG-P-480	5120-00-789-0492	4910-95-A74
131	Bushing Driver Set		5180-00-561-6234	4910-95-CL-A66
132	A-Frame	MILT21080	3950-00-449-7005	4910-95-CL-A66
133	Tape Measure	GGG-T-106TY2 CLBCAVST 3	5210-00-234-6745	4910-95-CL-A31
134	Plumb Bob	MS15747-8	5120-00-238-3299	4910-95-CL-A02
135	1-7/8-in. Socket, 3/4-in. dr.	GGG-W-641	5120-00-199-7769	4910-95-CL-A31
136	Spanner Wrench	GGG-W-665	5120-00-293-0316	—
137	Spreader Bar/Sling	CV15-206287-1	1730-00-546-0915	—
138	Countersink Tool Set	GGG-C-613	5133-00-529-4577	SC 3470-95-A02
139	Bar, Breaker	1818	5120-00-239-0021	4910-95-CL-A31
140	1-1/4-in. Socket, 3/4-in dr.	3105A	5120-00-235-5871	4910-95-CL-A31
141	1/4-in. Hex Head Socket, 3/8-in. dr.	48508	5130-00-596-8508	4940-95-CL-A53
142	Sling	1806	4910-00-944-495	4910-95-CL-A31
143	Oil Priming Pump	A-A-50202 Type II	4930-00-244-4860	4910-95-CL-31
144	Driver, Socket, 3/8-in. dr.	890-5	5310-00-240-5252	4910-95-CL-A53
145	Test Set, Power Steering	7010267	4910-00-627-7043	Special Tool
146	Flowmeter	12375659	—	—
147	Thermometer	MILT1180	6685-00-174-6237	—
148	Bushing Installer	3005319	5120-00-792-1612	—
149	Handle	2010321	5120-00-601-2234	—
150	Top Stop Setting Fixture	3822696	—	5180-00-767-1741
151	Crowsfoot Wrench	ST-1072	4910-00-185-8511	5180-00-767-1741
152	Holding Bracket	3822726	—	5180-00-767-1741
153	Injector Plunger Link	205462	3040-01-200-3010	5180-00-767-1741
154	Injector Adjusting Tool	3375165	4910-01-097-6927	5180-00-767-1741
155	Lifting Straps	3375958	3940-01-187-5870	—
156	Dial Bore Gage	3375072	4910-01-142-4930	—
157	Oil Seal Replacer	7950152	5120-00-795-0152	Special Tool

APPENDIX C
EXPENDABLE/DURABLE SUPPLIES AND MATERIALS LIST

Section I. Introduction (page C-1)
Section II. Expendable/Durable Supplies and Materials List (page C-2)

Section 1. INTRODUCTION

C-1. SCOPE

This appendix lists expendable/durable supplies and materials you will need to maintain M809 series vehicles. This listing is for informational purposes only and is not authority to requisition listed items. These items are authorized to you by CTA 50-970, Expendable/Durable Items (except Medical, Class V, Repair Parts, and Heraldic Items), or CTA 8-100, Army Medical Department Expendable/Durable Items.

C-2. EXPLANATION OF COLUMNS

a. Column (1) - Item Number. This number is assigned to the entry in the listing and is referenced in the "INITIAL SETUP" of applicable tasks under the heading of "MATERIALS/PARTS."

b. **Column** (2) – Level. This column identifies the lowest level of maintenance that requires the listed item.

C – Operator/Crew
O – Unit Maintenance
F – Direct Support Maintenance
H – General Support Maintenance

c. Column (3) - National Stock Number. This is the National stock number assigned to the item; use it to request or requisition the item.

d. Column (4) - Description. This column indicates the Federal item name and, if required, a description to identify the item. The last line for each item indicates the Commercial and Government Entity Code (CAGEC) in parentheses followed by the part number.

e. Column (5) - Unit of Measure (U/M). This column indicates the measure used in performing the actual maintenance function. This measure is expressed by a two-character abbreviation (e.g., EA, GL, OZ). If the unit of measure differs from the unit of issue, requisition the lowest unit of issue that will satisfy your requirements. Adjust when higher category maintenance requirements are involved.

Section II. EXPENDABLE/DURABLE SUPPLIES AND MATERIALS LIST

(1) ITEM NUMBER	(2) LEVEL	(3) NATIONAL STOCK NUMBER	(4) DESCRIPTION	(5) U/M
1	F		ADHESIVE: cyanocrylate plastic (12204) 4057988	
		8040-01-024-6788	3-Gram Tube	DZ
2	F		ADHESIVE: rubber, synthetic (92108) 25011-2	
		8040-00-152-0067	6-Ounce Plastic Cartridge	CA
3	O		ADHESIVE: silicone, non-hardening (94833) 52498	
		8040-00-833-9536	1 Kit	KT
4	O		ANTIFREEZE: permanent, ethylene glycol [-60° F (-51° C)] inhibited (O-A-548) type 1, heavy-duty, (81349) MIL-A-46153	
		6850-00-181-7929	1-Gallon Container	GL
		6850-00-181-7933	5-Gallon Can	GL
		6850-00-181-7940	55-Gallon Drum	GL
5	F		CALIBRATING OIL: gulf 45A (72932) 45A	
		6850-00-974-3738	55-Gallon Drum	GL
6	O		CAP AND PLUG SET: (19207) 10935405	
		5340-00-450-5718	1 Set	SE
7	O		CHALK, MARKING: (81348) SS-C-255	
		7510-00-223-6701	1 Gross	GR
8	O		CLOTH, ABRASIVE (EMERY CLOTH): medium grade, 9-inches wide x 11-inches long (58536) A-A-1049	
		5350-00-584-4653	50-Sheet/Package	PG
9	O		CLOTH, CLEANING: lint-free, general purpose, white (81349) MIL-C-85043	
		7920-00-044-9281	10-Pound Box	LB
10	F		CRAYON, TEMPILSTIK: temperature sensitive, melts at 600°F (316°C) (84032) 600	
		6685-00-945-2367	1 Tube	EA

Section II. EXPENDABLE/DURABLE SUPPLIES AND MATERIALS LIST (Contd)

(1) ITEM NUMBER	(2) LEVEL	(3) NATIONAL STOCK NUMBER	(4) DESCRIPTION	(5) U/M
11	F		CUTTING FLUID: (81349) MIL-F-46148	
		9150-00-265-9406	l-Gallon Can	GL
12	O		DETERGENT: non-sudsing, general purpose, liquid (80244) MIL-D-16791, Type I	
		7930-00-282-9699	l-Gallon	GL
13	C		DIESEL FUEL: DF-1 grade (81349) W-F-800	
		9140-00-419-0450	500-Gallon Drum	GL
14	C		GREASE, AUTOMOTIVE AND ARTILLERY: (81349) MIL-G-10924	
		9150-00-935-1017	14-Ounce Cartridge	OZ
		9150-00-190-0904	1-3/4-Pound Can	LB
		9150-00-190-0905	6-1/2-Pound Can	LB
15	O		GASKET, SEALANT: silicone rubber, general purpose, MIL-A-46106, Type I, Silastic 732 RTV (black) (78500) 1199-T-3842	
		8040-00-728-3088	5-Ounce Tube	OZ
16	H		INSULATION: felt, thermal, fiberglass, MIL-I-22023 (39428) 9346N2	
		5640-00-127-4929	1200-Inch Roll	EA
17	O		INSULATION VARNISH: color, transparent blue, (72799) Glyptal 7526F	
		8040-00-530-4820	1-Pint Can	PT
18	H		LAPPING AND GRINDING COMPOUND: valve - grinding compound, grease – mixed, grit 120 coarse (58536) A-A-1203, Type I	
		5350-00-271-5966	1-Pound Can	LB
19	H		LAPPING AND GRINDING COMPOUND: valve – grinding compound, grease - mixed, grit 220 medium (58536) A-A-1203, Type I	
		5350-00-193-1341	1-Pound Can	LB

Section II. EXPENDABLE/DURABLE SUPPLIES AND MATERIALS LIST (Contd)

(1) ITEM NUMBER	(2) LEVEL	(3) NATIONAL STOCK NUMBER	(4) DESCRIPTION	(5) U/M
20	C		LUBRICATING OIL, ENGINE: OE/HDO 10 (81349) MIL-L-2104	
		9150-00-189-6727	1-Quart Can	QT
		9150-00-186-6668	5-Gallon Drum	GL
		9150-00-188-9862	55-Gallon Drum	GL
		9150-00-191-2772	55-Gallon Drum	GL
		9150-00-183-7807	Bulk	BK
21	C		LUBRICATING OIL, ENGINE: OE/HDO 30 (81349) MIL-L-2104	
		9150-00-186-6681	1-Quart Can	QT
		9150-00-188-9858	5-Gallon Drum	GL
		9150-00-189-6729	55-Gallon Drum	GL
		9150-00-183-7808	55-Gallon Drum	GL
22	C		LUBRICATING OIL, GEAR: GO 80/90 (81349) MIL-L-2105	
		9150-01-035-5392	1-Quart Can	QT
		9150-01-035-5393	5-Gallon Drum	GL
		9150-01-035-5394	55-Gallon Drum	GL
23	C		MINERAL OIL: gear lubricating SAE 250 viscosity (81349) MIL-L-6086	
		9150-00-223-4116	5-Gallon Can	GL
		9150-00-223-4130	6-Gallon Can	GL
24	O		NUT: non-locking (96906) MS35690-1027	
		5310-00-010-3030	Each	EA
25	O		NUT: non-locking (96906) MS35690-824	
		5310-00-010-3028	Each	EA
26	F		PIGMENT: iron, blue, oil base (substitute for prussian blue) (81348) TT-P-381	
		8010-00-247-4334	1/2-Pint Can	PT

Section II. EXPENDABLE/DURABLE SUPPLIES AND MATERIALS LIST (Contd)

(1) ITEM NUMBER	(2) LEVEL	(3) NATIONAL STOCK NUMBER	(4) DESCRIPTION	(5) U/M
27	O		PIGMENT: lead carbonate paste in oil (96906) MS35599-1	
		8010-00-239-5736	1-Pound Can	LB
28	O		PLASTIC STRAP, TIEDOWN: self-locking, Type I, Class 1, 5-inches long (96906) MS3367-5-9	
		5975-00-111-3208	1 Hundred	HD
29	O		PLASTIC STRAP, TIEDOWN ELECTRICAL COMPONENTS: self-locking, Type I, Class I, 10-inches long (96906) MS3367-7-9	
		5975-00-570-9598	1 Hundred	HD
30	F		PLASTIGAGE: clearance, range green, 10 to 12-inches long (77220) PG-1	
		5210-00-640-6177	250-Each Box	BX
31	F		PRIMER: zinc chromate, color green (81348) Spec TT-P-1757	
		0010-00-145-0312	1 Can	PT
32	C		RAG, WIPING: unbleached cotton and cotton-synthetic, mixed colors (58536) A-A-531	
		7920-00-205-1711	50-Pound Bale	LB
33	O		SCREW: (96906) MS90726-172	
		5305-00-724-5938	Each	EA
34	O		SCREW: (96906) MS90727-127	
		5305-00-269-8956	Each	EA
35	O		SCREW (29510) 188978	
		5305-01-184-3514	Each	EA
36	O		SCREW: (96906) MS90728-66	
		5305-00-782-9489	Each	EA

Section II. EXPENDABLE/DURABLE SUPPLIES AND MATERIALS LIST (Contd)

(1) ITEM NUMBER	(2) LEVEL	(3) NATIONAL STOCK NUMBER	(4) DESCRIPTION	(5) U/M
37	O		SCREW (96906) MS90728-76	
		5305-00-857-6886	Each	EA
38	O		SCREW: (96906) MS90728-78	
		5305-00-964-0503	Each	EA
39	O		SCREW: (96906) MS90728-58	
		5305-00-543-4372	Each	EA
40	O		SCREW: (96906) MS90728-93	
		5305-00-071-2059	Each	EA
41	O		SCREW: (96906) MS90728-119	
		5305-00-071-2075	Each	EA
42	O		SEALING COMPOUND: anaerobic, retaining, MIL-R-46082, TypeII, Loctite RC/640 (05972)64031	
		8030-00-111-6404	50-Milliliter Bottle	ML
43	O		SEALING COMPOUND: hardening, MIL-S-45180, Type I, Permatex No. 1 (77247) FORMAGASKET 1	
		8030-00-247-2525	11-Ounce Tube	OZ
44	O		SEALING COMPOUND: non-hardening, MIL-S-45180, Type II, Permatex No. 2 (77247) FORMAGASKET 2	
		8030-00-252-3391	1 l-Ounce Tube	OZ
45	O		SEALING COMPOUND: rubber synthetic kit has enough base, curing agent, and primer to make one gallon (81349) MIL-C-18255	
		8030-00-682-6745	l-Gallon Kit	KT
46	C		SOAP, BAR: white, non-floating type (58536) AA-49	
		8520-00-551-0376	500 Cakes Per Box	BX
47	F		SOLDER, TIN ALLOY: rosin core (81348) SN6WRAP3 0.094 5LB	
		3439-00-224-3567	5-Pound	LB

Section II. EXPENDABLE/DURABLE SUPPLIES AND MATERIALS LIST (Contd)

(1) ITEM NUMBER	(2) LEVEL	(3) NATIONAL STOCK NUMBER	(4) DESCRIPTION	(5) U/M
48	C		SOLVENT, DRYCLEANING: Type 11 (81348) P-D-680	
		6850-00-110-4498	1-Pint Can	PT
		6850-00-281-1985	1-Gallon Drum	GL
		6850-00-274-5421	5-Gallon Drum	GL
		6850-00-285-8012	55-Gallon Drum	GL
		6850-00-637-6135	Bulk	GL
49	F		SPLICE KIT: electrical wire (06090) D-436-37	
		5940-00-271-7741	1 Package	PG
50	O		TAPE, ANTISEIZE: white, MIL-T-27730, 1/2-inch wide x 260-inch long x 0.0035-inch thick, snap-on shell (81755) P5025-2R	
		8030-00-889-3535	Each	EA
51	O		TAPE, INSULATING, ELECTRICAL: (75037) 173-41NBLACK	
		5970-00-419-4291	108-Foot Roll	RL
52	O		TAPE, MASKING: (85480) Size-2	
		7510-01-222-4532	Each	EA
53	F		TOWEL, CROCUS CLOTH: abrasive (crocus), 9-inch x n-inch sheets (58536) A-A-1206, Type I	
		5350-00-221-0872	50-Sheets/Package	PG
54	O		TWINE: (96599) 4PLY40Z12	
		4020-00-446-1053	60-Yard Roll	YD
55	O		UNDERCOATING COMPOUND: asphalt, petroleum (81348) TT-C-520	
		8030-00-221-1833	55-Gallon Drum	GL
56	O		WASHER: flat (96906) MS15795-825	
		5310-00-902-6659	Each	EA
57	O		WASHER: flat (96906) MS15795-841	
		5310-00-225-5328	Each	EA

Section II. EXPENDABLE/DURABLE SUPPLIES AND MATERIALS LIST (Contd)

(1) ITEM NUMBER	(2] LEVEL	(3) NATIONAL STOCK NUMBER	(4) DESCRIPTION	(5) U/M
58	O		WASHER: flat (96906) MS15795-816	
		5310-00-184-8628	Each	EA
59	O		WIRE, NON-ELECTRICAL (96906) MS20995NC40	
		9525-00-990-7799	1-Pound	LB

APPENDIX D
MANDATORY REPLACEMENT PARTS

Section I. Introduction (page D-1)
Section II. Mandatory Replacement Parts (page D-2)

Section 1. INTRODUCTION

D-1. SCOPE

This appendix lists mandatory replacement parts you will need to maintain M809 series vehicles.

D-2. EXPLANATION OF COLUMNS

a. Column (1) - Item Number. This number is assigned to the entry in the listing and is referenced in the “INITIAL SETUP” of applicable tasks under the heading of "MATERIALS/PARTS.”

b. Column (2) - Nomenclature. Name or identification of the part.

c. Column (3) - Part Number. The manufacturer’s part number.

d. Column (4) - National Stack Number. The national stock number of the part.

Section II. MANDATORY REPLACEMENT PARTS

(1) ITEM NUMBER	(2) NOMENCLATURE	(3) PART NUMBER	(4) NATIONAL (NATO) STOCK NUMBER
1	Ball Socket Seat	194037	2815-00-404-2940
2	Bearing	MS51961-32	3110-00-227-3255
3	Bearing, Ball	213769	3110-01-079-8190
4	Bearing, Sleeve	10876159	3120-00-826-5630
5	Bearing, Sleeve	7409807	3120-00-740-9807
6	Brake Lining	12356757	2530-01-281-5221
7	Bushing	10-40897A	3120-01-140-5727
8	Bushing	7346812	5365-00-427-2282
9	Bushing	187420	5365-00-132-0273
10	Bushing	713421	3110-00-183-6723
11	Bushing	7373115	3120-00-737-3115
12	Bypass Seat	153526	2815-00-131-1700
13	Check Valve	11621192	4820-00-808-7461
14	Control Valve Parts Kit	5704273	4820-01-093-5785
15	Control Valve Parts Kit	5704274	2590-00-606-2383
16	Cotter Pin	EWB7633-06-17	5315-00-849-9854
17	Cotter Pin	MS24665-5	5315-00-236-8345
18	Cotter Pin	MS24665-495	5315-00-234-1664
19	Cotter Pin	MS24665-497	5315-00-013-7258
20	Cotter Pin	MS24655423	5315-00-013-7228
21	Cotter Pin	MS24665-353	5315-00-839-5822
22	Cotter Pin	MS24665-357	5315-00-298-1481
23	Cotter Pin	MS24665-360	5315-00-789-1499
24	Cotter Pin	MS24665-625	5315-00-209-7273
25	Cotter Pin	MS24665-361	5315-00-059-0184
26	Cotter Pin	MS24665-430	5315-00-500-1267
27	Cotter Pin	MS24665-363	5315-00-059-0187
28	Cotter Pin	MS24665-655	5315-00-187-9414
29	Cotter Pin	S510	5315-00-238-7631
30	Cotter Pin	08-202008	5315-01-080-9051
31	Cotter Pin	MS9245-65	5315-00-926-5767
32	Cotter Pin	MS9245-95	5315-01-127-7201
33	Cotter Pin	G-6365	5315-01-135-9402
34	Cotter Pin	MS24665-647	5315-01-253-5867
35	Cotter Pin	G-6107	5315-01-122-4602
36	Cotter Pin	MS24665-362	5315-00-298-1498
37	Cotter Pin	MS24665-351	5315-00-839-5821
38	Cotter Pin	MS24665-502	5315-00-849-5582
39	Cotter Pin	MS24665421	5315-00-849-9857
40	Cotter Pin	MS24665-132	5315-00-839-2325

Section II. MANDATORY REPLACEMENT PARTS (Contd)

(1) ITEM NUMBER	(2) NOMENCLATURE	(3) PART NUMBER	(4) NATIONAL (NATO) STOCK NUMBER
41	Cotter Pin	MS24665-140	5315-00-252-5986
42	Cotter Pin	MS24665-355	5315-00-012-0123
43	Cotter Pin	MS24665-285	5315-01-061-2060
44	Cotter Pin	MS24665-359	5315-00-013-7214
45	Cotter Pin	MS25665-498	5315-00-849-9854
46	Cotter Pin	MS24665-628	5315-00-846-0126
47	Cotter Pin	MS24665-627	5315-00-013-7308
48	Cotter Pin	MS24665-283	5315-00-842-3044
49	Cotter Pin	G-6055	5315-01-206-5207
50	Cotter Pin	MS24665-281	5315-00-839-2326
51	Cup, Compression	7490683	5340-00-740-9683
52	Cushion Pad	7084738	2590-00-471-5343
53	Cushion Pad	8380498	2590-00-471-5344
54	Disk	200819	4820-00-400-5189
55	Disk	202897	5340-00-951-3536
56	Filler, Channel Lift	10906350	2510-00-179-5708
57	Filter Element	146483	2910-00-790-8736
58	Gasket	214634	5330-01-126-8667
58.1	Gasket	43085	—
59	Gasket	8332603	5330-00-692-6144
59.1	Gasket	68210	5330-00-328-8656
60	Gasket	7409791	5330-00-740-9791
60.1	Gasket	3008017	5330-01-079-6514
61	Gasket	P6855	5330-00-531-2821
62	Gasket	7409082	5330-00-242-5587
63	Gasket	110453	5330-00-143-8371
64	Gasket	7409081	5330-00-740-9081
65	Gasket	67963	5330-00-171-7267
66	Gasket	6210696	5330-00-350-5248
67	Gasket	157551	5330-00-143-8376
68	Gasket	7414252	5330-00-741-4252
69	Gasket	134285	5330-00-465-5818
70	Gasket	10900105	5330-00-232-6124
71	Gasket	151911	5330-00-961-6314
72	Gasket	10932109	5330-00-911-5621
73	Gasket	151623	5330-01-082-1906
74	Gasket	7414251	5330-00-741-4251
75	Gasket	9333-1	5330-00-729-4427
76	Gasket	11663365	5330-01-054-4011
77	Gasket	3021735	5330-01-082-6985

Section II. MANDATORY REPLACEMENT PARTS (Contd)

(1) ITEM NUMBER	(2) NOMENCLATURE	(3) PART NUMBER	(4) NATIONAL (NATO) STOCK NUMBER
78	Gasket	11592566	5330-00-414-6695
79	Gasket	9266A	5330-00-349-1219
80	Gasket	475067	5330-00-752-0358
81	Gasket	9266	5330-00-175-6585
82	Gasket	702903	5330-00-089-0978
83	Gasket	3011272	5330-01-266-1047
84	Gasket	10899995	5330-00-182-3489
85	Gasket	120819	5330-00-777-3545
86	Gasket	10899988	5330-00-419-5874
87	Gasket	3011273	5330-01-267-6189
88	Gasket	10900100	5330-00-545-1324
89	Gasket	3047402	5330-01-080-5021
90	Gasket	10900090	5330-00-064-3691
91	Gasket	3017750	5330-00-861-8592
92	Gasket	10876131	5330-00-522-1174
93	Gasket	7409100	5330-00-740-9100
94	Gasket	7409089	5330-00-740-9089
95	Gasket	7409822	5330-00-057-3823
96	Gasket	7409821	5330-00-740-9821
97	Gasket	7973339	5330-00-895-3424
98	Gasket	7409933	5330-00-740-9933
99	Gasket	7409931	5330-00-166-4333
100	Gasket	7409932	5330-00-740-9932
101	Gasket	11664537	5330-00-419-5873
102	Gasket	10876130	5330-00-826-5204
103	Gasket	B90429	5330-01-066-3908
104	Gasket	8380431	5330-00-415-1488
105	Gasket	3008591	5330-01-086-3523
106	Gasket	703349	5330-00-997-1528
107	Gasket	3031434	5330-01-147-4071
108	Gasket	5323606	5330-00-532-3606
109	Gasket	200809	5330-00-026-2931
110	Gasket	7061270	5330-00-706-1270
111	Gasket	3032861	5330-01-147-0748
112	Gasket	10876133	5330-00-826-5502
113	Gasket	142234	5330-00-659-3178
114	Gasket	10876132	5330-00-826-5203
115	Gasket	70089-1	5330-00-537-2382
116	Gasket	11621135	5330-00-808-7417
117	Gasket	173086	5330-00-132-0247

Section II. MANDATORY REPLACEMENT PARTS (Contd)

(1) ITEM NUMBER	(2) NOMENCLATURE	(3) PART NUMBER	(4) NATIONAL (NATO] STOCK NUMBER
118	Gasket	8327118	5330-00-832-7118
119	Gasket	3035053	5330-00-160-7460
120	Gasket	6156756	5330-00-615-6256
121	Gasket	210647	5330-00-006-2494
122	Gasket	8333103	5330-01-181-0829
123	Gasket	70705	5330-00-562-1176
124	Gasket	TS33-016	5330-00-951-3538
125	Gasket	100764	5330-00-506-4866
126	Gasket	MA128-21097	5330-01-099-9422
127	Gasket	130240	5330-00-106-6369
128	Gasket	130226	5330-00-106-6370
129	Gasket	8327103	5330-00-832-7103
130	Gasket	7520957	5330-00-752-0976
131	Gasket	8333624	5330-00-532-9061
132	Gasket	3024709	5330-01-145-5381
133	Gasket	7376172	5330-00-040-2253
134	Gasket	8327322	5330-00-234-3317
135	Gasket	7347592	5330-01-097-8248
136	Gasket	7347591	5330-00-734-7591
137	Gasket	7347593	5330-00-457-3453
138	Gasket	7347590	5330-00-734-7590
139	Gasket	7376584	5330-00-737-6584
140	Gasket	10913209	5365-00-832-7774
141	Gasket	7375291	5330-01-206-2195
142	Gasket	7375293	5330-00-563-5524
143	Gasket	7375292	5330-00-563-5523
144	Gasket	7375246	5330-00-040-2234
145	Gasket	7375294	5330-01-231-9265
146	Gasket	5214539	5310-00-275-6635
147	Gasket	5160323	5310-00-209-1761
148	Gasket	7346886	5330-00-734-6886
149	Gasket	7346896	5330-01-077-8512
150	Gasket	10900396	5330-00-419-5872
151	Gasket	65274	5330-00-246-0309
152	Gasket	190397	2930-00-401-9531
153	Gasket	3012972	5330-01-131-2967
154	Gasket	11664454	5330-00-143-7371
155	Gasket	8333623	5330-00-318-4310
156	Gasket	7061270	5330-00-706-1270
157	Grease Fitting	MS15003-1	4730-00-050-4208

Section II. MANDATORY REPLACEMENT PARTS (Contd)

(1) ITEM NUMBER	(2) NOMENCLATURE	(3) PART NUMBER	(4) NATIONAL (NATO) STOCK NUMBER
157.1	Grommet	10906728	5325-00-419-0507
158	Igniter	G484055	4520-00-312-2017
159	Igniter	CS-4520-SV-0705	4520-00-217-5782
160	Injector Sleeve	3011934	2910-01-146-0048
161	Insulator	7411068	5340-00-741-1068
162	Insulator	MS27183-12	5310-00-081-4219
163	Keeper	127554	5340-01-143-6048
164	Locking Plate	114638	5310-00-887-8325
165	Locking Plate	5215996	5340-01-185-4950
166	Locking Plate	109319	2815-00-406-8936
167	Locknut	MS51922-21	5310-00-959-1488
168	Locknut	MS51943-50	5310-00-340-4953
169	Locknut	MS21044N4	5310-00-877-5796
170	Locknut	MS21045-8	5310-00-062-4954
171	Locknut	MS21045-6	5310-00-982-4908
172	Locknut	MS21045-12	5310-00-982-5012
173	Locknut	MS21045-14	5310-00-982-5014
174	Locknut	MS5194344	5310-00-241-6664
175	Locknut	MS21044N7	5310-00-088-0552
176	Locknut	MS51943-36	5310-00-814-0672
177	Locknut	MS51922-17	5310-00-087-4652
178	Locknut	MS21083-C12	5310-00-923-4219
179	Locknut	7409369	5310-00-740-9369
180	Locknut	MS21245-L8	5310-00-449-2378
181	Locknut	10938317	5310-00-472-1963
182	Locknut	MS21045-4	5310-00-061-7325
183	Locknut	MS51943-16	5310-00-235-1078
184	Locknut	MS21045-10	5310-00-982-5009
185	Locknut	MS51943-46	5310-00-935-3569
186	Locknut	10871252	5310-00-143-6456
187	Locknut	NAS1021-N17	5310-00-325-1900
188	Locknut	3012526	5310-01-126-1045
189	Locknut	MS51922-37	5310-00-067-9507
190	Locknut	MS21045-5	5310-00-982-4912
191	Locknut	MS51922-5	5310-00-959-7600
192	Locknut	MS21044N8	5310-00-877-5795
193	Locknut	MS51922-53	5310-00-225-6408
194	Locknut	MSS1922-1	5310-00-088-1251
196	Locknut	MS21045-3	5310-00-96S-1820
196	Locknut	MSS1922-33	S310-00-225-6993

Section II. MANDATORY REPLACEMENT PARTS (Contd)

(1) ITEM NUMBER	(2) NOMENCLATURE	(3) PART NUMBER	(4) NATIONAL (NATO) STOCK NUMBER
197	Locknut	MS21045-06	5310-00-889-2544
198	Locknut	MS21045-08	8310-00-889-2549
199	Locknut	MS51943-34	5310-00-241-6658
200	Locknut	MS51943-40	5310-00-488-3888
201	Locknut	MS51922-18	5310-00-914-6028
202	Locknut	MS21045-20	5310-00-982-4998
203	Locknut	G-9185	5310-01-122-4492
204	Locknut	MS51968-8	5310-00-732-0559
205	Locknut	HCF19362	5306-01-045-3832
205.1	Locknut	5255774	5310-01-203-6375
206	Locktab	3009213	5310-00-356-1447
207	Locktab	8758258	5330-00-147-3274
208	Locktab Washer	8327018	2520-00-832-7018
209	Lockwasher	705237	5310-01-063-8522
210	Lockwasher	4E16	5310-01-203-0112
211	Lockwasher	4E10	5310-01-105-9397
212	Lockwasher	475005	5310-00-061-0004
213	Lockwasher	MS35338-111	5310-01-217-4645
214	Lockwasher	MS45904-57	5310-00-061-0004
215	Lockwasher	MS35338-46	5310-00-637-9541
216	Lockwasher	MS35338-40	5310-00-543-2410
217	Lockwasher	MS35338-47	5310-00-209-0965
218	Lockwasher	MS35338-51	5310-00-584-7888
219	Lockwasher	MS35338-50	5310-00-820-6653
220	Lockwasher	25E25	5310-01-219-4032
221	Lockwasher	25E26	5310-01-203-0111
222	Lockwasher	25E18	5310-01-203-0120
223	Lockwasher	MS35338-48	5310-00-584-5272
224	Lockwasher	MS35338-44	5310-00-582-5965
225	Lockwasher	MS122032	5310-00-159-6209
226	Lockwasher	G-9125	5310-01-122-6109
227	Lockwasher	MS35338-43	5310-00-045-3296
228	Lockwasher	G-39500	5310-01-122-6152
229	Lockwasher	MS35338-27	5310-00-543-2705
230	Lockwasher	G-74004	5310-01-122-7677
231	Lockwasher	MS122033	5310-00-285-7040
232	Lockwasher	G-39203	5310-01-122-6151
233	Lockwasher	181466	5310-00-484-1718
234	Lockwasher	G39350	5310-01-122-6153
235	Lockwasher	MS35333-40	5310-00-550-1130

Section II. MANDATORY REPLACEMENT PARTS (Contd)

(1) ITEM NUMBER	(2) NOMENCLATURE	(3) PART NUMBER	(4) NATIONAL (NATO) STOCK NUMBER
236	Lockwasher	G-39250	5310-01-122-6148
237	Lockwasher	MS35335-39	5310-00-800-0695
238	Lockwasher	G-39200	5310-01-122-6149
239	Lockwasher	MS3533344	5310-00-194-1483
240	Lockwasher	G-39300	5310-01-122-6150
241	Lockwasher	MS35340-52	5310-00-926-5884
242	Lockwasher	MS35338-046	5310-00-004-5033
243	Lockwasher	MS35335-38	5310-00-616-6354
244	Lockwasher	MS35333-38	5310-00-559-0070
245	Lockwasher	MS35338-52	5310-00-754-2005
246	Lockwasher	MS35335-30	5310-00-209-0788
247	Lockwasher	MS35338-45	5310-00-407-9566
248	Lockwasher	MS45904-68	5310-00-889-2528
249	Lockwasher	MS35333-56	5310-00-013-8534
250	Lockwasher	MS45904-72	5310-00-889-2527
251	Lockwasher	MS35335-19	5310-00-209-0786
252	Lockwasher	MS35335-35	5310-00-627-6128
253	Lockwasher	MS35338-42	5310-00-045-3299
254	Lockwasher	MS35340-43	5310-00-721-7809
255	Lockwasher	MS45904-76	5310-00-061-1258
256	Lockwasher	MS45904-77	5310-00-953-8628
257	Lockwasher	MS27183-14	5310-00-080-6004
258	Lockwasher	MS21333-67	5340-00-079-7837
259	Lockwasher	MS35338-4	5310-00-010-6496
260	Lockwasher	MS35335-33	5310-00-209-0786
261	Lockwasher	MS35338-5	5310-00-045-3296
262	Nut-Assembled Lockwasher	488756	5310-00-606-8281
263	Nut-Assembled Lockwasher	511-061800-00	5310-00-063-7360
264	Nut-Assembled Lockwasher	706131	5310-01-287-6543
265	Nut-Assembled Lockwasher	487283	5310-00-333-7341
266	Nylon Washer	160514	5365-00-965-0870
267	O-ring	G-63707	5330-01-122-4613
268	O-ring	7409761	5330-00-740-9761
269	O-ring	7409762	5330-00-740-9762
270	O-ring	131026	5330-00-143-8485
271	O-ring	8327984	5330-00-291-2439
272	O-ring	A788X5	5330-01-219-3998
273	O-ring	A395X23	5330-00-588-1140
274	O-ring	137075	5330-00-005-0858
275	O-ring	G-61513	5330-01-122-4612

Section II. MANDATORY REPLACEMENT PARTS (Contd)

(1) ITEM NUMBER	(2) NOMENCLATURE	(3) PART NUMBER	(4) NATIONAL (NATO) STOCK NUMBER
276	O-ring	154087	5330-00-951-3538
277	O-ring	10-41321A	2590-01-125-9770
278	O-ring	100099	5330-00-809-2667
279	O-ring	10-9115A	5365-01-122-6136
280	O-ring	139988	5330-00-809-3276
281	O-ring	G-63533	5330-01-143-6322
282	O-ring	730051-1	5330-01-129-0361
283	O-ring	718768-23	5330-00-089-0998
284	O-ring	1JHV350REVCPC	5330-00-514-4804
285	O-ring	501461	5330-00-292-0570
286	O-ring	3010954	5330-01-161-0289
287	O-ring	10-41045A	2590-01-126-0093
288	O-ring	154086	5365-00-457-4401
289	O-ring	10-12295A	5365-01-123-7063
290	O-ring	100478	5330-00-081-9289
291	O-ring	G-63517	5330-01-122-0492
292	O-ring	213768	5330-01-072-8983
293	O-ring	MS28775-113	5330-00-582-2855
294	O-ring	68061-A	5330-00-970-3461
295	O-ring	MS28782-19	5330-00-171-6749
296	O-ring	MS28775-217	5330-00-579-7914
297	O-ring	MS35803-214	5330-00-993-1014
298	O-ring	3019116	5330-01-160-7458
299	O-ring	852826	—
300	O-ring	3007759	5330-01-072-4436
301	Packing	MS28775-243	5330-01-185-4680
302	Packing	11609215	5330-00-269-4953
303	Packing	67270	5330-00-171-3879
304	Packing	MS28778-6	5330-00-004-5695
305	Packing	172648	5330-00-404-2920
306	Packing	032200-17	5330-00-733-9765
307	Packing	3046201	5330-01-072-8984
308	Packing	MS28775-222	5330-00-297-9990
309	Packing	70624	5330-00-506-4874
310	Packing	10900300	5330-00-523-4235
311	Packing	128086	5330-00-026-2931
312	Packing	MS28775-249	5330-01-019-2448
313	Packing	127936	5330-00-441-0145
314	Packing	A788X5	5330-01-219-3998
315	Pin	MS35671-51	5315-01-136-8374

Section II. MANDATORY REPLACEMENT PARTS (Contd)

(1) ITEM NUMBER	(2) NOMENCLATURE	(3) PART NUMBER	(4) NATIONAL (NATO) STOCK NUMBER
316	Pin	70550	2815-01-124-0232
317	Pin	7414257	5315-00-741-4257
318	Pin	10-41247	5315-01-126-9484
319	Piston Ring	10876153	4720-00-504-8923
320	Piston Ring	8327985	4310-00-287-8126
321	Plug	3044992	
322	Plug	175831	5340-00-485-0945
323	Plug	MS35648-6	5340-00-232-5723
324	Plug	MS35648-8	5340-00-050-1600
325	Plug	213395	5340-01-087-0681
326	Plug	216524	5340-01-086-6193
327	Plug	213394	5340-01-087-0682
328	Plug	7520976	5340-00-752-0976
329	Plug	MS90726-109	5305-00-226-7767
330	Plug, Expansion	7417932	5340-00-741-7932
331	Plug, Expansion	MS35648-3	5340-00-050-1589
332	Plug, Expansion	7409684	5340-00-740-9684
333	Repair Kit, Bevel Pinion Gear and Spacer	5704278	2520-00-421-7229
334	Repair Kit, Brake Lining	5704496	2530-00-152-2465
335	Repair Kit, Filter	AR51436	2910-00-497-1925
336	Repair Kit, Injector Overhaul	AR51522	2910-01-117-3689
337	Repair Kit, Wear Sleeve	5705699	4910-01-313-4621
338	Retainer	7376534	5330-00-151-6534
339	Retaining Ring	MS16625-1100	5365-00-807-2636
340	Retaining Ring	MS16627-1093	5365-00-846-1637
341	Retaining Ring	3001704	5365-00-558-9412
342	Retaining Ring	174299	5365-00-815-1137
343	Retaining Ring	110827	5330-00-785-7894
344	Ring, Back-up	032249	5330-00-798-4635
345	Ring, Wiper	7409865	2590-00-740-9865
346	Rivet	MS20600AD6W4	5320-00-582-3276
347	Rivet	MS20600MP8W4	5320-01-068-2340
348	Rivet	MS20600AD8W8	5320-00-061-9653
349	Rivet	MS24661-224	—
350	Rivet	MS24661-226	5320-00-231-3663
351	Rivet	MS24662-234	5320-00-930-7865
352	Rivet	RV200-6-3	5320-00-582-3268
353	Rivet	MS20600-AD6-2	—
354	Rivet	MS20600-AD6-3	5320-00-286-4789
355	Rivet	MS20600-AD6-42	—

Section II. MANDATORY REPLACEMENT PARTS (Contd)

(1) ITEM NUMBER	(2) NOMENCLATURE	(3) PART NUMBER	(4) NATIONAL (NATO) STOCK NUMBER
356	Rivet	MS20600-AD5W2	5320-00-582-3302
357	Rivet	MS51861-45	5305-00-432-4201
358	Rivet	MS20470A6-6	5320-00-242-1580
359	Rivet	10640792-1	5320-00-956-7355
360	Rivet	10924933	5320-00-956-7355
361	Rivet	MS20470A6-9	5320-00-264-3266
362	Rivet	MS20470A5-8	5320-00-234-8557
363	Rivet	RV200-6-2	5320-00-584-1285
364	Rivet	MS2425311-A602	—
365	Rivet	RV201-6-4	5320-00-582-3276
366	Rivet	189513	5320-61-223-1094
367	Rivet	10896748	5320-00-443-5065
368	Rubber Bumper	7535643	5340-00-766-3330
369	Rubber Bumper	7035447	5340-00-264-7182
370	Rubber Bushing	S1003A	5365-00-598-5255
371	Rubber Strip	7005421	5330-00-700-5421
372	Safety Wire	MS20995F91-8	9505-00-248-9842
373	Safety Wire	MS20995N51	9525-00-618-5462
374	Safety Wire	MS20995-F91	9505-00-846-0941
375	Safety Wire	MS20995F41	9505-00-684-4843
376	Safety Wire	MS20995F47	—
376.1	Safety Wire	LWI	9505-00-596-1658
377	Screen	3008706	2910-01-077-2016
378	Screw	S2286	5305-00-804-6318
379	Screw-assembled Lockwasher	3012480	5305-01-227-6249
380	Screw-assembled Lockwasher	487357	5305-00-576-2335
381	Screw-assembled Lockwasher	3010596	5305-01-088-6019
382	Screw-assembled Lockwasher	187527	5306-00-018-7527
383	Screw-assembled Lockwasher	70772	5305-00-477-6769
384	Screw-assembled Lockwasher	18672	5305-00-794-1104
385	Screw-assembled Lockwasher	594119	5305-00-317-3102
386	Screw-assembled Lockwasher	423531	5305-00-403-5130
387	Screw-assembled Lockwasher	431938	5306-00-043-1938
388	Screw-assembled Lockwasher	422398	—
389	Screw-assembled Lockwasher	7748663	5305-00-145-1069
390	Screw-assembled Lockwasher	422397	—
391	Screw-assembled Lockwasher	3010593	5305-01-197-3449
392	Screw-assembled Lockwasher	423315	—
393	Screw-assembled Lockwasher	105574	5305-00-463-0429
394	Screw-assembled Lockwasher	422399	—

Section II. MANDATORY REPLACEMENT PARTS (Contd)

(1) ITEM NUMBER	(2) NOMENCLATURE	(3) PART NUMBER	(4) NATIONAL (NATO) STOCK NUMBER
395	Screw-assembled Lockwasher	3008069	5305-01-212-5210
396	Screw-assembled Lockwasher	423312	—
397	Screw-assembled Lockwasher	3012473	5305-01-137-6706
398	Screw-assembled Lockwasher	9422675	
399	Screw-assembled Lockwasher	3010590	5305-01-119-8621
400	Screw-assembled Lockwasher	422310	5305-00-042-2310
401	Screw-assembled Lockwasher	3010589	5305-01-129-6901
402	Screw-assembled Lockwasher	170677	5305-01-237-1601
403	Screw-assembled Lockwasher	488588	—
404	Screw-assembled Lockwasher	420993	5305-00-042-0993
405	Screw-assembled Lockwasher	719675	5305-00-403-5130
406	Screw-assembled Lockwasher	3013904	5305-01-112-9021
407	Seal	211255	5330-00-135-6382
408	Seal	25K60120	5330-00-194-3705
409	Seal	113586R91	—
410	Seal	7409765	5330-00-740-9765
411	Seal	3003156	5310-00-072-8830
412	Seal	7409763	5330-00-740-9763
413	Seal	7409764	5330-00-740-9764
414	Seal	10-30326A	5330-01-122-5392
415	Seal	10938432-1	—
416	Seal	208069	5330-00-006-2529
417	Seal	10-41320A	5330-01-122-5636
418	Seal	3006737	5330-00-005-0858
419	Seal	10-31103A	5330-01-122-5637
420	Seal	450120	5330-01-046-7449
421	Seal	10-41311A	5330-01-122-4609
422	Seal	691-10014	5330-00-252-8888
423	Seal	11640313	5330-01-126-3469
424	Seal	106943	5310-00-506-4869
425	Seal	7418774	5330-00-866-6236
426	Seal	154088	5330-00-961-9470
427	Seal	17657/55-542465	5330-01-150-9691
428	Seal	83304012	5330-00-612-1188
429	Seal	10875107-7	5330-01-119-5801
430	Seal	11669023	5330-01-023-0269
431	Seal	7409940	5330-00-292-1600
432	Seal	8758294	5330-00-832-8235
433	Seal	12300661	5330-01-131-5416
434	Seal	500207	5330-00-585-3210

Section II. MANDATORY REPLACEMENT PARTS (Contd)

(1) ITEM NUMBER	(2) NOMENCLATURE	(3) PART NUMBER	(4) NATIONAL (NATO) STOCK NUMBER
435	Seal	032205	5330-00-733-9766
436	Seal	032460	5330-01-143-6486
437	Seal	500097	5330-00-286-8150
438	Seal	7414275	5330-00-741-4275
439	Seal	8333868	5330-00-091-9767
440	Seal	MS51000-116-2	5330-01-157-5676
440.1	Seal	106276	5330-00-406-9388
441	Seal	8735034	5330-00-419-9468
442	Seal	8735036	5330-00-419-9469
443	Seal	8735035	5330-00-470-2115
444	Seal	11607302	5330-00-340-3637
445	Seal	8380420	9320-00-451-8080
446	Seal	7534653	4610-00-020-5375
447	Seal	8380424	2510-01-147-1517
448	Seal	10937627-1	5330-01-106-2067
449	Seal	11607267-2	9320-00-421-7230
450	Seal	10937640	5330-00-338-0774
451	Seal	8327116	5330-00-599-4968
452	Seal	10937683-2	9390-00-158-2408
453	Seal	10915159	9390-00-405-0215
454	Seal	7373291-3	5330-00-152-3217
455	Seal	10937683-3	5330-01-221-9183
456	Seal	10937691	5330-01-098-6555
457	Seal	10937727	5330-01-164-1245
458	Seal	SULLA 1437	5330-00-847-2119
459	Seal	11607296-1	5330-00-391-8318
460	Seal	11665765	5330-01-219-7859
461	Seal	11665766-2	5330-01-217-2205
462	Seal	03868AB	5330-00-285-1346
463	Seal	2012993-4	5330-00-972-2635
464	Seal	MS51000-131-2	5330-01-254-6377
465	Seal	7061272	5330-01-143-1211
466	Seal	7061271	5330-00-559-8733
467	Seal	11640317	5330-00-404-3210
468	Seal	500163	5330-00-178-2191
469	Seal	MS29513-012	5330-00-248-3836
470	Seal	MS51911-35-3	5330-00-919-8882
471	Seal	7375282	5330-00-737-5282
472	Seal	10938287	5330-00-571-7052
473	Seal Retainer	7346951	5330-00-734-6951

Section II. MANDATORY REPLACEMENT PARTS (Contd)

(1) ITEM NUMBER	(2) NOMENCLATURE	(3) PART NUMBER	(4) NATIONAL (NATO) STOCK NUMBER
474	Seal, Channel	7373291-2	5330-01-126-7512
475	Seal, Channel Lift	7373301	9390-00-737-3301
476	Seal, Cup	10900304	5340-00-523-4305
477	Seal, Felt	7411160	5330-00-741-1160
478	Seal, Felt	7409889	5330-00-740-9889
479	Seal, Frame	7373300	9390-00-737-3300
480	Seal, Oil	8328155	2590-00-593-1852
481	Set, Cylinder Liner Packing	3032874	5330-01-220-2389
482	Set, Cylinder Liner Shim	3019955	5365-01-147-9802
483	Set, Gasket	AR51482	5330-00-133-6236
484	Set, Gasket and Preformed Packing	3011472	5330-00-480-6133
485	Set, Gasket and Shim	7346807	5330-00-513-1443
486	Set, Piston Ring	3801056	2815-01-165-0765
487	Setscrew	11668952	5305-01-032-7355
488	Shim	10900004	5365-00-405-4378
489	Shim	5253129	—
490	Shim	5253130	—
491	Shim	10900005	5365-00-422-1160
492	Shim	5253182	5365-00-245-5048
493	Shim	10900101	5365-00-185-7835
494	Shim	HCF 452	5365-00-267-0680
495	Shim	68192-A	5365-00-378-2885
496	Shim	5186592	5365-00-518-6592
497	Shim	5186593	5365-01-005-3004
498	Shim	6143903	5365-00-614-3903
499	Shim	10-42651-A	5365-01-123-7082
500	Shim	BM56657	5365-00-829-5150
501	Shim	10900043	5365-00-405-0261
502	Shim	68192-B	5365-00-378-2886
503	Shim	10900042	5365-00-159-4669
504	Shim	68192-C	5365-00-378-2887
505	Shim	7375297	5365-00-563-5525
506	Shim	7346751	5365-00-734-6751
507	Sleeve	222-652	4730-01-193-7390
508	Sleeve	4208	4730-00-278-8764
509	Sleeve	475877	4730-01-193-7390
510	Sleeve	8328015	5315-00-850-7038
511	Sleeve	MS39177	4730-00-278-8761
512	Snapring	7521095	5365-00-699-8459
513	Snapring	7346784	5365-00-286-4437

Section II. MANDATORY REPLACEMENT PARTS (Contd)

(1) ITEM NUMBER	(2) NOMENCLATURE	(3) PART NUMBER	(4) NATIONAL (NATO) STOCK NUMBER
514	Snapring	7346787	5365-00-734-6787
515	Snapring	7346786	5365-00-734-6786
516	Snapring	7346785	5365-00-734-6785
517	Snapring	7346738	5365-00-734-6738
518	Spacer	8758279	5310-01-121-0390
519	Spacer Ring	7409080	5365-00-182-9635
520	Spring	251152	5360-00-932-7452
521	Spring	68274	5360-00-664-5343
522	Spring, Helical	401212	5360-00-795-6975
523	Tab Lockwasher	8327009	5310-00-145-2085
524	Tiedown	10-42351	5340-01-123-8324
525	Valve Seat Insert	3014632	2815-01-127-1060
526	Washer	730046-2	5310-01-211-3046
527	Washer, Felt	7411154	5330-00-741-1154
528	Washer, Felt	7409867	5330-00-740-9861
529	Washer, Felt	7409929	5330-00-740-9929
530	Washer, Felt	7411159	5330-00-741-1159
531	Washer, Felt	7417093	5330-00-741-7093
532	Washer, Felt	7417094	5330-00-741-7094
533	Washer, Felt	7409956	5330-00-740-9956
534	Washer, Felt	7409959	5330-00-740-9959
535	Washer, Felt	0761	3930-00-016-9874
536	Washer, Fiber	706062	5840-00-608-2508
537	Washer, Fiber	704191	5310-01-164-0745
538	Washer, Fiber	741160	—
539	Washer, Fiber	704678	5310-01-164-1023
540	Weatherseal	7373291	9390-00-737-3291
541	Weatherseal	12368265	9390-01-285-9623
542	Wick	705944	—
543	Woodruff Key	MS35756-18	5315-00-616-5527
544	Woodruff Key	8327444	5315-00-281-7652
545	Woodruff Key	MS20066-407	5315-00-979-7732
546	Woodruff Key	MS35756-15	5315-00-616-5530
547	Woodruff Key	MS35756-105	5315-00-850-7038
548	Woodruff Key	118002	5315-00-011-8002
549	Woodruff Key	MS20068-271	5315-00-781-2026
550	Woodruff Key	MS35756-14	5315-00-616-5520
551	Woodruff Key	MS35756-17	5315-00-012-4553
552	Woodruff Key	M535756-7	5315-00-616-5513
553	Woodruff Key	8327443	5315-00-201-7650

Section II. MANDATORY REPLACEMENT PARTS (Contd)

(1) ITEM NUMBER	(2) NOMENCLATURE	(3) PART NUMBER	(4) NATIONAL (NATO) STOCK NUMBER
554	Woodruff Key	MS20067-270	5315-00-042-3293
555	Woodruff Key	MS35756-13	5315-00-616-5521
556	Woodruff Key	MS35756-1	5315-00-616-5519
557	Woodruff Key	MS20067-493	5315-01-119-5239
558	Woodruff Key	MS20067-305	5315-00-042-4950
559	Woodruff Key	MS35756-22	5315-00-616-5499
560	Woodruff Key	7535631	5315-01-217-2269
561	Woodruff Key	MS35756-21	5315-00-616-5500
562	Woodruff Key	MS35756-27	5315-00-011-7995
563	Woodruff Key	MS20067-221	5315-00-242-0818
564	Woodruff Key	MS35756-109	5315-00-058-8581
565	Woodruff Key	8328341	5315-00-281-7651
566	Woodruff Key	MS35756-20	5315-00-616-5501
567	Woodruff Key	MS35756-6	5315-00-616-5514
568	Woodruff Key	5168861	5315-00-032-1872
569	Woodruff Key	542688	5315-00-054-2688

APPENDIX E
ILLUSTRATED LIST OF MANUFACTURED ITEMS

This appendix includes complete instructions for making items authorized to be manufactured or fabricated at direct and general support maintenance levels. A reference index is provided to indicate the illustration associated with the manufacture of each item. All bulk materials needed for manufacture of an item are listed by part number or specification number in a tabular list on the illustration.

FIG. NO.	TITLE	PAGE NO.
E-1.	Dowel Pin	E-1
E-2.	0.25-in. (6.35 mm) Radius Gage	E-2
E-3.	Rear Output Shaft Adjusting Fixture	E-3
E-4.	Intermediate Shaft Adjusting Fixture	E-5
E-5.	Guide Screw	E-7
E-6.	Dowel Pin	E-8

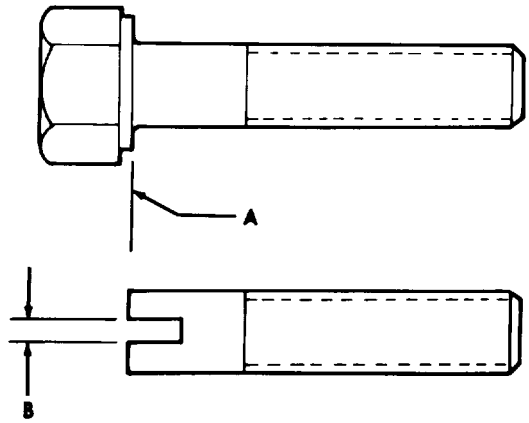

NOTE:

Two dowel pins are required.

PROCEDURE:

1. Fabricate from screw, part number MS90727-178 (NSN 5305-00-726-2572), or equivalent.
2. Remove head of screw at A.
3. Cut slot in screw at B. Slot will be large enough to accommodate screwdriver tip.

Figure E-1. Dowel Pin.

APPENDIX E (Contd)

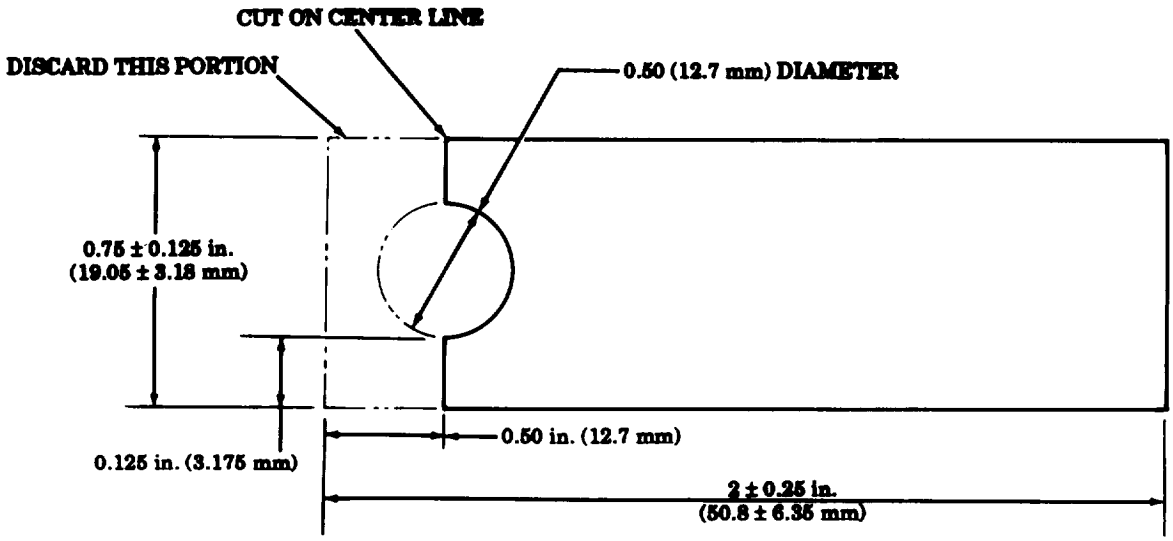

MATERIALS	
DESCRIPTION	NSN
Metal, sheet, MIL-S-7947, 0.025 in. (0.635 mm) thick	9515-00-003-5518

NOTE:

The tolerance on all two place decimal dimensions is ±0.03 in. (0.76 mm). The tolerance on all three place decimal dimensions is ±0.005 in. (0.127 mm).

PROCEDURE:

1. Trim sheet metal to dimensions shown in above diagram.
2. Drill one hole in sheet metal 0.5 in. (12.7 mm) in diameter.
3. Cut through center line of hole.
4. Remove burrs and sharp edges from sheet metal.

Figure E-2. 0.25-in. (6.35 mm) Radius Gage.

APPENDIX E (Contd)

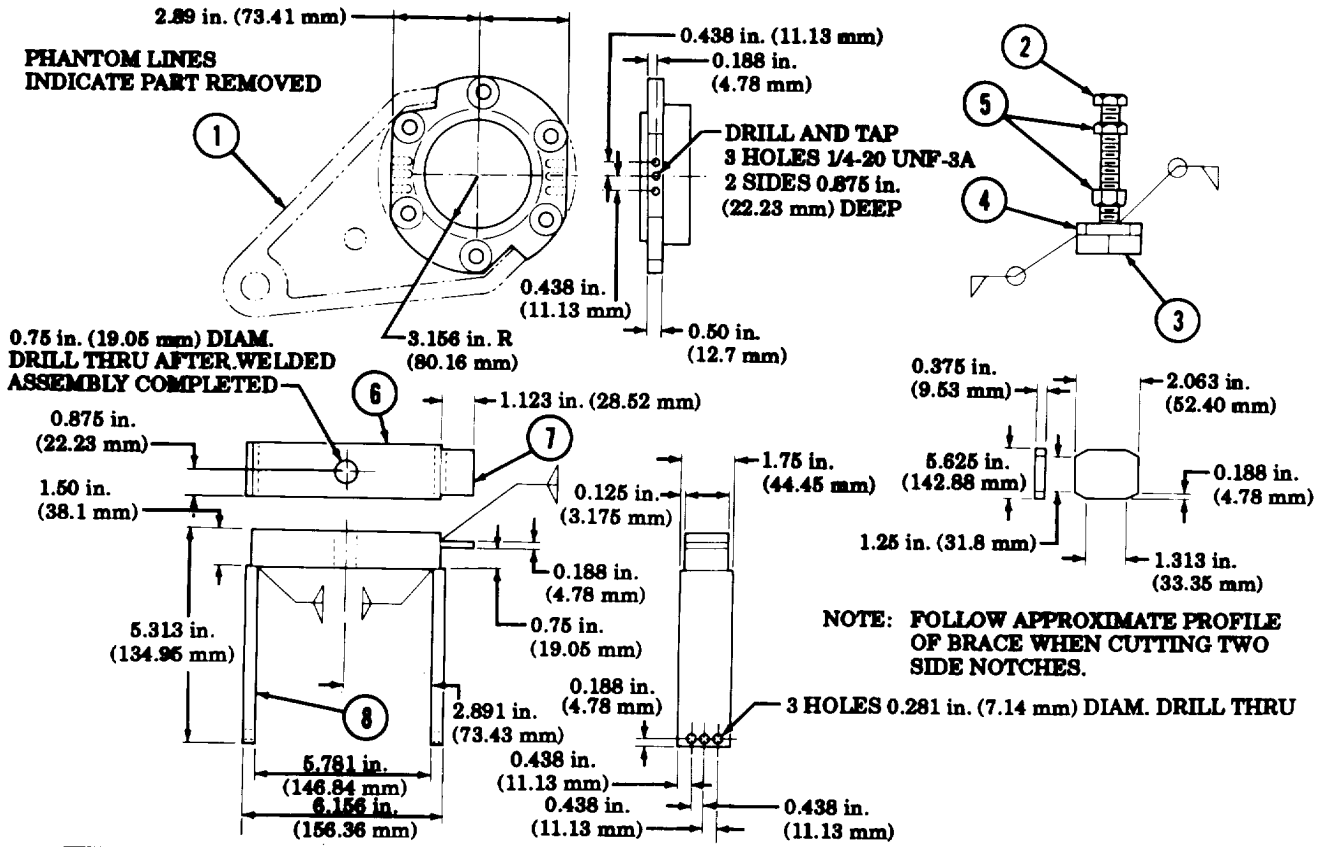

ITEM NO.	REQ'D	MATERIALS DESCRIPTION	NSN
2	1	Bolt: MS90728-171	5305-00-724-7248
6	1	Bolt Guide: 6-5132 x 1-1/2 x 1-1/2, MS14296H405	9510-00-954-5302
8	2	Bolt Guide Support: 5-15/16 x 1-3/4 x 3/8, MS14296H389	9510-00-203-5845
1	1	Cover, Rear Output Shaft: 8758288	3130-01-162-3856
3	1	Flange Nut, Slotted Head: MS35692-1	5310-00-842-1218
7	1	Gage Support: 1-1/2 x 1-1/8 x 3/16, MS14296H405	9510-00-954-5302
4	1	Mounting Plate: 2-1/16 x 1-5/8 x 3/8, MS14296H369	9510-00-203-2175
5	2	Nut: MS51922-49	5310-00-269-4040

NOTES:

1. The tolerance on all two place decimal dimensions is ±0.03 in, (0.76 mm). The tolerance on all three place decimal dimensions is ±0.005 in. (0.127 mm).
2. Refer to TM 9-237, Operator's Manual: Welding Theory and Application, for welding instructions.

PROCEDURE

1. Fabricate rear output shaft adjusting fixture using materials and instructions above.
2. Assemble using instructions on next page.

Figure E-3. Rear Output Shaft Adjusting Fixture.

APPENDIX E (Contd)

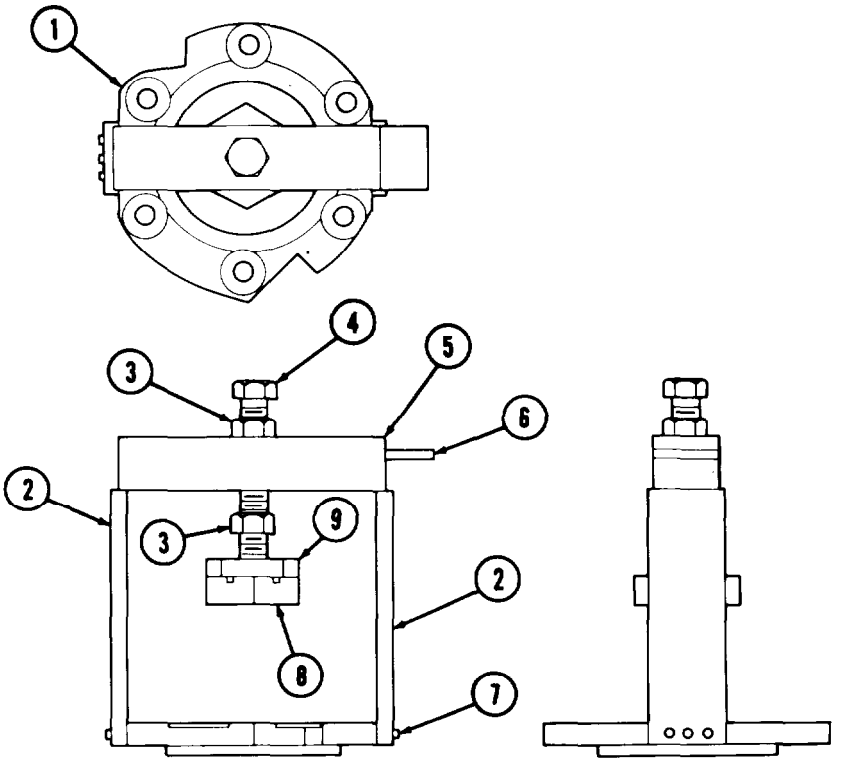

ITEM NO.	REQ'D	MATERIALS DESCRIPTION	NSN
4	1	Bolt: MS90728-171	5305-00-724-7248
5	1	Bolt Guide: 6-5/32 x 1-1/2 x 1-1/2, MS14296H405	9510-00-954-5302
2	2	Bolt Guide Support: 5-15/16 X 1-3/4 x 3/8, MS14296H389	9510-00-203-5845
1	1	Cover, Rear Output Shaft: 8758288	3130-01-162-3856
6	1	Gage Support: 1-1/2 x 1-1/8 x 3/16, MS14296H405	9510-00-954-5302
8	1	Flange Nut, Slotted Head: MS35692-1	5310-00-842-1218
9	1	Mounting Plate: 2-1/16 x 1-5/8 x 3/8, MS14296H369	9510-00-203-2175
3	2	Nut: MS51922-49	5310-00-269-4040
7	6	Screw, Cap, Socket Head: MS16997-70	5305-00-978-9389

PROCEDURE

1. Assemble rear output shaft adjusting fixture using materials and diagram above.
2. Attach two bolt guide supports (2) to cover (1) with six socket head capscrews (7).
3. Thread upper nut (3) onto bolt (4). Thread bolt (4) into bolt guide (5) and gage support (6). Thread lower nut (3), mounting plate (9), and flange nut (8) on bolt (4).

Figure E-3 (Contd). Rear Output Shaft Adjusting Fixture.

APPENDIX E (Contd)

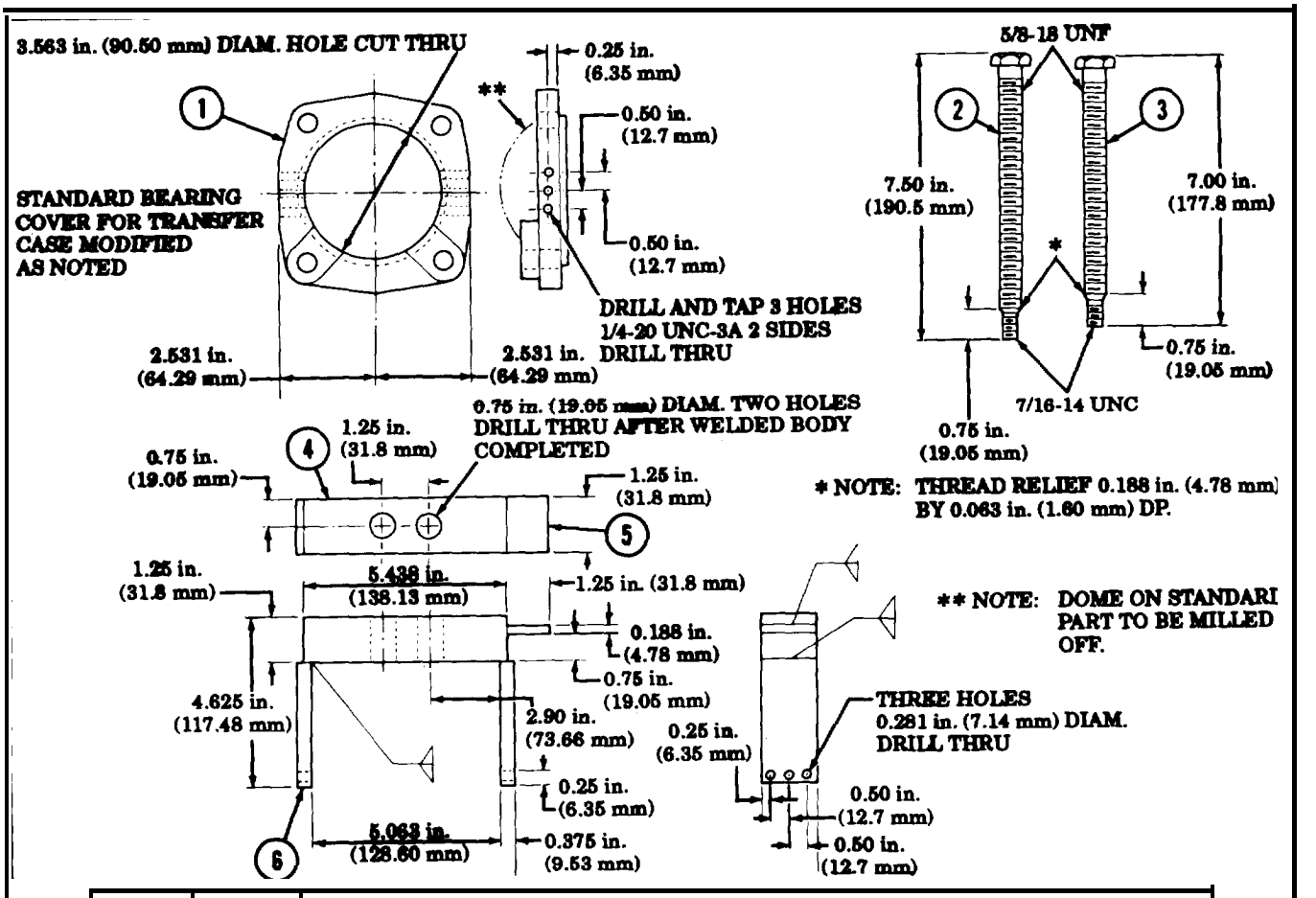

ITEM NO.	REQ'D	MATERIALS DESCRIPTION	NSN
2	1	Bolt: MS16992-610	5305-00-449-2240
3	1	Bolt MS16992-609	5306-00-412-9770
4	1	Bolt Guide: 5-7/16 x 1-1/2 x 1-1/4, MS14296H389	9510-00-203-5845
6	2	Bolt Guide Support: 3/8 x 1-1/2 x 1-1/4, MS14296H403	9510-00-204-0119
1	1	Cover, Rear Bearing 7346759	3110-00-734-6759
5	1	Gage Support: 1-1/2 x 1-1/8 x 3/16, MS14296H369	9510-00-203-2175

NOTES

1. The tolerance on all two place decimal dimensions is ±0.03 in. (0.76 mm). The tolerance on all three place decimal dimensions is ±0.005 in. (0.127 mm).
2. Refer tp TM 9-237, Operator's Manual: Welding Theory and Application, for welding instructions.

PROCEDURE

1. Fabricate intermediate shaft adjusting fixture using materials and instructions above.
2. Assemble using instructions on next page.

Figure E-4. Intermediate Shaft Adjusting Fixture.

APPENDIX E (Contd)

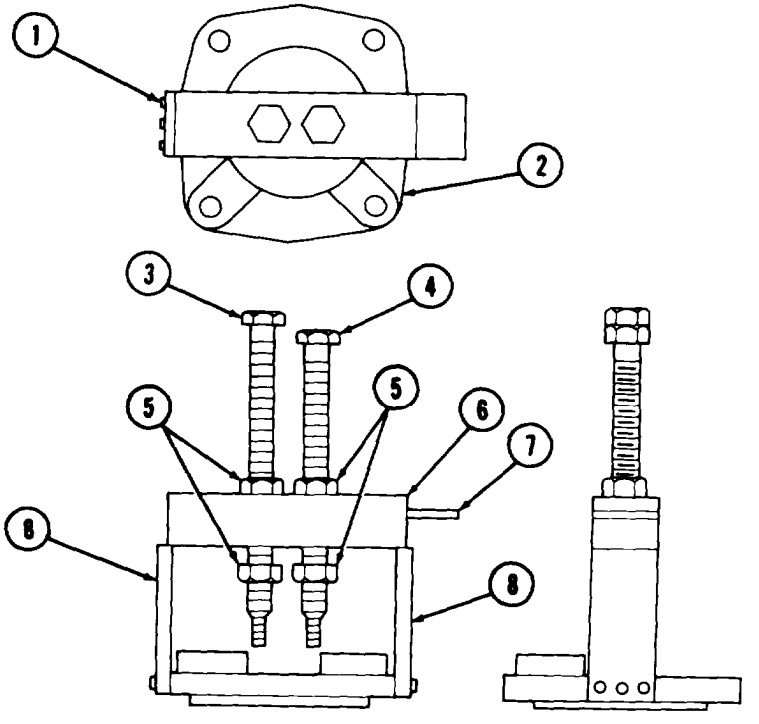

ITEM NO.	REQ'D	MATERIALS DESCRIPTION	NSN
3	1	Bolt: MS16922-610	5305-00-449-2240
4	1	Bolt: MS16992-609	5306-00-412-9770
6	1	Bolt Guide: 5-7/16 x 1-1/2 x 1-1/4, MS14296H389	9510-00-203-5845
8	2	Bolt Guide Support: 3/8 x 1-1/2 x 1-1/4, MS14296H403	9510-00-204-0119
2	2	Cover, Rear Bearing 7346759	3110-00-734-6759
7	1	Gage Support: 1-1/2 x 1-1/8 x 3/16, MS14296H369	9510-00-203-2175
5	4	Nut: MS51922-53	5310-00-225-6408
1	6	Screw, Cap, Socket Head: MS16997-70	5305-00-978-9389

PROCEDURE:

1. Assemble intermediate shaft adjusting fixture using materials and diagram above.
2. Thread upper nut (5) onto bolt (3). Thread bolt (3) into bolt guide (6) and gage support (7). Thread lower nut (5) onto bolt (3).
3. Thread upper nut (5) onto bolt (4). Thread bolt (4) into bolt guide (6). Thread lower nut (5) onto bolt (4).
4. Attach two bolt guide supports (8) to cover (2) with six socket head capscrews (1).

Figure E-4 (Contd). Intermediate Shaft Adjusting Fixture.

APPENDIX E (Contd)

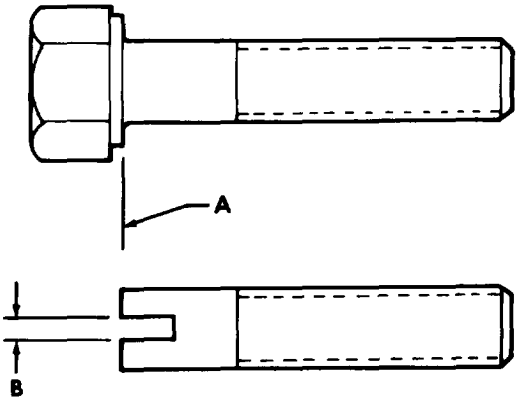

NOTES:

Two guide screws are required.

PROCEDURE:

1. Fabricate from screw, part number 177734 (NSN 5305-01-072-4270) or equivalent.
2. Remove head of screw at A.
3. Cut slot in screw at B. Slot will be large enough to accommodate screwdriver tip.

Figure E-5. Guide Screw.

APPENDIX E (Contd)

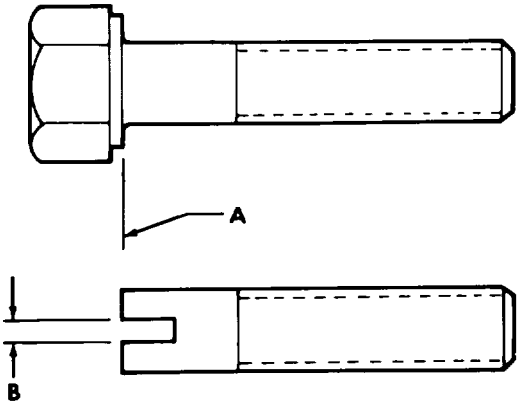

NOTES:

Two dowel pins are required.

PROCEDURE:

1. Fabricate from screw, part number 3011711 (NSN 5305-01-147-4033) or equivalent.
2. Remove head of screw at A
3. Cut slot in screw at B. Slot will be large enough to accommodate screwdriver tip.

Figure E-6. Dowel Pin.

APPENDIX F
TORQUE LIMITS

F-1. GENERAL

This section provides general torque limits for screws used on the M809 series vehicles. Special torque limits are indicated in the maintenance procedures for applicable components. The general torque limits given in this appendix shall be used when specific torque limits are not indicated in the maintenance procedure. These general torque limits cannot be applied to screws that retain rubber components. The rubber components will be damaged before the correct torque limit is reached. If a special torque limit is not given in the maintenance instructions, tighten the screw or nut until it touches the metal bracket, then tighten it one more turn.

F-2. TORQUE LIMITS

Table F-1 lists dry torque limits. Dry torque limits are used on screws that do not have lubricants applied to the threads. Table F-2 lists wet torque limits. Wet torque limits are used on screws that have high pressure lubricants applied to the threads.

F-3. HOW TO USE TORQUE TABLE

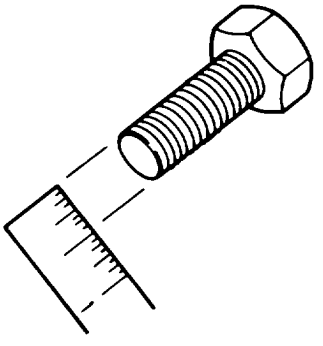

a. Measure the diameter of the screw you are installing.

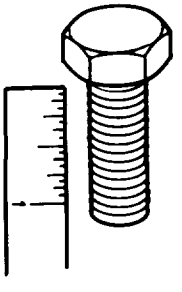

b. Count the number of threads per inch.

c. Under the heading SIZE, look down the left hand column until you find the diameter of the screw you are installing (there will usually be two lines beginning with the same size).

d. In the second column under SIZE, find the number of threads per inch that matches the number of threads you counted in step b.

CAPSCREW HEAD MARKINGS

Manufacturer's marks may vary.
These are all SAE Grade 5
(3-line).

e. To find the grade screw you are installing, match the markings on the head to the correct picture of CAPSCREW HEAD MARKINGS on the torque table.

f. Look down the column under the picture you found in step e. until you find the torque limit (in lb-ft or N•m) for the diameter and threads per inch of the screw.

Table F-1. Torque Limits for Dry Fasteners.

CAPSCREW HEAD MARKINGS

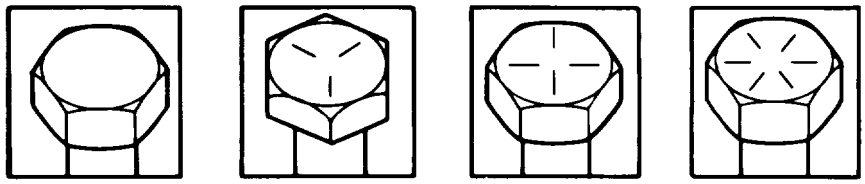

SUE			TORQUE							
			SAE GRADE No. 1 or 2		SAE GRADE No. 5		SAE GRADE NO.6 or 7		SAE GRADE NO. 8	
DIA. INCHES	THREADS PER INCH	DIA. MILLIMETERS	POUND FEET	NEWTON METERS	POUND FEET	NEWTON METERS	POUND FEET	NEWTON METERS	POUND FEET	NEWTON METERS
1/4	20	6.35	5	6.78	8	10.85	10	13.56	12	16.27
1/4	28	6.35	6	8.14	10	13.56	—	—	14	18.98
5/16	18	7.94	11	14.92	17	23.05	19	25.76	24	32.54
5/16	24	7.94	13	17.63	19	25.76	—	—	27	36.61
3/8	16	9.53	18	24.41	31	42.04	34	46.10	44	59.66
3/8	24	9.53	20	27.12	35	47.46	—	—	49	66.44
7/16	14	11.11	28	37.97	49	66.44	55	74.58	70	94.92
7/16	20	11.11	30	40.68	55	74.58	—	—	78	105.77
1/2	13	12.70	39	52.88	75	101.70	85	115.26	105	142.38
1/2	20	12.70	41	55.60	85	115.26	—	—	120	162.72
9/16	12	14.29	51	69.16	110	149.16	120	162.72	155	210.18
9/16	18	14.29	55	74.58	120	162.72	—	–	170	230.52
5/8	11	15.88	63	85.43	150	203.40	167	226.45	210	284.76
5/8	18	15.88	95	128.82	170	230.52	—	–	240	325.44
3/4	10	19.05	105	142.38	270	366.12	280	379.68	375	508.50
3/4	16	19.05	115	155.94	295	400.02	–	–	420	569.52
7/8	9	22.23	160	216.96	395	535.62	440	596.64	605	820.38
7/8	14	22.23	175	237.30	435	589.86	—	—	675	915.30
1	8	25.40	235	318.66	590	800.04	660	894.96	910	1233.96
1	14	25.40	250	339.00	660	894.96	—	—	990	1342.44
1-1/8	–	28.58	–	–	800-880	1084.8-1193.3	–	—	1280-1440	1735.7-1952.6
1-1/4	—	31.75	–	–	–	–	–	–	1820-2000	2467.9-2712.0
1-3/8	–	34.93	—	—	1460-1680	1979.8-2278.1	—	–	2380-2720	3227.3-3688.3
1-1/2	–	38.10	–	–	1940-2200	2630.6-2983.2	–	–	3160 3560	4285.0-4827.4

Table F-2. Torque Limits for Wet Fasteners.

CAPSCREW HEAD MARKINGS

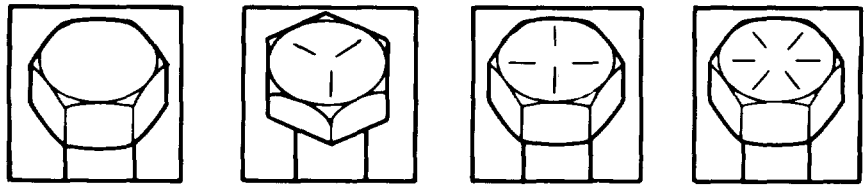

SIZE			TORQUE							
			SAE GRADE No. 1 or 2		SAE GRADE No. 5		SAE GRADE NO. 6 or 7		SAE GRADE No. 8	
DIA. INCHES	THREADS PER INCH	DIA. MILLIMETERS	POUND FEET	NEWTON METERS	POUND FEET	NEWTON METERS	POUND FEET	NEWTON METERS	POUND FEET	NEWTON METERS
1/4	20	6.35	4.5	6.1	7.2	9.76	9.0	12.20	10.8	14.64
1/4	28	6.35	5.4	7.32	9.0	12.20	—	—	12.6	17.09
5/16	18	7.94	9,9	13.42	15.3	20.75	17.1	23.19	21.6	29.29
5/16	24	7.94	11.7	15,87	17.1	23.19	–	—	24.3	32.95
3/8	16	9.53	16.2	21.97	27.9	37.83	30.6	41.49	39.6	53.70
3/8	24	9.53	18.0	24.41	31.5	42.71	—	—	44.1	59.80
7/16	14	11.11	25.2	34.17	44.1	59.80	49.5	67.12	63.0	85.43
7/16	20	11.11	27,0	36.61	49.5	67.12	—	—	70.2	95.19
1/2	13	12.70	35.1	47,60	67.5	91.53	76.5	103.73	94.5	128.14
1/2	20	12.70	36.9	50.04	76.5	103.73	—	–	108.0	146.45
9/16	12	14.29	45.9	62.24	99.0	134.24	108.0	146.45	139.5	189.16
9/16	18	14.29	49.5	67.12	108.0	146.45	—	—	153.0	207.47
5/8	11	15.88	56.7	76.89	135.0	183.06	150.3	203.81	189.0	256.28
5/8	18	15.88	85.5	115.94	153.0	207.47	—	—	216.0	292.90
3/4	10	19.05	94.5	128.14	243.0	329.51	252.0	341.71	337.5	457.65
3/4	16	19.05	103.5	140.35	265.5	360.02	—	–	378.0	512.57
7/8	9	22.23	144.0	195.26	355.5	482.06	396.0	536.98	544.5	738.34
7/8	14	22.23	157.5	213.57	391.5	530.87	—	–	607.5	823.77
1	8	25.40	211.5	286.79	531.0	720.04	594.0	805.46	819.0	1110.56
1	14	25.40	225.0	305.10	594.0	805.46	–	—	891.0	1208.20
1-1/8	—	28.58	–	–	720.0-792.0	976.32-1073.95	—	—	1152.0-1296.0	1562.11-1757.38
1-1/4	—	31.75	—	–	—	—	—	—	1637.99-1800.00	2221.11-2440.80
1-3/8	—	34.93	–	–	1314.0-1512.0	1781.78-2050.27	—	—	2142.0-2448.0	2904.55-3319.49
1-1/2	–	38.10	—	–	1746.0-1980.0	2367.58-2684.88	–	–	2844.0-3204.0	3856.5-4344.62

APPENDIX F (Contd)

Tubing Application Tightening Assembly Instructions

Slide tubing over barbed insert until it bottoms on fitting.

MINI-BARB

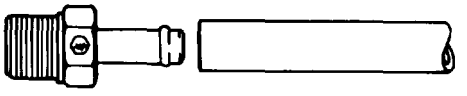

---

1. Slide nut and then sleeve on tubing.
2. Slide I.D. of tubing onto fitting insert until it bottoms.
3. Assemble nut to fitting body.
4. Tighten assembly finger tight to cover body threads.

KNURL-ON

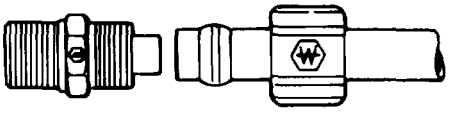

---

1. Slide nut and then sleeve on tubing.
2. Slide I.D. of tubing onto fitting insert until it bottoms.
3. Assemble nut to fitting body.
4. Finger tighten nut. From that point, tighten with a wrench two complete turns.

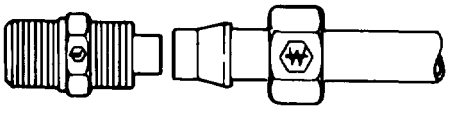

---

1. Cut tubing to desired length. Ensure ends are cut reasonably square.
2. Slide tubing into the preassembled fitting and push until tube bottoms.
3. Tighten nut as indicated in chart. Another check on proper assembly is dimension "A," when nut is fully tightened.

NYLON TUBING FOR AIRBRAKE

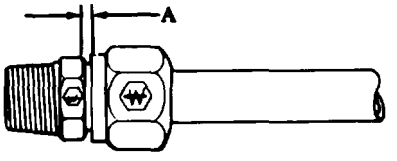

DISASSEMBLY — Remove nut and pull tubing out of fitting body. Insert will remain on tubing.

REASSEMBLY — Push tubing and insert into fitting body until it bottoms. Thread nut onto fitting body and tighten as in step 3.

TUBE O.D.	TIGHTEN NUT TO.	A
1/4	85-115 lb-in. (9.6 - 13.0 N•m)	.085/.105
3/8	12-17 lb-ft (16.3 - 23.1 N•m)	.125/.145
1/2	25-33 lb-ft (33.9 - 44.7 N•m)	.100/.120
5/8	26-35 lb-ft (35.3 - 47.5 N•m)	.115/.135
3/4	38-50 lb-ft (51.5 - 67.8 N•m)	.180/.200

APPENDIX F (Contd)

Tubing Application Tightening Assembly Instructions (Contd)

1. Slide nut and then sleeve on tubing. Threaded end of nut (C) must face out.
2. Insert tubing into fitting. Ensure tubing is bottomed on fitting shoulder.
3. Thread nut onto fitting body until it is hand tight.
4. From that point, tighten with a wrench the number of turns indicated at right.

COPPER TUBING
FOR HAND AIRBRAKE

TUBE SIZE	ADDITIONAL NUMBER OF TURNS FROM HAND TIGHT
1/4, 3/8	1-3/4
1/2, 5/8, 3/4	3-1/4

F-4. TORQUE WRENCH ADAPTERS

Some tasks require the use of a torque wrench adapter when the nut or screw cannot be reached with a regular socket on the end of the torque wrench. These adapters add to the overall length of the torque wrench and make the dial or scale reading less than the actual torque applied to the nut or screw. To prevent overtorquing and damage to equipment, calculate correct dial or scale reading using Conversion Formula (para. F-5).

APPENDIX F (Contd)

F-5. CONVERSION FORMULA

Corrected dial or scale readings are determined by the use of the following formula:

$$\text{Corrected reading} = \text{Required torque value} + \frac{\text{Length of torque wrench} + \text{Length of adapter}}{\text{Length of torque wrench}}$$

NOTE

The length of the torque wrench is measured from the center of the handle to the center of the drive. The length of the adapter is measured from the center of the drive to the center of the wrench.

Example:

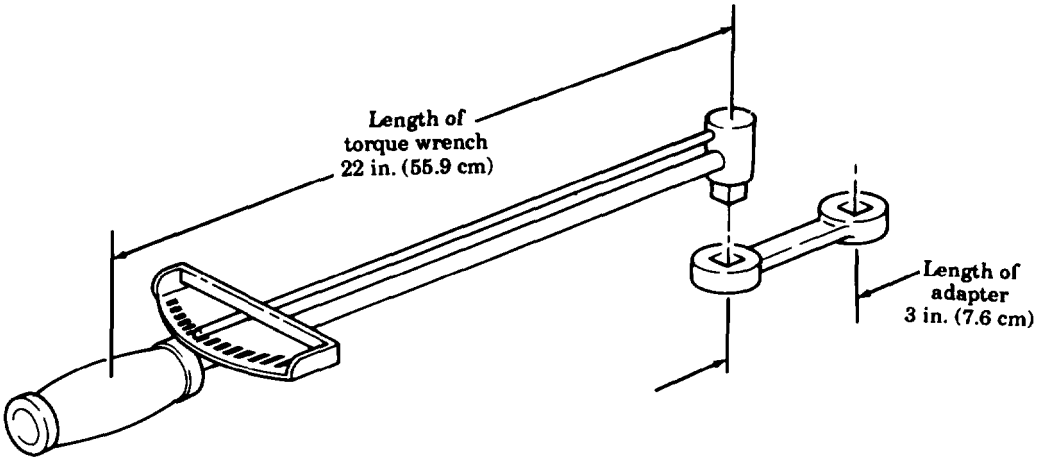

F5 CONVERSION FORMULA

In this example, the torque wrench measures 22 in. (55.9 cm) and the adapter is 3 in, (7.6 cm). The required torque is 19 lb-ft (25.8 N•m).

$$\text{Corrected reading} = 19 \text{ lb-ft } (25.8 \text{ N•m}) + \frac{22 \text{ in. } (55.9 \text{ cm}) + 3 \text{ in. } (7.6 \text{ cm})}{22 \text{ in. } (55.9 \text{ cm})}$$

$$\text{Corrected reading} = 19 \text{ lb-ft } (25.8 \text{ N•m}) + \frac{25 \text{ in. } (63.5 \text{ cm})}{22 \text{ in. } (55.9 \text{ cm})}$$

$$\text{Corrected reading} = 19 \text{ lb-ft } (25.8 \text{ N•m}) + 1.14$$

$$\text{Corrected reading} = 17 \text{ lb-ft } (23.1 \text{ N•m})$$

INDEX

NOTE

This index is a guide to both volumes of this manual. Use the Table of Contents to determine in which volume specific paragraphs are located.

	Para	Page
A		
Access door, bonnet, maintenance:		
Assembly	15-47d	15-180
Cleaning and inspection	15-47c	15-178
Disassembly	15-47b	15-178
Installation	15-47e	15-181
Removal	15-47a	15-178
Accessory drive and pulley removal:		
Removal	3-32	3-11
Accessory drive installation:		
Installation	3-67	3-204
Accessory drive maintenance:		
Assembly	3-9d	3-22
Cleaning and inspection	3-9c	3-22
Disassembly	3-9b	3-20
Installation	3-9e	3-23
Removal	3-9a	3-20
Accessory drive pulley installation:		
Installation	3-70	3-207
Accessory drive pulley replacement:		
Installation	3-8b	3-18
Removal	3-8a	3-18
AC manual starter switches replacement:		
Installation	15-89b	15-330
Removal	15-89a	15-330
Air compressor repair:		
Assembly	11-5d	11-22
Cleaning	11-5b	11-14
Disassembly	11-5a	11-10
Inspection and repair	11-5c	11-16
Air compressor replacement:		
Installation	11-3b	11-6
Removal	11-3a	11-4
Air conditioner replacement:		
Installation	15-49b	15-192
Removal	15-49a	15-188
Air conditioner wiring harness replacement:		
Installation	15-65b	15-246
Removal	15-65a	15-244
Air cylinder, front axle engagement, maintenance:		
Assembly	9-2d	9-4
Cleaning and inspection	9-2c	9-2
Disassembly	9-2b	9-2
Installation	9-2e	9-4
Removal	9-2a	9-2
Air cylinder, fuel pump, maintenance:		
Adjustment	5-21c	5-56
Installation	5-21b	5-56
Removal	5-21a	5-56
Air ducts, ceiling, and supports replacement:		
Installation	15-45b	15-170
Removal	15-45a	15-168
Alinement, frame, inspection:		
Frame leveling	13-6a	13-24
Frame squareness	13-6c	13-28
Horizontal bow inspection	13-6b	13-24
Vertical bow inspection	13-6d	13-30
Assembly - precautionary rules	2-11	2-38
Assist cylinder, power steering, maintenance:		
Assembly	12-7c	12-17
Cleaning and inspection	12-7b	12-16
Disassembly	12-7a	12-16
Automatic brake, rear winch, maintenance:		
Cleaning and inspection	16-11b	16-74
Installation	16-11c	16-75
Removal	16-11a	16-74
Auxiliary pump, converter and, wiring harnesses replacement:		
Installation	15-80b	15-292
Removal	15-80a	15-290
Auxiliary pump, liftgate, and bracket replacement (M820A2):		
Installation	15-56b	15-214
Removal	15-56a	15-214
Axle, forward-rear and rear-rear, replacement:		
Installation	10-5b	10-17
Removal	10-5a	10-16
Axle, front, replacement:		
Installation	10-2b	10-2
Removal	10-2a	10-2
B		
Base, driver's seat, maintenance:		
Inspection and repair	14-4b	14-4
Installation	14-4c	14-5
Removal	14-4a	14-2
Beam, retractable, replacement		
Installation	15-26b	15-80
Removal	15-26a	15-80

INDEX (Contd)

	Para	Page
Blackout and clearance light wiring harness replacement		
Installation	15-71b	15-264
Removal	15-71a	15-264
Blackout and emergency light fixtures replacement		
Installation	15-91b	15-333
Removal	15-91a	15-333
Blackout bypass wiring harness replacement:		
Installation	15-70b	15-262
Removal	15-70a	15-260
Blackout wiring harness, right and left side, replacement:		
Installation	15-72b	15-268
Removal	15-72a	15-266
Blower housing, personnel heater fuel line and, replacement:		
Installation	17-19b	17-50
Removal	17-19a	17-50
Blower motor, engine coolant heater, maintenance:		
Cleaning and inspection	17-4b	17-8
Installation	17-4c	17-9
Removal	17-4a	17-8
Blower motor, personnel heater, replacement:		
Installation	17-20b	17-52
Removal	17-20a	17-52
Body, cargo, frame rail sill replacement:		
Installation	15-3b	15-6
Removal	15-3a	15-6
Body, cargo, replacement:		
Installation	15-2b	15-4
Removal	15-2a	15-2
Body, dump, maintenance:		
Cleaning, inspection, and repair	15-13b	15-32
Installation	15-13c	15-32
Removal	15-13a	15-28
Body, tractor wrecker, replacement		
Installation	15-8b	15-16
Removal	15-8a	15-14
Body, van, maintenance:		
Inspection	15-24b	15-74
Installation	15-24c	15-74
Removal	15-24a	15-72
Body, wrecker, replacement		
Installation	15-5b	15-10
Removal	15-5a	15-8
Bonnet access door maintenance:		
Assembly	15-47d	15-180
Cleaning and inspection	15-47c	15-178
Disassembly	15-47b	15-178
Installation	15-47e	15-181
Removal	15-47a	15-178
Bonnet door maintenance:		
Assembly	15-48d	15-186
Cleaning and inspection	15-48c	15-186
Disassembly	15-48b	15-184
Installation	15-48e	15-186
Removal	15-48a	15-182
Bonnet frame repair		
Assembly	15-46b	15-174
Disassembly	15-46a	15-172
Boom assembly replacement (M816):		
Installation,	16-18b	16-108
Removal	16-18a	16-104
Boom, boom extension, and rollers, crane shipper, maintenance (M819):		
Boom extension assembly	16-34o	16-208
Boom extension disassembly	16-34f	16-200
Boom extension installation	16-34s	16-210
Boom extension removal	16-34b	16-197
Boom installation	16-34r	16-210
Boom removal	16-34c	16-198
Cleaning and inspection	16-34j	16-202
Extension cylinder installation	16-34q	16-208
Extension cylinder removal	16-34d	16-198
Front lower roller assembly and adjustment	16-34n	16-206
Front lower roller disassembly	16-34g	16-200
Middle lower roller assembly	16-34m	16-206
Middle lower roller disassembly	16-34h	16-201
Repair	16-34k	16-202
Shipper installation	16-34t	16-212
Shipper removal	16-34a	16-194
Upper roller assembly and adjustment	16-34l	16-204
Upper roller disassembly	16-34i	16-201
Upper roller installation	16-34p	16-208
Upper roller removal	16-34e	16-189

INDEX (Contd)

	Para	Page
Boom elevating cylinders maintenance (M816):		
Assembly	16-14d	16-86
Cleaning and inspection	16-14c	16-84
Disassembly	16-14b	16-84
Installation	16-14e	16-88
Removal	16-14a	16-82
Boom extension cylinder maintenance (M819):		
Assembly	16-35d	16-216
Cleaning and inspection	16-35b	16-214
Disassembly	16-35a	16-214
Repair	16-35c	16-216
Boom, inner, maintenance (M816):		
Assembly	16-19d	16-116
Cleaning and inspection	16-19c	16-116
Disassembly	16-19b	16-114
Installation	16-19e	16-118
Removal	16-19a	16-112
Boom lift cylinder maintenance (M819):		
Assembly	16-33e	16-192
Cleaning and inspection	16-33c	16-191
Disassembly	16-33b	16-190
Installation	16-33f	16-192
Removal	16-33a	16-188
Repair.	16-33d	16-191
Boom repair (M816):		
Assembly	16-21c	16-128
Cleaning, inspection, and repair	16-21b	16-127
Removal	16-21a	16-124
Boom roller, upper and lower, maintenance (M816):		
Assembly	16-13d	16-78
Cleaning and inspection	16-13c	16-78
Disassembly	16-13b	16-77
Installation	16-13e	16-80
Remora]	16-13a	16-77
Boom swing mechanism replacement (M819):		
Installation	16-30b	16-177
Removal	16-30a	16-176
Box, control center, maintenance:		
Assembly	15-84c	15-318
Disassembly	15-84b	15-316
Installation	15-84d	15-318
Removal	15-84a	15-316
Box, converter junction, replacement:		
Installation	15-86b	15-324
Removal,	15-86a	15-322
Box, electrical, replacement:		
Installation	15-90b	15-332
Removal	15-90a	15-332
Box, outlet, replacement:		
Installation	15-88b	15-328
Removal	15-88a	15-328
Brace, safety, replacement:		
Installation	15-21b	15-69
Removal	15-21a	15-69
Brackets, lifting, replacement:		
Installation	3-13b	3-36
Removal	3-13a	3-36
Brakedrum, parking and service, repair:		
Cleaning	11-7a	11-28
Inspection and repair	11-7b	11-28
Brake, front winch drag, replacement:		
Installation	16-6b	16-42
Removal	16-6a	16-41
Brake, rear winch automatic, maintenance:		
Cleaning and inspection	16-11b	16-74
Installation	16-11c	16-75
Removal	16-11a	16-74
Brakeshoe, parking and service, repair:		
Parking and service brakeshoe inspection and repair	11-6c	11-26
Parking brakeshoe assembly	11-6e	11-27
Parking brakeshoe disassembly	11-6a	11-26
Service brakeshoe assembly	11-6d	11-27
Service brakeshoe disassembly	11-6b	11-26
Burner, engine coolant heater, maintenance:		
Cleaning and inspection	17-10b	17-24
Installation	17-10c	17-24
Removal	17-10a	17-24
Burner, personnel heater, maintenance		
Assembly,	17-21d	17-58
Cleaning and inspection	17-21c	17-56
Disassembly	17-21b	17-56
Installation	17-21e	17-59
Removal	17-21a	17-54

INDEX (Contd)

	Para	Page
C		
Cab (gondola), crane, replacement (M819):		
Installation	16-29b	16-174
Removal	16-29a	16-174
Cable hoist winch replacement (M819):		
Installation	16-31b	16-180
Removal	16-31a	16-178
Cable tensioner, front winch, maintenance:		
Assembly	16-4d	16-32
Cleaning and inspection	16-4c	16-30
Disassembly	164b	16-28
Installation	16-4e	16-32
Removal	16-4a	16-28
Cable tensioner, rear winch, maintenance:		
Assembly	16-10c	16-72
Cleaning and inspection	16-10b	16-70
Disassembly	16-10a	16-70
Cab protector shield maintenance:		
Assembly	15-12c	15-26
Cleaning and inspection	15-12b	15-26
Disassembly	15-12a	15-24
Cab replacement	14-3	14-1
Cam follower housing maintenance:		
Assembly	3-19e	3-56
Cleaning and inspection	3-19c	3-54
Disassembly	3-19b	3-53
Installation	3-19f	3-58
Removal	3-19a	3-51
Repair	3-19d	3-54
Cam follower installation:		
Installation	3-61	3-194
Cam follower removal:		
Removal	3-41	3-123
Camshaft installation:		
Installation	3-56	3-184
Camshaft maintenance:		
Assembly	3-44	3-128
Camshaft bushing removal	3-44f	3-128
Camshaft gear backlash measurement	3-44a	3-126
Cleaning and inspection	3-44d	3-127
Disassembly	3-44c	3-127
Removal	3-44b	3-127
Cargo body frame rail sill replacement		
Installation	15-3b	15-6
Removal	15-3a	15-6
Cargo body replacement		
Installation	15-2b	15-4
Removal	15-2a	15-2
Ceiling air ducts and supporsa replacement		
Installation	15-45b	15-170
Removal	1545a	15-168
Ceiling and frame maintenance:		
Cleaning and inspection	15-36b	15-134
Installation	15-36c	15-136
Removal	15-36a	15-131
Ceiling filler and side panels replacement		
Left side panel and filler installation	15-44d	15-167
Left side panel and filler removal	1544a	15-166
Right side panel and filler installation	15-44c	15-166
Right side panel and filler removal	15-44b	15-166
Ceiling light fixtures replacement (M820A1):		
Installation	15-93b	15-336
Removal	15-93a	15-336
Ceiling rear cover replacement (M820A1):		
Installation	15-40b	15-157
Removal	1540a	15-157
Ceiling rear cover replacement (M820, M820A2):		
Installation	15-41b	15-158
Removal	15-41a	15-158
Ceiling registers and deflectors replacement:		
Installation	15-38b	15-154
Removal	15-38a	15-154
Ceiling transition maintenance (M820, M820A2):		
Assembly	15-42c	15-162
Disassembly	15-42b	15-160
Installation	15-42d	15-162
Removal	15-42a	15-160
Ceiling transition maintenance (M820A1):		
Assembly	1543c	15-164
Disassembly	15-43b	15-164
Installation	15-43d	15-164
Removal	15-43a	15-164

INDEX (Contd)

	Para	Page
Checklist preliminary maintenance; mechanical and power steering system maintenance	12-3	12-2
Check valves replacement (M819):		
Elevating cylinder check valve installation	16-38c	16-228
Elevating cylinder check valve removal	16-38a	16-228
Hoist winch motor check valve installation	16-38d	16-229
Hoist winch motor check valve removal	16-38b	16-228
Circuit breaker harness and circuit breaker replacement:		
Circuit breaker harness installation	15-69b	15-258
Circuit breaker harness removal	15-69a	15-258
Circuit breaker installation	15-69d	15-258
Circuit breaker removal	15-69c	15-258
Cleaning	2-8	2-33
Clearance light wiring harness, blackout and, replacement:		
Installation	15-71b	15-264
Removal	15-71a	15-264
Closing cylinder, liftgate, maintenance (M820A2):		
Assembly	15-60d	15-232
Cleaning and inspection	15-60c	15-232
Disassembly	15-60b	15-230
Installation	15-60e	15-232
Removal	15-60a	15-230
Clutches, liftgate, replacement (M820A2):		
Installation	15-54b	15-208
Removal	15-54a	15-208
Clutch, flywheel and, installation:		
Clutch installation	3-59b	3-192
Flywheel installation	3-59a	3-191
Clutch, flywheel and, removal:		
Removal	3-42	3-124
Clutch maintenance:		
Cleaning and inspection	4-2b	4-2
Clutch lever adjustment	4-2c	4-2
Installation	4-2d	4-2
Removal	4-2a	4-2
Common and special tools list, Appendix B		B-1
Common tools and equipment	2-1	2-1
Compressor, air, replacement:		
Assembly	11-5d	11-22
Cleaning	11-5b	11-14
Disassembly	11-5a	11-10
Inspection and repair	11-5c	11-16
Compressor, air, replacement:		
Installation	11-3b	11-6
Removal	11-3a	11-4
Conduit, 400 Hz converter harness, replacement:		
Installation	15-87b	15-326
Removal	15-87a	15-326
Conduit, load center, replacement:		
Installation	15-83b	15-314
Removal	15-83a	15-312
Connecting rod, piston and, installation:		
Assembly	3-55a	3-180
Connecting rod side clearance	3-55c	3-182
Installation	3-55b	3-180
Connecting rod, piston and, maintenance:		
Disassembly	3-47b	3-132
Removal	3-47a	3-132
Connectors, fuel crossover, replacement:		
Installation	3-17b	3-48
Removal	3-17a	3-48
Container, engine and, replacement:		
Installation	3-25b	3-98
Removal	3-25a	3-97
Control bracket, personnel heater, replacement:		
Installation	17-17b	17-44
Removal	17-17a	17-44
Control center box maintenance:		
Assembly	15-84c	15-318
Disassembly	15-84b	15-316
Installation	15-84d	15-318
Removal	15-84a	15-316
Control linkage, liftgate, maintenance (M820A2):		
Assembly	15-55d	15-212
Cleaning and inspection	15-55c	15-212
Disassembly	15-55b	15-212
Installation	15-55e	15-212
Removal	15-55a	15-210

INDEX (Contd)

	Para	Page
Control valve bank replacement (M819):		
Installation	16-36b	16-221
Removal	16-36a	16-218
Control valve, liftgate, replacement (M820A2):		
Installation	15-58b	15-224
Removal	15-58a	15-224
Control valve maintenance:		
Assembly	15-19d	15-62
Cleaning and inspection	15-19c	15-62
Disassembly	15-19b	15-60
Installation	15-19e	15-64
Removal	15-19a	15-60
Control valve, power divider governor, replacement		
Installation (M816)	16-50d	16-300
Installation (M819)	16-50c	16-300
Removal (M816)	16-50a	16-299
Removal (M819)	16-50b	16-300
Control valve repair (M816):		
Assembly	16-27c	16-166
Cleaning, inspection, and repair	16-27b	16-164
Disassembly	16-27a	16-164
Converter and auxiliary pump wiring harnesses replacement:		
Installation	15-80b	15-292
Removal	15-80a	15-290
Converter, 400 Hz, and support bracket replacement		
Installation	15-85b	15-320
Removal	15-85a	15-320
Converter, 400 Hz, harness conduit replacement		
Installation	15-87b	15-326
Removal	15-87a	15-326
Converter junction box replacement:		
Installation	15-86b	15-324
Removal	15-86a	15-322
Cooler, oil, maintenance:		
Assembly	3-12d	3-34
Cleaning and inspection	3-12c	3-32
Disassembly	3-12b	3-30
Installation	3-12e	3-34
Removal	3-12a	3-30
Covers, rocker lever housing, installation:		
Installation	3-65	3-202
Covers, rocker lever housing, replacement:		
Installation	3-14b	3-37
Removal	3-14a	3-37
Crane cab (gondola) replacement (M819):		
Installation	16-29b	16-174
Removal	16-29a	16-174
Crane gearcase maintenance (M816):		
Assembly	16-28d	16-172
Cleaning and inspection	16-28c	16-170
Disassembly	16-28b	16-168
Installation	16-28e	16-173
Removal	16-28a	16-168
Crane gondola maintenance (M816):		
Assembly	16-22d	16-134
Cleaning and inspection	16-22c	16-132
Disassembly	16-22b	16-132
Installation	16-22e	16-136
Removal	16-22a	16-130
Crane shipper, boom, boom extension, and rollers maintenance (M819):		
Boom extension assembly	16-34o	16-208
Boom extension disassembly	16-34f	16-200
Boom extension installation	16-34s	16-210
Boom extension removal	16-34b	16-197
Boom installation	16-34r	16-210
Boom removal	16-34c	16-198
Cleaning and inspection	16-34j	16-202
Extension cylinder installation	16-34q	16-209
Extension cylinder removal	16-34d	16-198
Front lower roller assembly and adjustmen t	16-34n	16-206
Front lower roller disassembly	16-34g	16-200
Middle lower roller assembly	16-34m	16-206
Middle lower roller disassembly	16-34h	16-201
Repair	16-34k	16-202
Shipper installation	16-34t	16-212
Shipper removal	16-34a	16-194
Upper roller assembly and adjustment	16-34l	16-204
Upper roller disassembly	16-34i	16-201
Upper roller installation	16-34p	16-208
Upper roller removal	16-34e	16-199

INDEX (Contd)

	Para	Page
Crane turntable maintenance (M816):		
Assembly	16-26d	16-160
Cleaning, inspection, and repair	16-26c	16-160
Disassembly	16-26b	16-158
Installation	16-26e	16-162
Removal	16-26a	16-156
Crankshaft and main bearing installation:		
Installation	3-54	3-178
Crankshaft and main bearing removal:		
Removal	3-48	3-134
Crankshaft flange installation:		
Installation	3-73	3-212
Crankshaft flange maintenance:		
Check runout and wobble	3-6c	3-12
Installation	3-6b	3-10
Removal	3-6a	3-10
Crankshaft flange removal:		
Removal	3-31	3-110
Crosshead installation:		
Installation	3-63	3-198
Crosshead removal:		
Removal	3-39	3-121
Crosshead, valve, maintenance:		
Inspection	3-16b	3-46
Installation and adjustment	3-16c	3-46
Removal	3-16a	3-46
Crossover connector, fuel, installation:		
Installation	3-60	3-193
Cylinder block, cylinder liners and, maintenance:		
Assembly	3-50d	3-147
Cleaning and inspection	3-50c	3-139
Disassembly	3-50b	3-137
Installation	3-50e	3-147
Removal	3-50a	3-136
Cylinder, boom extension, maintenance (M819):		
Assembly	16-35d	16-216
Cleaning and inspection	16-35b	16-214
Disassembly	16-35a	16-214
Repair	16-35c	16-216
Cylinder, boom lift, maintenance (M819):		
Assembly	16-33e	16-192
Cleaning and inspection	16-33c	16-191
Disassembly	16-33b	16-190
Installation	16-33f	16-192
Removal	16-33a	16-188
Repair	16-33d	16-191
Cylinder, extension, repair:		
Cleaning, inspection, and repair	16-20b	16-122
Removal	16-20a	16-120
Reassembly	16-20c	16-122
Cylinder head installation:		
Installation	3-62	3-196
Cylinder head removal:		
Removal	3-40	3-122
Cylinder head repair:		
Assembly	3-51d	3-162
Cleaning	3-51b	3-150
Disassembly	3-51a	3-150
Inspection	3-51c	3-152
Cylinder heads replacement:		
Installation	3-18b	3-50
Removal	3-18a	3-49
Cylinder, hoist, maintenance:		
Assembly	15-15d	15-44
Cleaning and inspection	15-15c	15-42
Disassembly	15-15b	15-40
Installation	15-15e	15-46
Removal	15-15a	15-38
Cylinder, liftgate closing, maintenance (M820A2):		
Assembly	15-60d	15-232
Cleaning and inspection	15-60c	15-232
Disassembly	15-60b	15-230
Installation	15-60e	15-232
Removal	15-60a	15-230
Cylinder, liftgate, maintenance (M820A2):		
Assembly	15-59d	15-228
Cleaning and inspection	15-59c	15-227
Disassembly	15-59b	15-226
Installation	15-59e	15-228
Removal	15-59a	15-226
Cylinder liners and cylinder block maintenance:		
Assembly	3-50d	3-147
Cleaning and inspection	3-50c	3-139
Disassembly	3-50b	3-137
Installation	3-50e	3-147
Removal	3-50a	3-136
Cylinder, power steering assist, maintenance:		
Assembly	12-7c	12-17
Cleaning and inspection	12-7b	12-16
Disassembly	12-7a	12-16

INDEX (Contd)

	Para	Page
Cylinders, boom elevating, maintenance (M816):		
Assembly	16-14d	16-86
Cleaning and inspection	16-14c	16-84
Disassembly	16-14b	16-84
Installation	16-14e	16-88
Removal	16-14a	16-82

D

	Para	Page
Damper maintenance:		
Assembly	5-20c	5-54
Disassembly	5-20b	5-54
Installation	5-20d	5-55
Removal	5-20a	5-54
Damper, pulsation, maintenance:		
Assembly	5-16d	5-46
Disassembly	5-16b	5-45
Inspection	5-16c	545
Installation	5-16e	5-46
Removal	5-16a	545
Damper, vibration, installation:		
Installation	3-74	3-213
Damper, vibration, maintenance:		
Check runout and wobble,	3-5a	3-7
Inspection	3-5c	3-8
Installation	3-5d	3-8
Removal	3-5b	3-8
Damper, vibration, removal:		
Removal	3-30	3-109
Data, equipment description and	1-9	1-2
Deflectors, ceiling registers and, replacement:		
Installation	15-38b	15-154
Removal	15-38a	15-154
Designations, official nomenclature, names, and	1-5	1-1
Destruction of army materiel to prevent enemy use.	1-3	1-1
Diagnostic Equipment (TMDE), Test Measurement, and	2-3	2-1
Differential and differential earner repair:		
Assembly and adjustment.	10-8c	10-34
Cleaning, inspection, and repair	10-8b	10-29
Disassembly	10-8a	10-22
Differential earner, differential and, repair:		
Assembly and adjustment	10-8c	10-34
Cleaning, inspection, and repair	10-8b	10-29
Disassembly	10-8a	10-22
Differential, front and rear, maintenance:		
Cleaning and inspection	10-7b	10-19
Installation	10-7c	10-20
Removal	10-7a	10-18
Differential oil seals replacement:		
Front seal installation	10-9c	10-52
Front seal removal	10-9a	10-52
Rear seal installation	10-9d	10-53
Rear seal removal	10-9b	10-52
Door, bonnet, maintenance:		
Assembly	15-48d	15-186
Cleaning and inspection	1548c	15-186
Disassembly	15-48b	15-184
Installation	15-48e	15-186
Removal	15-48a	15-182
Doors, rear, maintenance:		
Assembly	15-28d	15-90
Cleaning and inspection	15-28c	15-90
Disassembly	15-28b	15-86
Installation	15-28e	15-94
Removal	15-28a	15-86
Doors, side, maintenance:		
Assembly	15-29d	15-98
Cleaning and inspection	15-29c	15-96
Disassembly	15-29b	15-96
Installation	15-29e	15-98
Removal	15-29a	15-95
Drag brake, front winch, replacement:		
Installation	16-6b	16-42
Removal	16-6a	16-41
Drive, accessory, installation:		
Installation	3-69	3-206
Drive, accessory, maintenance:		
Assembly	3-9d	3-22
Cleaning and inspection	3-9c	3-22
Disassembly	3-9b	3-20
Installation	3-9e	3-23
Removal	3-9a	3-20
Drive repair:		
Assembly	16-49c	16-298
Cleaning, inspection, and repair	16-49b	16-297
Disassembly	16-49a	16-296

INDEX (Contd)

	Para	Page
Driver's seat base maintenance:		
Inspection and repair	14-4b	14-4
Installation	14-4c	14-5
Removal	14-4a	14-2
Driveshaft, retractable beam, and lock maintenance:		
Cleaning and inspection	15-25b	15-76
Installation	15-25c	15-78
Removal	15-25a	15-76
Ducts, ceiling air, and supports replacement:		
Installation	15-45b	15-170
Removal	1545a	15-168
Dump body maintenance:		
Cleaning, inspection, and repair	15-13b	15-32
Installation	15-13c	15-32
Removal	15-13a	15-28
E		
Electrical box replacement		
Installation	15-90b	15-332
Removal	15-90a	15-332
Electric heater (10kW) wiring harness replacement:		
Installation	15-67b	15-254
Removal	15-67a	15-252
Elevating cylinders, boom, maintenance (M816):		
Assembly	16-14d	16-86
Cleaning and inspection	16-14c	16-84
Disassembly	16-14b	16-84
Installation	16-14e	16-88
Removal	16-14a	16-82
Emergency lamp, left side, wiring harness replacement:		
Installation	15-73b	15-272
Removal	15-73a	15-270
Emergency lamp, right side, wiring harness replacement		
Installation	15-74b	15-276
Removal	15-74a	15-274
Emergency light fixtures, blackout and, replacement		
Installation	15-91b	15-333
Removal	15-91a	15-333
End panel, hinged, maintenance:		
Assembly	15-33d	15-116
Cleaning and inspection	15-33c	15-114
Disassembly	15-33b	15-114
Installation	15-33e	15-116
Removal	15-33a	15-113
Engine and container replacement:		
Installation	3-25b	3-98
Removal	3-25a	3-97
Engine and transmission replacement		
Installation	3-24c	3-88
Preliminary disconnections	3-24a	3-77
Removal	3-24b	3-86
Engine coolant heater blower motor maintenance:		
Cleaning and inspection	17-4b	17-8
Installation	174c	17-9
Removal	174a	17-8
Engine coolant heater burner maintenance:		
Cleaning and inspection	17-10b	17-24
Installation	17-10c	17-24
Removal	17-10a	17-24
Engine coolant heater component bracket maintenance:		
Assembly	17-6d	17-14
Disassembly	17-6b	17-12
Inspection	17-6c	17-13
Installation	17-6e	17-14
Removal	17-6a	17-12
Engine coolant heater flame detector switch maintenance:		
Assembly	17-3d	17-6
Disassembly	17-3b	17-4
Inspection	17-3c	17-4
Installation	17-3e	17-6
Removal	17-3a	17-4
Engine coolant heater fuel control valve replacement		
Installation	17-7b	17-16
Removal	17-7a	17-16
Engine coolant heater fuel ' tube and preheat resistor replacement:		
Installation	17-9b	17-22
Removal	17-9a	17-22
Engine coolant heater housing and heat exchanger maintenance:		
Cleaning and inspection	17-11b	17-26
Installation	17-11c	17-26
Removal	17-11a	17-26

INDEX (Contd)

	Para	Page
Engine coolant heater overheat switch and igniter maintenance:		
Igniter installation	17-8d	17-20
Igniter removal	17-8b	17-18
Inspection	17-8c	17-19
Overheat switch installation	17-8e	17-20
Overheat switch removal	17-8a	17-18
Engine coolant heater restriction thermostat maintenance:		
Inspection	17-5b	17-10
Installation	17-5c	17-10
Removal	17-5a	17-10
Engine coolant heater testing		
Blower motor test	17-12e	17-32
Flame detector switch test	17-12c	17-32
Fuel control valve test	17-12d	17-32
Igniter test	17-12b	17-30
Overheat switch test	17-12g	17-34
Preparation	17-12a	17-28
Restriction thermostat test	17-12f	17-34
Test equipment removal	17-12h	17-34
Engine injector timing instructions:		
Injector timing	3-81b	3-234
Timing tool setup	3-81a	3-233
Engine lifting brackets installation:		
Installation	3-66	3-203
Entrance receptacle replacement:		
Installation	15-81b	15-294
Removal	15-81a	15-294
Engine removal from repair stand:		
Removal	3-75	3-214
Equipment characteristics, capabilities, and features	1-10	1-2
Equipment common tools and	2-1	2-1
Equipment description and data	1-9	1-2
Equipment improvement recommendations, reporting quality deficiencies, ideas, and	1-7	1-2
Equipment Improvement Report and Maintenance Digest (EIR MD)	1-8	1-2
Equipment requiring calibration	1-6	1-1
Exhaust, intake and, valves, refacing		
Cleaning after refacing	3-77c	3-218
Grinding or refacing valves	3-77	3-218
Valve specifications	3-77a	3-217
Exhaust manifold replacement		
Installation	3-11b	3-28
Removal	3-11a	3-28
Expendable/durable supplies and materials list, Appendix C		C-1
Extension, boom, and rollers, crane shipper, boom, maintenance (M819):		
Boom extension assembly	16-34o	16-208
Boom extension disassembly	16-34f	16-200
Boom extension installation	16-34s	16-210
Boom extension removal	16-34b	16-197
Worn installation	16-34r	16-210
Boom removal	16-34c	16-198
Cleaning and inspection	16-34j	16-202
Extension cylinder installation	16-34q	16-209
Extension cylinder removal	16-34d	16-198
Front lower roller assembly and adjustment	16-34n	16-206
Front lower roller disassembly	16-34g	16-200
Middle lower roller assembly	16-34m	16-206
Middle lower roller disassembly	16-34h	16-201
Repair	16-34k	16-202
Shipper installation	16-34t	16-212
Shipper removal	16-34a	16-194
Upper roller assembly and adjustment	16-34l	16-204
Upper roller disassembly	16-34i	16-201
Upper roller installation	16-34p	16-208
Upper roller removal	16-34e	16-199
Extension cylinder, boom, maintenance (M819):		
Assembly	16-35d	16-216
Cleaning and inspection	16-35b	16-214
Disassembly	16-35a	16-214
Repair	16-35c	16-216
Extension cylinder repair:		
Cleaning, inspection, and repair	16-20b	16-122
Removal	16-20a	16-120
Reassembly	16-20c	16-122

INDEX (Contd)

	Para	Page
Exterior side panel maintenance:		
Assembly	15-32c	15-110
Cleaning and inspection	15-32b	15-110
Disassembly	15-32a	15-106

F

	Para	Page
Fabricated tools	2-4	2-1
Fan hub repair:		
Assembly	3-7c	3-16
Cleaning and inspection	3-7b	3-14
Disassembly	3-7a	3-14
Features, equipment characteristics and capabilities	1-10	1-2
Fenders, rear, replacement; tractor wrecker body maintenance:		
Installation	15-9b	15-18
Removal	15-9a	15-18
Fifth wheel maintenance (M815):		
Assembly	13-4c	13-12
Cleaning and inspection	13-4b	13-12
Disassembly	13-4a	13-11
Fifth wheel maintenance (M818):		
Assembly	13-3c	13-8
Cleaning and inspection	13-3b	13-6
Disassembly	13-3a	13-2
Fifth wheel maintenance (M819):		
Assembly	13-5c	13-20
Cleaning and inspection	13-5b	13-18
Disassembly	13-5a	13-14
Filler, ceiling, and side panels replacement		
Left side panel and filler installation	15-44d	15-167
Left side panel and filler removal	15-44a	15-166
Right side panel and filler installation	15-44c	15-166
Right side panel and filler removal	15-44b	15-166
Flame detector switch, engine coolant heater, maintenance:		
Assembly	17-3d	17-6
Disassembly	17-3b	17-4
Inspection	17-3c	17-4
Installation	17-3e	17-6
Removal	17-3a	17-4
Flame detector switch, personnel heater, maintenance:		
Assembly	17-15d	17-38
Cleaning and inspection	17-15c	17-38
Disassembly	17-15b	17-38
Installation	17-15e	17-38
Removal	17-15a	17-37
Flange, crankshaft, installation:		
Installation	3-73	3-212
Flange, crankshaft, maintenance:		
Check runout and wobble	3-6c	3-12
Installation	3-6b	3-10
Removal	3-6a	3-10
Flange, crankshaft, removal:		
Removal	3-31	3-110
Flexible converter wiring harness replacement:		
Installation	15-77b	15-282
Removal	15-77a	15-282
Floor, hinged, maintenance:		
Assembly	15-31d	15-104
Cleaning and inspection	15-31c	15-104
Disassembly	15-31b	15-102
Installation	15-31e	15-104
Removal	15-31a	15-102
Flow test:		
Checkball seating test	5-11b	5-30
Fuel delivery adjustment and measurement	5-11c	5-31
Test stand setup	5-11a	5-28
Fluorescent light fixtures maintenance:		
Assembly	15-92c	15-335
Disassembly	15-92b	15-334
Installation	15-92d	15-335
Removal	15-92a	15-334
Flywheel and clutch installation:		
Clutch installation	3-59b	3-192
Flywheel installation	3-59a	3-191
Flywheel and clutch removal:		
Removal	3-42	3-124
Flywheel and gear replacement:		
Flywheel installation	3-21d	3-68
Flywheel removal	3-21a	3-66
Ring gear installation	3-21c	3-68
Ring gear removal	3-21b	3-66

INDEX (Contd)

	Para	Page
Flywheel housing installation:		
Alinement	3-58b	3-188
Installation	3-58a	3-188
Flywheel housing maintenance:		
Adjustment	3-22d	3-73
Cleaning and inspection	3-22b	3-70
Installation,	3-22c	3-72
Removal	3-22a	3-70
Flywheel housing removal:		
Removal	3-43	3-125
Follower, cam, installation:		
Installation	3-61	3-194
Follower, cam, removal:		
Removal	3-41	3-123
Forward-rear and rear-rear axle replacement:		
Installation	10-5b	10-17
Removal	10-5a	10-16
400 Hz converter and support bracket replacement:		
Installation	15-85b	15-320
Removal	15-85a	15-320
400 Hz converter harness conduit replacement:		
Installation	15-87b	15-326
Removal	15-87a	15-326
400 Hz receptacle wiring harness replacement:		
Installation	15-79b	15-288
Removal	15-79a	15-288
400 Hz supply wiring harness replacement:		
Installation	15-78b	15-286
Removal	15-78a	15-284
Frame alinement inspection:		
Frame leveling	13-6a	13-24
Frame squareness	13-6c	13-28
Horizontal bow inspection.	13-6b	13-24
Vertical bow inspection	13-6d	13-30
Frame, bonnet, repair:		
Assembly	15-46b	15-174
Disassembly	15-46a	15-172
Frame, ceiling and, maintenance:		
Cleaning and inspection	15-36b	15-134
Installation	15-36c	15-136
Removal	15-36a	15-131
Frame, lift liftgate, maintenance (M820A2):		
Assembly	15-52d	15-204
Cleaning and inspection	15-52c	15-204
Disassembly	15-52b	15-204
Installation	15-52e	15-205
Removal	15-52a	15-204
Frame, main, liftgate, maintenance (M820A2):		
Cleaning and inspection	15-53b	15-206
Installation	15-53c	15-206
Removal	15-53a	15-206
Frame rail sill, cargo body, replacement:		
Installation	15-3b	15-6
Removal	15-3a	15-6
Frame repair	13-2	13-1
Front and rear differential maintenance:		
Cleaning and inspection	10-7b	10-19
Installation	10-7c	10-20
Removal	10-7a	10-18
Front axle engagement air cylinder maintenance:		
Assembly	9-2d	9-4
Cleaning and inspection	9-2c	9-2
Disassembly	9-2b	9-2
Installation	9-2e	9-4
Removal	9-2a	9-2
Front axle replacement:		
Installation	10-2b	10-2
Removal	10-2a	10-2
Front cover, fuel pump, maintenance:		
Inspection	5-24b	5-66
Installation	5-24c	5-66
Removal	5-24a	5-66
Front gear cover installation:		
Installation	3-71	3-208
Front gear cover maintenance:		
Assembly	3-33d	3-114
Cleaning and inspection	3-33c	3-112
Disassembly	3-33b	3-112
Removal	3-33a	3-112
Front wall register replacement:		
Installation	15-39b	15-156
Removal	15-39a	15-156
Front winch cable tensioner maintenance:		
Assembly	16-4d	16-32
Cleaning and inspection	16-4c	16-30
Disassembly	16-4b	16-28
Installation	16-4e	16-32
Removal	16-4a	16-28
Front winch drag brake replacement:		
Installation	16-6b	16-42
Removal	16-6a	16-41

INDEX (Contd)

	Para	Page
Front winch level wind maintenance:		
Assembly	16-3d	16-24
Cleaning and inspection	16-3c	16-20
Disassembly	16-3b	16-18
Installation	16-3e	16-26
Removal	16-3a	16-18
Front winch repair		
Cleaning, inspection, and repair	16-2d	16-6
End frame assembly	16-2f	16-14
End frame disassembly	16-2b	16-4
Gearcase assembly	16-2e	16-10
Gearcase disassembly	16-2c	16-5
Winch assembly	16-2g	16-15
Winch disassembly	16-2a	16-2
Front winch roller maintenance:		
Assembly	16-5d	16-38
Cleaning and inspection	16-5c	16-36
Disassembly	16-5b	16-34
Installation	16-5e	16-40
Removal	16-5a	16-34
Front wiring harness replacement:		
Installation	7-3b	7-12
Removal	7-3a	7-3
Fuel control valve, engine coolant heater, replacement		
Installation	17-7b	17-16
Removal	17-7a	17-16
Fuel control valve, personnel heater, maintenance:		
Inspection	17-16b	17-40
Installation	17-16c	17-42
Removal	17-16a	17-40
Fuel crossover connectors installation:		
Installation	3-60	3-193
Fuel crossover connectors removal:		
Removal	3-38	3-120
Fuel crossover connector replacement		
Installation,	3-17b	3-48
Removal	3-17a	3-48
Fuel injector (non-top stop) maintenance		
Assembly	5-7c	5-10
Cleaning and inspection	5-7b	6-8
Disassembly	5-7a	6-6
Fuel injector replacement:		
Installation	5-6b	5-4
Removal	5-6a	5-4
Fuel injector (top stop) maintenance:		
Assembly	5-8c	5-16
Cleaning and inspection	5-8b	5-14
Disassembly	5-8a	5-13
Fuel line and blower housing, personnel heater, replacement:		
Installation	17-19b	17-50
Removal	17-19a	17-50
Fuel pump air cylinder maintenance:		
Adjustment	5-21c	5-56
Installation	5-21b	5-56
Removal	5-21a	5-56
Fuel pump calibration:		
Checking and adjusting governor weight pressure	5-25l	5-84
Checking and adjusting throttle lever travel	5-25h	5-80
Fuel pump run-in	5-25c	5-72
Mounting pump to test stand	5-25b	5-68
Shutdown and removal from test stand	5-25n	5-86
Testing and adjusting fuel pressure	5-25j	5-82
Testing and adjusting governor fuel pressure	5-25k	5-84
Testing and adjusting idle speed	5-25g	5-78
Testing and adjusting idle speed (VS governor only)	5-25m	5-86
Testing and adjusting pump main pressure	5-25i	5-82
Testing and adjusting throttle leakage	5-25f	5-76
Testing governor cutoff RPM	5-25e	5-74
Testing pump seals for leaks	5-25d	5-74
Throttle shaft cover removal	5-25a	5-68
Fuel pump front cover maintenance:		
Inspection	5-24b	5-66
Installation	5-24c	6-66
Removal	5-24a	5-66

INDEX (Contd)

	Para	Page
Fuel pump housing maintenance:		
Assembly	5-23d	5-64
Disassembly	5-23b	5-62
Inspection	5-23c	5-64
Installation	5-23e	5-65
Removal	5-23a	5-62
Fuel pump mounting to holding fixture:		
Installation	5-14b	5-42
Removal	5-14a	5-42
Fuel pump replacement		
Installation	5-13b	5-40
Removal	5-13a	5-38
Fuel pump shutoff valves replacement		
Installation	5-15b	5-44
Removal	5-15a	5-43
Fuel pump spring pack maintenance:		
Inspection	5-18b	5-48
Installation	5-18c	5-49
Removal	5-18a	5-48
Fuel pump wiring harness, heater replacement:		
Installation	15-68b	15-256
Removal	15-68a	15-256
Fuel tank repair	5-4	5-2
Fuel tube and preheat resistor, engine coolant heater, replacement		
Installation	17-9b	17-22
Removal	17-9a	17-22

G

	Para	Page
Gear Case, crane, maintenance (M816):		
Assembly	16-28d	16-172
Cleaning and inspection	16-28c	16-170
Disassembly	16-28b	16-168
Installation	16-28c	16-173
Removed	16-28a	16-168
Gear Case, hoist bevel, repair (M816):		
Assembly	16-25e	16-150
Cleaning and inspection	16-25c	16-148
Disassembly	16-25b	16-146
Installation	16-25f	16-154
Removal	16-25a	16-144
Repair	16-25d	16-149
Gear cover, tint, installation:		
Installation	3-71	3-208
Gear cover, front, maintenance:		
Assembly	3-33d	3-114
Cleaning and inspection	3-33c	3-112
Disassembly	3-33b	3-112
Removal,	3-33a	3-112
Gear, flywheel and, replacement		
Flywheel installation	3-21d	3-68
Flywheel removal	3-21a	3-66
Ring gear installation	3-21c	3-68
Ring gear removal	3-21b	3-66
Gear, power steering, replacement		
Installation	12-5b	12-4
Removal	12-5a	12-3
Gear pump, pressure, replacement		
Installation	5-17b	5-47
Removal	5-17a	5-47
Gearshift lever, transmission, maintenance:		
Assembly	8-3d	8-4
Disassembly	8-3b	8-4
Inspection	8-3c	8-4
Installation	8-3e	8-4
Removal	8-3a	8-4
General troubleshooting instructions	2-6	2-1
Glass, windshield, replacement:		
Installation	14-5b	14-6
Removal	14-5a	14-6
Gondola, crane cab, replacement (M819):		
Installation	16-29b	16-174
Removal	16-29a	16-174
Gondola, crane, maintenance (M816):		
Assembly	16-22d	16-134
Cleaning, inspection, and repair	16-22c	16-132
Disassembly	16-22b	16-132
Installation	16-22e	16-136
Removal	16-22a	16-130
Governor control valve, power divider, replacement:		
Installation (M816)	16-50d	16-300
Installation (M819)	16-50c	16-300
Removal (M816)	16-50a	16-299
Removal (M819)	16-50b	16-300

INDEX (Contd)

	Para	Page
H		
Head, cylinder, installation:		
Installation,	3-62	3-196
Head, cylinder, repair:		
Assembly	3-51d	3-162
Cleaning	3-51b	3-150
Disassembly	3-51a	3-150
Inspection	3-51c	3-152
Heads, cylinder, removal:		
Removal	3-40	3-122
Heads, cylinder, replacement:		
Installation	3-18b	3-50
Removal	3-18a	3-49
Heat exchanger, engine coolant heater housing, maintenance:		
Cleaning and inspection	17-11b	17-26
Installation	17-11c	17-26
Removal	17-11a	17-26
Heat exchanger, personnel heater, maintenance:		
Cleaning and inspection	17-24b	17-64
Installation	17-24c	17-65
Removal	17-24a	17-64
Heater blower motor, engine coolant, maintenance:		
Cleaning and inspection	17-4b	17-8
Installation	17-4c	17-9
Removal	17-4a	17-8
Heater blower motor, personnel, replacement:		
Installation	17-20b	17-52
Removal	17-20a	17-52
Heater burner, engine coolant, maintenance:		
Cleaning and inspection	17-10b	17-24
Installation	17-10c	17-24
Removal	17-10a	17-24
Heater burner, personnel, maintenance:		
Assembly	17-21d	17-58
Cleaning and inspection	17-21c	17-56
Disassembly	17-21b	17-56
Installation	17-21e	17-59
Removal	17-21a	17-54
Heater component bracket, engine coolant, maintenance:		
Assembly	17-6d	17-14
Disassembly	17-6b	17-12
Inspection	17-6c	17-13
Installation	17-6e	17-14
Removal	17-6a	17-12
Heater control bracket, personnel, replacement:		
Installation	17-17b	17-44
Removal	17-17a	17-44
Heater, engine coolant, testing:		
Blower motor test	17-12e	17-32
Flame detector switch test	17-12c	17-32
Fuel control valve test	17-12d	17-32
Igniter test	17-12b	17-30
Overheat switch test	17-12g	17-34
Preparation	17-12a	17-28
Restriction thermostat test	17-12f	17-34
Test equipment removal	17-12h	17-34
Heater flame detector switch, engine coolant, maintenance:		
Assembly	17-3d	17-6
Disassembly	17-3b	17-4
Inspection	17-3c	17-4
Installation	17-3e	17-6
Removal	17-3a	17-4
Heater flame detector switch, personnel, maintenance:		
Assembly	17-15d	17-38
Cleaning and inspection	17-15c	17-38
Disassembly	17-15b	17-38
Installation	17-15e	17-38
Removal	17-15a	17-37
Heater fuel control valve, engine coolant, replacement:		
Installation	17-7b	17-16
Removal	17-7a	17-16
Heater fuel control valve, personnel, maintenance:		
Inspection	17-16b	17-40
Installation	17-16c	17-42
Removal	17-16a	17-40
Heater fuel line and blower housing, personnel, replacement:		
Installation	17-19b	17-50
Removal	17-19a	17-50
Heater fuel pump wiring harness replacement:		
Installation	15-68b	15-256
Removal	15-68a	15-256
Heater fuel tube and preheat resistor, engine coolant, replacement:		
Installation	17-9b	17-22
Removal	17-9a	17-22

INDEX (Contd)

	Para	Page
Heater heat exchanger, personnel, maintenance:		
Cleaning and inspection	17-24b	17-64
Installation	17-24c	17-65
Removal	17-24a	17-64
Heater housing and heat exchanger, engine coolant, maintenance:		
Cleaning and inspection	17-11b	17-26
Installation	17-11c	17-26
Removal	17-11a	17-26
Heater igniter and ignition control unit, personnel, replacement:		
Igniter installation	17-18d	17-48
Igniter removal	17-18a	17-46
Ignition control unit installation	17-18c	17-48
Ignition control unit removal	17-18b	17-46
Heater overheat switch and igniter, engine coolant, maintenance:		
Igniter installation	17-8d	17-20
Igniter removal	17-8b	17-18
Inspection	17-8c	17-19
Overheat switch installation	17-8e	17-20
Overheat switch removal	17-8a	17-18
Heater overheat switch, personnel, replacement:		
Installation	17-22b	17-60
Removal	17-22a	17-60
Heater, personnel, testing:		
Blower motor test	17-25e	17-72
Flame detector switch test	17-25c	17-68
Fuel control valve test	17-25d	17-68
Ignition test	17-25b	17-68
Overheat switch test	17-25f	17-72
Preparation	17-25a	17-66
Test equipment removal	17-25g	17-72
Heater receptacle, personnel, replacement:		
Installation	17-23b	17-62
Removal	17-23a	17-62
Heater restriction thermostat, engine coolant, maintenance:		
Inspection	17-5b	17-10
Installation	17-5c	17-10
Removal	17-5a	17-10
Heater wiring harness replacement:		
Installation	15-66b	15-250
Removal,	15-66a	15-248
Hinged end panel maintenance:		
Assembly	15-33d	15-116
Cleaning and inspection	15-33c	15-114
Disassembly	15-33b	15-114
Installation	15-33e	15-116
Removal	15-33a	15-113
Hinged floor maintenance:		
Assembly	15-31d	15-104
Cleaning and inspection	15-31c	15-104
Disassembly	15-31b	15-102
Installation	15-31e	15-104
Removal	15-31a	15-102
Hinged roof maintenance:		
Assembly	15-37d	15-148
Cleaning and inspection	15-37c	15-146
Disassembly	15-37b	15-142
Installation	15-37e	15-152
Removal	15-37a	15-140
Hinge plate, liftgate platform and, maintenance (M820A2):		
Adjustment	15-51d	15-202
Cleaning and inspection	15-51b	15-202
Installation	15-51e	15-202
Removal	15-51a	15-200
Repair	15-51c	15-202
Hoist bevel gearcase repair (M816):		
Assembly	16-25e	16-150
Cleaning and inspection	16-25c	16-148
Disassembly	16-25b	16-146
Installation	16-25f	16-154
Removal	16-25a	16-144
Repair	16-25d	16-149
Hoist cylinder maintenance:		
Assembly	15-15d	15-44
Cleaning and inspection	15-15c	15-42
Disassembly	15-15d	15-40
Installation	15-15e	15-46
Removal	15-15a	15-38
Hoist hydraulic pump and support maintenance (M816):		
Cleaning, inspection, and repair	16-24b	16-142
Installation	16-24c	16-142
Removal	16-24a	16-140
Hoist hydraulic winch motor replacement (M816):		
Installation	16-23b	16-138
Removal	16-23a	16-138

INDEX (Contd)

	Para	Page
Hoist level wind maintenance (M816):		
Assembly	16-16d	16-93
Cleaning and inspection	16-16c	16-92
Disassembly	16-16b	16-92
Installation	16-16e	16-93
Removal	16-16a	16-92
Hoist pump maintenance:		
Assembly	15-17d	15-54
Cleaning and inspection	15-17c	15-54
Disassembly	15-17b	15-52
Installation	15-17e	15-54
Removal	15-17a	15-52
Hoist safety latch maintenance:		
Assembly	15-16d	15-50
Cleaning and inspection	15-16c	15-50
Disassembly	15-16b	15-48
Installation	15-16e	15-50
Removal	15-16a	15-48
Hoist winch, cable, replacement (M819):		
Installation	16-31b	16-180
Removal	16-31a	16-178
Hoist winch maintenance (M816):		
Assembly	16-17d	16-100
Cleaning and inspection	16-17c	16-98
Disassembly	16-17b	16-95
Installation	16-17e	16-103
Removal	16-17a	16-94
Hoist winch motor replacement (M816):		
Installation	16-15b	16-91
Removal	16-15a	16-90
Holding fixture, fuel pump mounting to:		
Installation	5-14b	5-42
Removal	5-14a	5-42
Hose, hydraulic, and tube replacement; tractor wrecker body maintenance:		
Installation	15-10b	15-22
Removal	15-10a	15-20
Hoses, hydraulic, replacement; dump body maintenance:		
Installation	15-20b	15-66
Removal	15-20a	15-64
Housing, blower, personnel heater fuel line and, replacement:		
Installation	17-19b	17-50
Removal	17-19a	17-50
Housing, cam follower, maintenance:		
Assembly	3-19e	3-56
Cleaning and inspection	3-19c	3-54
Disassembly	3-19b	3-53
Installation	3-19f	3-58
Removal	3-19a	3-51
Repair	3-19d	3-54
Housing, engine coolant heater, and heat exchanger, maintenance:		
Cleaning and inspection	17-11b	17-26
Installation	17-11c	17-26
Removal	17-11a	17-26
Housing, flywheel, installation:		
Alinement	3-58b	3-188
Installation	3-58a	3-188
Housing, flywheel, maintenance:		
Adjustment	3-22d	3-73
Cleaning and inspection	3-22b	3-70
Installation	3-22c	3-72
Removal	3-22a	3-70
Housing, flywheel, removal:		
Removal	3-43	3-125
Housing, fuel pump, maintenance:		
Assembly	5-23d	5-64
Disassembly	5-23b	5-62
Inspection	5-23c	5-64
Installation	5-23e	5-65
Removal	5-23a	5-62
Hub, fan, repair:		
Assembly	3-7c	3-16
Cleaning and inspection	3-7b	3-14
Disassembly	3-7a	3-14
Hydraulic hose and tube replacement; tractor wrecker body maintenance:		
Installation	15-10b	15-22
Removal	15-10a	15-20
Hydraulic hoses replacement; dump body maintenance:		
Installation	15-20b	15-66
Removal	15-20a	15-64
Hydraulic pump, hoist, and support maintenance (M816):		
Cleaning, inspection, and repair	16-24b	16-142
Installation	16-24c	16-142
Removal	16-24a	16-140

INDEX (Contd)

	Para	Page
Hydraulic pump, liftgate, replacement (M820A2):		
Installation	15-61b	15-234
Removal	15-61a	15-234
Hydraulic swivel valve replacement (M819):		
Installation	16-32b	16-184
Removal	16-32a	16-182
Hydraulic tubing, liftgate, replacement (M820A2):		
Installation	15-57b	15-220
Removal	15-57a	15-216
Hydraulic winch motor, hoist, replacement (M816):		
Installation	16-23b	16-138
Removal	16-23a	16-138
I		
Igniter and ignition control unit, personnel heater, replacement:		
Igniter installation	17-18d	17-48
Igniter removal	17-18a	17-46
Ignition control unit installation	17-18c	17-48
Ignition control unit removal	17-18b	17-46
Igniter, engine coolant heater overheat switch and, maintenance:		
Igniter installation	17-8d	17-20
Igniter removal	17-8b	17-18
Inspection	17-8c	17-19
Overheat switch installation	17-8e	17-20
Overheat switch removal	17-8a	17-18
Ignition control unit, personnel heater igniter and, replacement:		
Igniter installation	17-18d	17-48
Igniter removal	17-18a	17-46
Ignition control unit installation	17-18c	17-48
Ignition control unit removal	17-18b	17-46
Illustrated list of manufactured items, Appendix E		E-1
Injector and valve adjustment (dial indicator method):		
Checking plunger free travel	3-82a	3-237
Injector and valve adjustment	3-82b	3-239
Injector and valve adjustment (torque method):		
Injector and valve adjustment	3-83b	3-246
Pre-adjustment setup	3-83a	3-244
Injector, fuel, replacement:		
Installation,	5-6b	5-4
Removal	5-6a	5-4
Injector leakage test:		
Injector leakage tester setup	5-9a	5-19
Injector plunger and seat testing	5-9b	5-21
Injector (non-top stop), fuel, maintenance:		
Assembly	5-7c	5-10
Cleaning and inspection	5-7b	5-8
Disassembly	5-7a	5-6
Injector sleeve maintenance:		
Bead cutting	3-79b	3-223
Check and test	3-79e	3-226
Fitting and forming	3-79d	3-225
Installation	3-79c	3-224
Removal	3-79a	3-222
Injector timing, engine, instructions:		
Injector timing	3-81b	3-234
Timing tool setup,	3-81a	3-233
Injector (top stop), fuel, maintenance:		
Assembly,	5-8c	5-16
Cleaning and inspection	5-8b	5-14
Disassembly	5-8a	5-13
Inner boom maintenance (M816):		
Assembly	16-19d	16-116
Cleaning and inspection	16-19c	16-116
Disassembly	16-19b	16-114
Installation	16-19e	16-118
Removal	16-19a	16-112
Insert seat, valve, maintenance:		
Cleaning	3-78c	3-221
Gaging and counterboring	3-78b	3-220
Installation	3-78d	3-221
Removal	3-78a	3-219

INDEX (Contd)

	Para	Page
Inspection	2-9	2-35
Insulation, thermal barrier, replacement:		
Installation	17-26b	17-74
Removal	17-26a	17-74
Intake and exhaust valves refacing:		
Cleaning after resurfacing	3-77c	3-218
Grinding or refacing valves	3-77b	3-218
Valve specifications	3-77a	3-217
Intake manifold installation:		
Installation	3-67	3-204
Intake manifold maintenance:		
Assembly	3-10d	3-26
cleaning and inspection	3-10c	3-26
Disassembly	3-10b	3-26
Installation	3-10e	3-26
Removal	3-10a	3-24
Intake manifold removal:		
Assembly	3-35c	3-117
Disassembly	3-35b	3-117
Removal	3-35a	3-116
Interior panels, rear wall, replacement:		
Installation	15-34b	15-118
Removal	15-34a	15-118
Interior side panels and latches replacement:		
Installation	15-35b	15-126
Removal	15-35a	15-120

J

	Para	Page
Junction box, converter, replacement:		
Installation	15-86b	15-324
Removal	15-86a	15-322

K

	Para	Page
Knuckle, steering, maintenance:		
Adjustments	10-3d	10-10
Cleaning and inspection	10-3b	10-6
Installation	10-3c	10-8
Removal	10-3a	10-4

L

	Para	Page
Latch, hoist safety, maintenance:		
Assembly	15-16d	15-50
Cleaning and inspection	15-16c	15-50
Disassembly	15-16b	15-48
Installation	15-16e	15-50
Removal,	15-16a	15-48
Latches, interior side panels and, replacement:		
Installation	15-35b	15-126
Removal	15-35a	15-120
Left side emergency lamp wiring harness replacement:		
Installation	15-73b	15-272
Removal	15-73a	15-270
Level wind, front winch, maintenance:		
Assembly	16-3d	16-24
Cleaning and inspection	16-3c	16-20
Disassembly	16-3b	16-18
Installation	16-3e	16-26
Removal	16-3a	16-18
Level wind, rear winch, maintenance		
Assembly	16-9d	16-66
Cleaning and inspection	16-9c	16-62
Disassembly	16-9b	16-58
Installation	16-9e	16-68
Removal	16-9a	16-58
Level wind, hoist, maintenance (M816):		
Assembly	16-16d	16-93
Cleaning and inspection	16-16c	16-92
Disassembly	16-16b	16-92
Installation	16-16e	16-93
Removal	16-16a	16-92
Lift cylinder, boom, maintenance (M819):		
Assembly	16-33e	16-192
cleaning and inspection	16-33c	16-191
Disassembly	16-33b	16.190
Installation	16-33f	16-192
Removal	16-33a	16-188
Repair	16-33d	16-191

INDEX (Contd)

	Para	Page
Lift frame, liftgate, maintenance (M820A2):		
Assembly	15-52d	15-204
Cleaning and inspection	15-52c	15-204
Disassembly	15-52b	15-204
Installation	15-52e	15-205
Removal	15-52a	15-204
Liftgate auxiliary pump and bracket replacement (M820A2):		
Installation	15-56b	15-214
Removal	15-56a	15-214
Liftgate closing cylinders maintenance (M820A2):		
Assembly	15-60d	15-232
Cleaning and inspection	15-60c	15-232
Disassembly	15-60b	15-230
Installation	15-60e	15-232
Removal	15-60a	15-230
Liftgate clutches replacement (M820A2):		
Installation	15-54b	15-208
Removal	15-54a	15-208
Liftgate control linkage maintenance (M820A2):		
Assembly	15-55d	15-212
Cleaning and inspection	15-55c	15-212
Disassembly	15-55b	15-212
Installation	15-55e	15-212
Removal	15-55a	15-210
Liftgate control valve replacement (M820A2):		
Installation	15-58b	15-224
Removal	15-58a	15-224
Liftgate cylinder maintenance (M820A2):		
Assembly	15-59d	15-228
Cleaning and inspection	15-59c	15-227
Disassembly	15-59b	15-226
Installation	15-59e	15-228
Removal	15-59a	15-226
Liftgate hydraulic pump replacement (M820A2):		
Installation	15-61b	15-234
Removal	15-61a	15-234
Liftgate hydraulic tubing replacement (M820A2):		
Installation	15-57b	15-220
Removal	15-57a	15-216
Liftgate lift frame maintenance (M820A2):		
Assembly	15-52d	15-204
Cleaning and inspection	15-52c	15-204
Disassembly	15-52b	15-204
Installation	15-52e	15-205
Removal	15-52a	15-204
Liftgate main frame maintenance (M820A2):		
Cleaning and inspection	15-53b	15-206
Installation	15-53c	15-206
Removal	15-53a	15-206
Liftgate platform and hinge plate maintenance (M820A2):		
Adjustment	15-51d	15-202
Cleaning and inspection	15-51b	15-202
Installation	15-51e	15-202
Removal	15-51a	15-200
Repair	15-51c	15-202
Liftgate pump oil tank replacement (M820A2):		
Installation	15-62b	15-238
Removal	15-62a	15-236
Liftgate replacement (M820A2):		
Installation	15-50b	15-198
Removal	15-50a	15-196
Lifting brackets and rocker lever housing covers removal:		
Lifting bracket remova1.	3-36a	3-118
Rocker lever housing cover removal	3-36b	3-118
Lifting brackets, engine, installation:		
Installation	3-66	3-203
Lifting brackets replacement:		
Installation	3-13b	3-36
Removal	3-13a	3-36
Light fixtures, ceiling, replacement (M820A1):		
Installation	15-93b	15-336
Removal	16-93a	15-336
Light fixtures, emergency, blackout and, replacement:		
Installation	15-91b	15-333
Removal	15-91a	15-333
Light fixtures, fluorescent, maintenance:		
Assembly	15-92c	15-335
Disassembly	15-92b	15-334
Installation	15-92d	15-335
Removal	15-92a	15-334

INDEX (Contd)

	Para	Page
Load center conduit replacement:		
Installation	15-83b	15-314
Remora]	15-83a	15-312
Load center maintenance:		
Assembly	15-82c	15-304
Disassembly	15-82b	15-302
Installation	15-82d	15-305
Removal	15-82a	15-296
Lock and retractable beam driveshaft maintenance:		
cleaning and inspection	15-25b	15-76
Installation	15-25c	15-78
Removal	15-25a	15-76
Lower beam roller, upper and, maintenance (M816):		
Assembly	16-13d	16-78
Cleaning and inspection	16-13c	16.78
Disassembly	16-13b	16-77
Installation	16-13e	16-80
Removal	16-13a	16-77

M

	Para	Page
Main bearing, crankshaft and, installation:		
Installation	3-54	3-178
Main bearing, crankshaft and, removal:		
Removal	3-48	3-134
Main frame, liftgate, maintenance (M820A2):		
Cleaning and inspection	15-53b	15-206
Installation	15-53c	15-206
Removal	15-53a	15-206
Main wiring harness replacement; van body electrical components maintenance:		
Installation	15-64b	15-242
Removal	15-64a	15-240
Maintenance checklist, preliminary; mechanical and power steering system maintenance	12-3	12-2
Maintenance Digest (EIR MD), Equipment Improvement Report	1-8	1-2
Maintenance forms, records, and reports	1-2	1-1
Maintenance precautions; mechanical and power steering system maintenance	12-4	12-2
Mandatory replacement parts, Appendix D		D-1
Manifold, exhaust, replacement:		
Installation	3-11b	3-28
Removal	3-11a	3-28
Manifold, intake, installation:		
Installation	3-67	3-204
Manifold, intake, maintenance:		
Assembly	3-35c	3-117
Disassembly	3-35b	3-117
Removal	3-35a	3-116
Manifold, water, maintenance:		
Assembly	6-3c	6-4
Disassembly	6-3b	6-4
Installation	6-3d	6-5
Removal	6-3a	6-4
Manual starter switches, AC, replacement:		
Installation	15-89b	15-330
Removal	15-89a	15-330
Motor, hoist hydraulic winch, replacement (M816):		
Installation	16-23b	16-138
Removal	16-23a	16-138
Mounting engine on repair stand:		
Installation	3-29	3-108

N

	Para	Page
Names, designations, and official nomenclature	1-5	1-1

0

	Para	Page
Official nomenclature, names, and designations	1-5	1-1
Gil cooler maintenance:		
Assembly	3-12d	3-34
Cleaning and inspection	3-12c	3-32
Disassembly	3-12b	3-30
Installation	3-12e	3-34
Removal	3-12a	3-30
Oil pan installation:		
Installation	3-72	3-210

INDEX (Contd)

	Para	Page
Oil pan maintenance:		
Assembly	3-20d	3-62
Cleaning and inspection	3-20c	3-62
Disassembly	3-20b	3-62
Installation	3-20e	3-64
Removal	3-20a	3-60
Oil pan removal:		
Removal	3-46	3-130
Oil pump installation:		
Installation	3-68	3-205
Oil pump removal:		
Removal	3-34	3-115
Oil pump repair:		
Assembly	3-52c	3-172
Cleaning and inspection	3-52b	3-170
Disassembly	3-52a	3-168
Oil seal, rear cover and, installation:		
Installation	3-57	3-186
Oil seal, rear cover and, removal:		
Removal	3-45	3-129
Oil seals, differential, replacement:		
Front seal installation	10-9c	10-52
Front seal removal	10-9a	10-52
Rear seal installation	10-9d	10-53
Rear seal removal	10-9b	10-52
Oil tank, liftgate pump, replacement (M820A2):		
Installation	15-62b	15-238
Removal	15-62a	15-236
Outlet box replacement:		
Installation	15-88b	15-328
Removal	15-88a	15-328
Overheat switch and igniter, engine coolant heater, maintenance:		
Igniter installation	17-8d	17-20
Igniter removal	17-8b	17-18
Inspection	17-8c	17-19
Overheat switch installation	17-8e	17-20
Overheat switch removal	17-8a	17-18
Overheat switch, personnel heater, replacement:		
Installation	17-22b	17-60
Removal	17-22a	17-60

P

	Para	Page
Painting and refinishing	2-12	2-38
Pan, oil, installation:		
Installation	3-72	3-210
Pan, oil, maintenance:		
Assembly	3-20d	3-62
Cleaning and inspection	3-20c	3-62
Disassembly	3-20b	3-62
Installation,	3-20e	3-64
Removal	3-20a	3-60
Pan, oil, removal:		
Removal	3-46	3-130
Parking and service brakedrum repair:		
Cleaning	11-7a	11-28
Inspection and repair	11-7b	11-28
Parking and service brakeshoe repair:		
Parking and service brakeshoe inspection and repair	11-6c	11-26
Parking brakeshoe assembly	11-6e	11-27
Parking brakeshoe disassembly	11-6a	11-26
Service brakeshoe assembly	11-6d	11-27
Service brakeshoe disassembly	11-6b	11-26
Pattern test:		
Spray pattern test	5-10b	5-26
Spray pattern tester setup	5-10a	5-25
Pedal lever and bracket, service brake, maintenance:		
Cleaning and inspection	11-8b	11-32
Installation	11-8c	11-32
Removal,	11-8a	11-30
Personnel heater blower motor replacement:		
Installation	17-20b	17-52
Removal	17-20a	17-52
Personnel heater burner maintenance:		
Assembly	17-21d	17-58
Cleaning and inspection	17-21c	17-56
Disassembly	17-21b	17-56
Installation	17-21e	17-59
Removal	17-21a	17-54

INDEX (Contd)

	Para	Page
Personnel heater control bracket replacement:		
Installation	17-17b	17-44
Removal	17-17a	17-44
Personnel heater flame detector switch maintenance:		
Assembly	17-15d	17-38
Cleaning and inspection	17-15c	17-38
Disassembly	17-15b	17-38
Installation	17-15e	17-38
Removal	17-15a	17-37
Personnel heater fuel control valve maintenance:		
Inspection	17-16b	17-40
Installation	17-16c	17-42
Removal	17-16a	17-40
Personnel heater fuel line and blower housing replacement		
Installation	17-19b	17-50
Removal	17-19a	17-50
Personnel heater heat exchanger maintenance:		
Cleaning and inspection	17-24b	17-64
Installation	17-24c	17-65
Removal	17-24a	17-64
Personnel heater igniter and ignition control unit replacement:		
Igniter installation	17-18d	17-48
Igniter removal	17-18a	17-46
Ignition control unit installation	17-18c	17-48
Ignition control unit removal	17-18b	17-46
Personnel heater overheat switch replacement:		
Installation	17-22b	17-60
Remora]	17-22a	17-60
Personnel heater receptacle replacement:		
Installation	17-23b	17-62
Removal	17-23a	17-62
Personnel heater testing		
Blower motor test	17-25e	17-72
Flame detector switch test	17-25c	17-68
Fuel control valve test	17-25d	17-68
Ignition test,	17-25b	17-68
Overheat switch test	17-25f	17-72
Preparation	17-25a	17-66
Test equipment removal	17-25g	17-72
Piston and connecting rod installation:		
Assembly	3-55a	3-180
Connecting rod side clearance	3-55c	3-182
Installation	3-55b	3-180
Piston and connecting rod maintenance:		
Disassembly	3-47b	3-132
Removal	3-47a	3-132
Plate, hinge, liftgate platform and, maintenance (M820A2):		
Adjustment	15-51d	15-202
Cleaning and inspection	15-51b	15-202
Installation	15-51e	15-202
Removal	15-51a	15-200
Repair	15-51c	15-202
Plates, water header, replacement:		
Instillation	3-4b	3-6
Removal	3-4a	3-6
Platform, liftgate, and hinge plate maintenance (M820A2):		
Adjustment	15-51d	15-202
Cleaning and inspection	15-51b	15-202
Installation	15-51e	15-202
Removal	15-51a	15-200
Repair	15-51c	15-202
Plunger travel, top stop injector, adjustment:		
Adjustment	3-84	3-250
Power divider and drive replacement:		
Installation	16-47b	16-274
Removal	16-47a	16-270
Power divider governor control valve replacement:		
Installation (M816)	16-50d	16-300
Installation (M819)	16-50c	16-300
Removal (M816)	16-50a	16-299
Removal (M819)	16-50b	16-300
Power divider repair:		
Assembly	16-48c	16-288
Cleaning and inspection	16-48b	16-285
Disassembly	16-48a	16-278
Power steering assist cylinder maintenance:		
Assembly	12-7c	12-17
Cleaning and inspection	12-7b	12-16
Disassembly	12-7a	12-16

INDEX (Contd)

	Para	Page
Power steering gear replacement:		
Installation	12-5b	12-4
Removal	12-5a	12-3
Power steering test and adjustment:		
Poppet adjustment	12-6e	12-12
Sector shaft adjustment	12-6f	12-12
Steering gear internal leakage test	12-6d	12-10
Steering pump flow test	12-6c	12-8
Steering pump pressure test	12-6b	12-8
Steering pump test equipment installation	12-6a	12-6
Steering pump test equipment removal	12-6g	12-14
Power takeoff, transfer, repair (M816):		
Assembly	16-44c	16-258
Cleaning and inspection	16-44b	16-256
Disassembly	16-44a	16-254
Power takeoff, transfer, repair (M815, M819):		
Assembly	16-45c	16-266
Cleaning and inspection	16-45b	16-262
Disassembly	16-45a	16-260
Power takeoff, transfer, replacement:		
Installation	16-43b	16-252
Removal	16-43a	16-250
Power takeoff, transmission, repair		
Assembly	16-41c	16-244
Cleaning, inspection, and repair	16-41b	16-238
Disassembly	16-41a	16-232
Power takeoff, transmission, replacement:		
Installation	16-40b	16-231
Removal	16-40a	16-230
Precautions, maintenance; mechanical and power steering system maintenance	12-4	12-2
Preheat resistor, engine coolant heater fuel tube and, replacement:		
Installation	17-9b	17-22
Removal	17-9a	17-22
Preliminary maintenance checklist; mechanical and power steering system maintenance	12-3	12-2
Preparation for storage or shipment	1-4	1-1
preparing replacement engine for installation:		
Installation	3-26b	3-102
Removal	3-26a	3-101
Pressure gear pump replacement		
Installation	5-17b	5-47
Removal	5-17a	5-47
Pulley, accessory drive and, removal:		
Removal	3-32	3-111
Pulley, accessory drive, installation:		
Installation	3-70	3-207
Pulley, accessory drive, replacement		
Installation	3-8b	3-18
Removal	3-8a	3-18
Pulsation damper maintenance:		
Assembly	5-16d	5-46
Disassembly	5-16b	5-45
Inspection	5-16c	5-45
Installation	5-16e	5-46
Removal	5-16a	5-45
Pump, fuel, calibration:		
Checking and adjusting governor weight pressure	5-25l	5-84
Checking and adjusting throttle lever travel	5-25h	5-80
Fuel pump run-in	5-25c	5-72
Mounting pump to test stand	5-25b	5-68
Shutdown and removal from test stand	5-25n	5-86
Testing and adjusting fuel pressure	5-25j	5-82
Testing and adjusting governor fuel pressure	5-25k	5-84
Testing and adjusting idle speed	5-25g	5-78
Testing and adjusting idle speed (VS governor only)	5-25m	5-86
Testing and adjusting pump main pressure	5-25i	5-82
Testing and adjusting throttle leakage	5-25f	5-76
Testing governor cutoff RPM	5-25e	5-74
Testing pump seals for leaks	5-25d	5-74
Throttle shaft cover removal	5-25a	5-68

INDEX (Contd)

	Para	Page
Pump, fuel, replacement:		
Installation	5-13b	5-40
Removal	5-13a	5-38
Pump, hoist hydraulic, and support maintenance (M816):		
Cleaning, inspection, and repair	16-24b	16-142
Installation	16-24c	16-142
Removal	16-24a	16-140
Pump, hoist, maintenance:		
Assembly	15-17d	15-54
Cleaning and inspection	15-17c	15-54
Disassembly	15-17b	15-52
Installation	15-17e	15-54
Removal	15-17a	15-52
Pump, liftgate auxiliary, and bracket replacement (M820A2):		
Installation	15-56b	15-214
Removal	15-56a	15-214
Pump, liftgate hydraulic, replacement (M820A2):		
Installation	15-61b	15-234
Removal	15-61a	15-234
Pump, oil, installation:		
Installation	3-68	3-205
Pump, oil, removal:		
Removal	3-34	3-115
Pump, oil, repair:		
Assembly	3-52c	3-172
Cleaning and inspection	3-52b	3-170
Disassembly	3-52e	3-168
Pump, water, maintenance:		
Cleaning and inspection	6-4b	6-6
Installation	6-4c	6-6
Removal	6-4a	6-6
Push tubes, rocker lever housings and, installation:		
Installation	3-64	3-200
Push tubes, rocker lever housing and, maintenance:		
Assembly	3-15e	3-44
Cleaning and inspection	3-15c	3-41
Disassembly	3-15b	3-40
Installation	3-15f	3-45
Removal	3-15a	3-38
Repair	3-15d	3-43
Push tubes, rocker lever housings and, removal:		
Removal	3-37	3-119

R

	Para	Page
Radiator maintenance:		
Assembly	6-2c	6-2
Cleaning and inspection	6-2b	6-2
Disassembly	6-2a	6-2
Rear cover and oil seal installation:		
Installation	3-57	3-186
Rear cover and oil seal removal:		
Removal	3-45	3-129
Rear cover, ceiling, replacement (M820A1):		
Installation	15-40b	15-157
Removal	15-40a	15-157
Rear cover, ceiling, replacement (M820, M820A2):		
Installation	15-41b	15-158
Removal	15-41a	15-158
Rear doors maintenance:		
Assembly	15-28d	15-90
Cleaning and inspection	15-28c	15-90
Disassembly	15-28b	15-86
Installation	15-28e	15-94
Removal	15-28a	15-86
Rear fenders replacement; tractor wrecker body maintenance:		
Installation	15-9b	15-18
Removal	15-9a	15-18
Rear wall interior panels replacement:		
Left panel installation	15-34b	15-118
Left panel removal	15-34a	15-118
Rear winch automatic brake maintenance:		
Cleaning and inspection	16-11b	16-74
Installation	16-11c	16-75
Removal,	16-11a	16-74
Rear winch cable tensioner maintenance:		
Assembly	16-10c	16-72
Cleaning and inspection	16-10b	16-70
Disassembly	16-10a	16-70
Rear winch level wind maintenance:		
Assembly	16-9d	16-66
Cleaning and inspection	16-9c	16-62
Disassembly	16-9b	16-58
Installation	16-9e	16-68
Removal	16-9a	16-58

INDEX (Contd)

	Para	Page
Rear winch repair:		
Assembly	16-8c	16-52
Cleaning, inspection, and repair	16-8b	16-48
Disassembly	16-8a	16-44
Rear winch rollers repair:		
Repair	15-6	15-12
Rear wiring harness replacement:		
Installation	7-4b	7-30
Removal	7-4a	7-22
Receptacle, personnel heater, replacement:		
Installation	17-23b	17-62
Removal	17-23a	17-62
Records, reports, and maintenance forms	1-2	1-1
References, Appendix A		A-1
Refinishing, painting and	2-12	2-38
Register, front wall, replacement:		
Installation	15-39b	15-156
Removal	15-39a	15-156
Registers, ceiling, and deflectors replacement:		
Installation	15-38b	15-154
Removal	15-38a	15-154
Release bearing, shaft, and yoke maintenance:		
Assembly	4-3d	4-4
Cleaning and inspection	4-3c	4-4
Disassembly	4-3b	4-4
Installation	4-3e	4-5
Removal	4-3a	4-4
Relief valve maintenance (M819):		
Assembly	16-37d	16-226
Cleaning and inspection	16-37c	16-226
Disassembly	16-37b	16-224
Installation	16-37e	16-226
Removal	16-37a	16-224
Repair	2-10	2-36
Repair stand, mounting engine on:		
Installation	3-29	3-108
Repair stand, engine removal from:		
Removal	3-75	3-214
Repair parts	2-5	2-1
Replacement engine, preparing for, installation:		
Installation	3-26b	3-102
Removal	3-26a	3-101
Reporting quality deficiencies, ideas, and equipment improvement recommendations	1-7	1-2
Resistor, preheat, engine coolant heater fuel tube and, replacement		
Installation	17-9b	17-22
Removal	17-9a	17-22
Retractable beam driveshaft and lock maintenance:		
Cleaning and inspection	15-25b	15-76
Installation	15-25c	15-78
Removal	15-25a	15-76
Retractable beam replacement:		
Installation	15-25b	15-80
Removal	15-26a	15-80
Retractable beam rollers replacement:		
End roller installation	15-27d	15-84
End roller removal	15-27c	15-84
Support roller installation	15-27b	15-82
Support roller removal	15-27a	15-82
Right and left side blackout wiring harness replacement:		
Installation	15-72b	15-268
Removal	15-72a	15-266
Right side emergency lamp wiring harness replacement:		
Installation	15-74b	15-276
Removal	15-74a	15-274
Rocker lever housing covers installation:		
Installation	3-65	3-202
Rocker lever housing covers replacement:		
Installation	3-14b	3-37
Removal	3-14a	3-37
Rocker lever housing covers, lifting brackets and, removal:		
Lifting bracket removal	3-36a	3-118
Rocker lever housing cover removal	3-36b	3-118
Rocker lever housings and ‘ push tubes installation:		
Installation	3-64	3-200
Rocker lever housing and push tubes maintenance:		
Assembly	3-15e	3-44
Cleaning and inspection	3-15c	3-41
Disassembly	3-15b	3-40
Installation	3-15f	3-45
Removal	3-15a	3-38
Repair	3-15d	3-43

INDEX (Contd)

	Para	Page
Rocker lever housings and push tubes removal:		
Removal	3-37	3-119
Roller arm maintenance:		
Assembly	15-14d	15-36
Cleaning and inspection	15-14c	15-36
Disassembly	15-14b	15-36
Installation	15-14e	15-37
Removal	15-14a	15-35
Roller, front winch, maintenance:		
Assembly	16-5d	16-38
Cleaning and inspection	16-5c	16-36
Disassembly	16-5b	16-34
Installation	16-5e	16-40
Removal	16-5a	16-34
Rollers, crane shipper, boom, boom extension, maintenance (M819):		
Boom extension assembly	16-34o	16-208
Boom extension disassembly	16-34f	16-200
Boom extension installation	16-34s	16-210
Boom extension removal	16-34b	16-197
Boom installation	16-34r	16-210
Boom removal	16-34c	16-198
Cleaning and inspection	16-34j	16-202
Extension cylinder installation	16-34q	16-209
Extension cylinder removal	16-34d	16-198
Front lower roller assembly and adjustment	16-34n	16-206
Front lower roller disassembly	16-34g	16-200
Middle lower roller assembly	16-34m	16-206
Middle lower roller disassembly	16-34h	16-201
Repair	16-34k	16-202
Shipper installation	16-34t	16-212
Shipper removal	16-34a	16-194
Upper roller assembly and adjustment	16-34l	16-204
Upper roller disassembly	16-34i	16-201
Upper roller installation	16-34p	16-208
Upper roller removal	16-34e	16-199
Rollers, rear winch, repair:		
Repair	15-6	15-12
Rollers, retractable beam, replacement:		
End roller installation	15-27d	15-84
End roller removal	15-27c	15-84
Support roller installation	15-27b	15-82
Support roller removal	15-27a	15-82
Roller, upper and lower boom, maintenance (M816):		
Assembly	16-13d	16-78
Cleaning and inspection	16-13c	16-78
Disassembly	16-13b	16-77
Installation	16-13e	16-80
Removal	16-13a	16-77
Roof, hinged, maintenance:		
Assembly	15-37d	15-148
Cleaning and inspection	15-37c	15-146
Disassembly	15-37b	15-142
Installation	15-37e	15-152
Removal	15-37a	15-140
Rotochamber replacement (M816):		
Adjustment	4-4c	4-6
Installation	4-4b	4-6
Removal	4-4a	4-6

S

	Para	Page
Safety brace replacement:		
Installation	15-21b	15-69
Removal	15-21a	15-69
Safety latch, hoist, maintenance:		
Assembly	15-16d	15-50
Cleaning and inspection	15-16c	15-50
Disassembly	15-16b	15-48
Installation	15-16e	15-50
Removal	15-16a	15-48
Seat base, driver's, maintenance:		
Inspection and repair	14-4b	14-4
Installation	14-4c	14-5
Removal	14-4a	14-2
Seat grinding, valve:		
Cleaning...,	3-80d	3-230
Dressing grinding wheel	3-80a	3-228
Gaging valve seats	3-80s	3-230
Lapping valve seats	3-80f	3-232
Pre-grinding operation	3-80b	3-229
Valve seat grinding	3-80c	3-230
Service brakedrum, parking and, repair:		
Cleaning	11-7a	11-28
Inspection and repair	11-7b	11-28
Service brake pedal lever and bracket maintenance:		
Cleaning and inspection	11-8b	11-32
Installation	11-8c	11-32
Removal	11-8a	11-30

INDEX (Contd)

	Para	Page
Service brakeshoe, parking and, repair:		
Parking and service brakeshoe inspection and repair	11-6c	11-26
Parking brakeshoe assembly	11-6e	11-27
Parking brakeshoe disassembly	11-6a	11-26
Service brakeshoe assembly	11-6d	11-27
Service brakeshoe disassembly	11-6b	11-26
Shaft yoke, and release bearing maintenance:		
Assembly	4-3d	4-4
Cleaning and inspection	4-3c	4-4
Disassembly	4-3b	4-4
Installation	4-3e	4-5
Removal	4-3a	4-4
Shield, cab protector, maintenance:		
Cleaning and inspection	15-12b	15-26
Installation	15-12c	15-26
Removal	15-12a	15-24
Shifter housing, transmission, maintenance:		
Assembly	8-7c	8-40
Disassembly	8-7b	8-38
Installation	8-7d	8-42
Removal	8-7a	8-38
Shipper, crane, boom, boom extension, and rollers maintenance (M819):		
Boom extension assembly	16-34o	16-208
Boom extension disassembly	16-34f	16-200
Boom extension installation	16-34s	16-210
Boom extension removal	16-34b	16-197
Boom installation	16-34r	16-210
Boom removal	16-34c	16-198
Cleaning and inspection	16-34j	16-202
Extension cylinder installation	16-34q	16-209
Extension cylinder removal	16-34d	16-198
Front lower roller assembly and adjustment	16-34n	16-206
Front lower roller disassembly	16-34g	16-200
Middle lower roller assembly	16-34m	16-206
Middle lower roller disassembly	16-34h	16-201
Repair	16-34k	16-202
Shipper installation	16-34t	16-212
Shipper removal	16-34a	16-194
Upper roller assembly and adjustment	16-34l	16-204
Upper roller disassembly	16-34i	16-201
Upper roller installation	16-34p	16-208
Upper roller removal	16-34e	16-199
Shipment, preparation for storage or	1-4	1-1
Shutoff valves, fuel pump, replacement		
Installation	5-15b	5-44
Removal	5-15a	5-43
Side doors maintenance:		
Assembly	15-29d	15-98
Cleaning and inspection	15-29c	15-96
Disassembly	15-29b	15-96
Installation	15-29e	15-98
Removal	15-29a	15-95
Side panel, exterior, maintenance:		
Assembly	15-32c	15-110
Cleaning and inspection	15-32b	15-110
Disassembly	15-32a	15-106
Side panels, ceiling filler and, replacement		
Left side panel and filler installation	15-44d	15-167
Left side panel and filler removal	15-44a	15-166
Right side panel and filler installation	15-44c	15-166
Right side panel and filler removal	15-44b	15-166
Side panels, interior, and latches replacement		
Installation	15-35b	15-126
Removal	15-35a	15-120
Sill, cargo body frame rail replacement:		
Installation	15-3b	15-6
Removal	15-3a	15-6
Sleeve, injector, maintenance:		
Bead cutting	3-79b	3-223
Check and test	3-79e	3-226
Fitting and forming	3-79d	3-225
Installation	3-79c	3-224
Removal	3-79a	3-222
Special tools and support equipment	2-2	2-1
Spindle, wheel hub, maintenance:		
Inspection	10-4b	10-14
Installation	10-4c	10-15
Removal	10-4a	10-14
Spring pack, fuel pump, maintenance:		
Inspection	5-18b	5-48
Installation	5-18c	5-49
Removal	5-18a	5-48

INDEX (Contd)

	Para	Page
Spring pack, upper, maintenance:		
Assembly	5-19d	5-52
Disassembly	5-19b	5-50
Inspection	5-19c	5-52
Installation	5-19e	5-52
Removal	5-19a	5-50
Starter switches, AC manual, replacement:		
Installation	15-89b	15-330
Removal	15-89a	15-330
Starting repaired or replaced engine:		
In-chassis run-in	3-27c	3-106
Out-of-chassis run-in	3-27b	3-104
Priming lubrication system	3-27a	3-104
Steering assist cylinder, power, maintenance:		
Assembly	12-7c	12-17
Cleaning and inspection	12-7b	12-16
Disassembly	12-7a	12-16
Steering gear, power, replacement:		
Installation	12-5b	12-4
Removal	12-5a	12-3
Steering knuckle maintenance:		
Adjustments	10-3d	10-10
Cleaning and inspection	10-3b	10-6
Installation	10-3c	10-8
Removal	10-3a	10-4
Steering, power, test and adjustment:		
Poppet adjustment	12-6e	12-12
Sector shaft adjustment	12-6f	12-12
Steering gear internal leakage test	12-6d	12-10
Steering pump flow test	12-6c	12-8
Steering pump pressure test	12-6b	12-8
Steering pump test equipment installation	12-6a	12-6
Steering pump test equipment removal	12-6g	12-14
Subframe replacement:		
Installation	15-18b	15-58
Removal	15-18a	15-56
Support equipment, special tools and	2-2	2-1
Swing mechanism, boom, replacement (M819):		
Installation	16-30b	16-177
Removal	16-30a	16-176
Switch, engine coolant heater flame detector, maintenance:		
Assembly	17-3d	17-6
Disassembly	17-3b	17-4
Inspection	17-3c	17-4
Installation	17-3e	17-6
Removal	17-3a	17-4
Switch, personnel heater flame detector, maintenance:		
Assembly	17-15d	17-38
Cleaning and inspection	17-15c	17-38
Disassembly	17-15b	17-38
Installation	17-15e	17-38
Removal	17-15a	17-37
Switch, personnel heater overheat, replacement:		
Installation	17-22b	17-60
Removal	17-22a	17-60
Switches, AC manual starter, replacement:		
Installation	15-89b	15-330
Removal	15-89a	15-330
Swivel valve, hydraulic, replacement (M819):		
Installation	16-32b	16-184
Removal	16-32a	16-182

T

	Para	Page
Tank, fuel, repair	5-4	5-2
Tank, liftgate pump oil, replacement (M820A2):		
Installation	15-62b	15-238
Removal	15-62a	15-236
Telephone post wiring harness replacement:		
Installation	15-75b	15-278
Removal	15-75a	15-278
Tensioner, front winch cable, maintenance:		
Assembly	16-4d	16-32
Cleaning and inspection	164c	16-30
Disassembly	16-4b	16-28
Installation	16-4e	16-32
Removal	164a	16-28
Tensioner, rear winch cable, maintenance:		
Assembly	16-10c	16-72
Cleaning and inspection	16-10b	16-70
Disassembly	16-10a	16-70

INDEX (Contd)

	Para	Page
Test, Measurement, and Diagnostic Equipment (TMDE)	2-3	2-1
Thermal barrier insulation replacement:		
Installation	17-26b	17-74
Removal	17-26a	17-74
Thermostat, engine coolant heater restriction, maintenance:		
Inspection	17-5b	17-10
Installation	17-5c	17-10
Removal	17-5a	17-10
3-phase receptacle wiring harness replacement:		
Installation	15-76b	15-280
Removal	15-76a	15-280
Tire maintenance	12-8	12-18
Tools, fabricated	2-4	2-1
Top stop injector plunger travel adjustment:		
Adjustment	3-84	3-250
Torque limits, Appendix F		F-1
Tractor wrecker body replacement		
Installation	15-8b	15-16
Removal	15-8a	15-14
Transfer power takeoff repair (M816):		
Assembly	16-44c	16-258
Cleaning and inspection	16-44b	16-256
Disassembly	1644a	16-254
Transfer power takeoff repair (M815, M819):		
Assembly	1645c	16-266
Cleaning and inspection	1645b	16-262
Disassembly	16-45a	16-260
Transfer power takeoff replacement:		
Installation	16-43b	16-252
Removal	16-43a	16-250
Transfer repair		
Assembly	9-4d	9-35
Cleaning and inspection	9-4b	9-25
Disassembly	9-4a	9-12
Repair	9-4c	9-33
Transfer replacement		
Installation	9-3b	9-8
Removal	9-3a	9-6
Transition, ceiling, maintenance (M820, M820A2):		
Assembly	15-42c	15-162
Disassembly	15-42b	15-160
Installation	15-42d	15-162
Removal	15-42a	15-160
Transition, ceiling, maintenance (M820A1):		
Assembly	15-43c	15-164
Disassembly	15-43b	15-164
Installation	15-43d	15-164
Removal	15-43a	15-164
Transmission, engine and, replacement:		
Installation	3-24c	3-88
Preliminary disconnections	3-24a	3-77
Removal	3-24b	3-86
Transmission gearshift lever maintenance:		
Assembly	8-3d	8-4
Disassembly	8-3b	8-4
Inspection	8-3c	8-4
Installation	8-3e	8-4
Removal	8-3a	8-4
Transmission (in-vehicle) replacement:		
Installation	8-4b	8-8
Removal	8-4a	8-6
Transmission maintenance:		
Assembly	8-6c	8-28
Cleaning and inspection	8-6b	8-22
Disassembly	8-6a	8-14
Transmission (out-of-vehicle) replacement:		
Installation	8-5b	8-12
Removal	8-5a	8-10
Transmission power takeoff repair:		
Assembly	16-41c	16-244
Cleaning, inspection, and repair	16-41b	16-238
Disassembly	16-41a	16-232
Transmission power takeoff replacement:		
Installation	16-40b	16-231
Removal	16-40a	16-230
Transmission shifter housing maintenance:		
Assembly	8-7c	8-40
Disassembly	8-7b	8-38
Installation	8-7d	8-42
Removal	8-7a	8-38

INDEX (Contd)

	Para	Page
Troubleshooting,general, instructions	2-6	2-1
Tube, fuel, and preheat resistor, engine coolant heater, replacement		
Installation	17-9b	17-22
Removal	17-9a	17-22
Tube, hydraulic hose and, replacement tractor wrecker body maintenance:		
Instigation	15-10b	15-22
Removal	15-10a	15-20
Tubing, liftgate hydraulic, replacement (M820A2):		
Installation	15-57b	15-220
Removal	15-57a	15-216
Turntable, crane, maintenance (M816)		
Assembly	16-26d	16-160
Cleaning, inspection, and repair	16-26c	16-160
Disassembly	16-26b	16-158
Installation	16-26e	16-162
Removal	16-26a	16-156
Twin poppet valve replacement:		
Installation	8-2b	8-2
Removal	8-2a	8-2

U

	Para	Page
Underframe repair		
Assembly	15-30b	15-100
Disassembly	15-30a	15-100
Unloader valve replacement		
Installation	11-4b	11-8
Removal	11-4a	11-8
Upper and lower boom roller maintenance (M816):		
Assembly	16-13d	16-78
Cleaning and inspection	16-13c	16-78
Disassembly	16-13b	16-77
Installation	16-13e	16-80
Removal	16-13a	16-77
Upper spring pack maintenance:		
Assembly	5-19d	5-52
Disassembly	5-19b	5-50
Inspection	5-19c	5-52
Installation	5-19e	5-52
Removal	5-19a	5-50

V

	Para	Page
Valve adjustment, injector and, (dial indicator method):		
Checking plunger free travel	3-82a	3-237
Injector and valve adjustment	3-82b	3-239
Valve adjustment, injector and, (torque method)		
Injector and valve adjustmen t	3-83b	3-246
Pre-adjustment setup	3-83a	3-244
Valve bank, control, replacement (M819):		
Installation	16-36b	16-221
Removal	16-36a	16-218
Valves, check, replacement (M819):		
Elevating cylinder check valve installation	16-38c	16-228
Elevating cylinder check valve removal	16-38a	16-228
Hoist winch motor check valve installation	16-38d	16-229
Hoist winch motor check valve removal	16-38b	16-228
Valve, control, maintenance:		
Assembly	15-19d	15-62
Cleaning and inspection	15-19c	15-62
Disassembly	15-19b	15-60
Installation	15-19e	15-62
Removal	15-19a	15-60
Valve, control repair (M816):		
Assembly	16-27c	16-166
Cleaning, inspection, and repair	16-27b	16-164
Disassembly	16-27a	16-164
Valve crosshead maintenance:		
Inspection	3-16b	3-46
Installation and adjustment	3-16c	3-46
Removal	3-16a	3-46
Valve, engine coolant heater fuel control, replacement:		
Installation	17-7b	17-16
Removal	17-7a	17-16
Valve, hydraulic swivel, replacement (M819):		
Installation	16-32b	16-184
Removal	16-32a	16-182

INDEX (Contd)

	Para	Page
Valve, liftgate control, replacement (M820A2):		
Installation	15-58b	15-224
Removal	15-58a	15-224
Valve, personnel heater fuel control, maintenance:		
Inspection	17-16b	17-40
Installation	17-16c	17-42
Removal	17-16a	17-40
Valve, relief, maintenance (M819):		
Assembly	16-37d	16-226
Cleaning and inspection	16-37c	16-226
Disassembly	16-37b	16-224
Installation	16-37e	16-226
Removal	16-37a	16-224
Valve seat grinding		
Cleaning	3-8od	3-230
Dressing grinding wheel	3-80a	3-228
Gaging valve seats	3-80e	3-230
Lapping valve seats	3-80f	3-232
Pre-grinding operation	3-80b	3-229
Valve seatgrinding	3-80c	3-230
Valve seat insert maintenance:		
Cleaning	3-78c	3-221
Gaging and counterboring	3-78b	3-220
Installation	3-78d	3-221
Removal	3-78a	3-219
Valve, twin poppet, replacement:		
Installation	8-2b	8-2
Removal	8-2a	8-2
Valve, unloader, replacement		
Installation	11-4b	11-8
Removal	11-4a	11-8
Van body maintenance:		
Inspection	15-24b	15-74
Installation	15-24c	15-74
Removal	15-24a	15-72
Vibration damper installation:		
Installation	3-74	3-213
Vibration damper maintenance:		
Check runout and wobble	3-5a	3-7
Inspection	3-5c	3-8
Installation	3-5d	3-8
Removal	3-5b	3-8
Vibration damper removal:		
Removal	3-30	3-109

W

	Para	Page
Wall, rear, interior panels replacement		
Left panel installation	15-34b	15-118
Left panel removal	15-34a	15-118
Water header plates replacement:		
Installation	3-4b	3-6
Removal	3-4a	3-6
Water manifold maintenance:		
Assembly	6-3c	64
Disassembly	6-3b	64
Installation	6-3d	6-5
Removal	6-3a	6-4
Water pump maintenance:		
Cleaning and inspection	6-4b	6-6
Installation	64c	6-6
Removal	6-4a	6-6
Wheel hub spindle maintenance:		
Inspection	10-4b	10-14
Installation	10-4c	10-15
Removal	10-4a	10-14
Winch automatic brake, rear, maintenance:		
Cleaning and inspection	16-11b	16-74
Installation	16-11c	16-75
Removal	16-11a	16-74
Winch, cable hoist, replacement (M819):		
Installation	16-31b	16-180
Removal	16-31a	16-178
Winch cable tensioner, front maintenance:		
Assembly	16-4d	16-32
Cleaning and inspection	16-4c	16-30
Disassembly	16-4b	16-28
Installation	16-4e	16-32
Removal	16-4a	16-28
Winch cable tensioner, rear, maintenance:		
Assembly	16-10c	16-72
Cleaning and inspection	16-10b	16-70
Disassembly	16-10a	16-70
Winch drag brake, front replacement		
Installation	16-6b	16-42
Removal	16-6a	16-41

INDEX (Contd)

	Para	Page
Winch, front, repair		
Cleaning, inspection, and repair	16-2d	16-6
End frame assembly	16-2f	16-14
End frame disassembly	16-2b	164
Gearcase assembly	16-2e	16-10
Gearcase disassembly	16-2c	16-5
Winch assembly	16-2g	16-15
Winch disassembly	16-2a	16-2
Winch, hoist, maintenance (M816):		
Assembly	16-17d	16-100
Cleaning and inspection	16-17c	16-98
Disassembly	16-17b	16-95
Installation	16-17e	16-103
Removal	16-17a	16-94
Winch level wind, front, maintenance:		
Assembly	16-3d	16-24
Cleaning and inspection	16-3c	16-20
Disassembly	16-3b	16-18
Installation	16-3e	16-26
Removal	16-3a	16-18
Winch level wind, rear, maintenance:		
Assembly	16-9d	16-66
Cleaning and inspection	16-9c	16-62
Disassembly	16-9b	16-58
Installation	16-9e	16-68
Removal	16-9a	16-58
Winch motor, hoist, maintenance (M816):		
Installation	16-15b	16-91
Removal	16-15a	16-90
Winch motor, hoist, hydraulic, replacement (M816):		
Installation	16-23b	16-138
Removal	16-23a	16-138
Winch, rear, repair:		
Assembly	16-6c	16-52
Cleaning, inspection, and repair	16-8b	16-48
Disassembly	16-8a	16-44
Winch roller, front, maintenance:		
Assembly	16-5d	16-38
Cleaning and inspection	16-5c	16-36
Disassembly,	16-5b	16-34
Installation	16-5e	16-40
Removal	16-5a	16-34
Winch rollers, rear, repair		
Repair	15-6	15-12
Windshield glass replacement		
Installation	14-5b	14-6
Removal	14-5a	14-6
Wiring harness, air conditioner, replacement		
Installation	15-65b	15-246
Removal	15-65a	15-244
Wiring harness, blackout bypass, replacement		
Installation	15-70b	15-262
Removal	15-70a	15-260
Wiring harness, blackout and clearance light, replacement		
Installation	15-71b	15-264
Removal	15-71a	15-264
Wiring harness, electric heater (10kW), replacement:		
Installation	15-67b	15-254
Removal	15-67a	15-252
Wiring harness, flexible converter, replacement:		
Installation	15-77b	15-282
Removal	15-77a	15-282
Wiring harness, front replacement:		
Installation	7-3b	7-12
Removal	7-3a	7-3
Wiring harness, 400 Hz receptacle, replacement		
Installation	15-79b	15-288
Removal	15-79a	15-288
Wiring harness, 400 Hz supply, replacement		
Installation	15-78b	15-286
Removal	15-78a	15-284
Wiring harness, heater fuel pump, replacement		
Installation	15-68b	15-256
Removal	15-68a	15-256
Wiring harness, heater, replacement		
Installation	15-66b	15-250
Removal	15-66a	15-241
Wiring harness, left side emergency lamp, replacement		
Installation	15-73b	15-272
Removal	15-73a	15-270

INDEX (Contd)

	Para	Page
Wiring harness, main, replacement van body electrical components maintenance:		
Installation	15-64b	15-242
Removal	15-64a	15-240
Wiring harness, rear, replacement		
Installation	7-4b	7-30
Removal	7-4a	7-22
Wiring harness, right and left side blackout, replacement		
Installation	15-72b	15-268
Removal	15-72a	15-266
Wiring harness, right side emergency lamp, replacement		
Installation	15-74b	15-276
Removal	15-74a	15-274
Wiring harness, telephone post replacement		
Installation	15-75b	15-278
Removal	15-75a	15-278
Wiring harness, 3-phase receptacle, replacement		
Installation	15-76b	15-280
Removal	15-76a	15-280
Wiring hamesses, converter and auxiliary pump, replacement		
Installation	15-80b	15-292
Removal	15-80a	15-290
Wrecker body replacement		
Installation	15-5b	15-10
Removal	15-5a	15-8
Wrecker, tractor, body replacement:		
Installation	15-8b	15-16
Removal	15-8a	15-14

Y

	Para	Page
Yoke, release bearing, shaft and, maintenance:		
Assembly	4-3d	4-4
Cleaning and inspection	4-3c	4-4
Disassembly	4-3b	4-4
Installation	4-3e	4-5
Removal	4-3a	4-4

By Order of the Secretary of the Army:

GORDON R. SULLIVAN
General, United States Army
Chief of Staff

Official:

MILTON H. HAMILTON
Administrative Assistant to the
Secretary of the ***Army***
06843

By Order of the Secretary of the Air Force:

MERRILL A. McPEAK
General, United States Air Force
Chief of Staff

RONALD W. YATES
General, United States Air Force
Commander, Air Force Materiel Communal

By Order of the Marine Corps:

D.R. BLOOMER
Colonel, USMC
Director Program Support
Marine Corps Systems Command

Distribution:
To be distribution in accordance with DA Form 12-38-E (Block 0244) requirements for TM9-2320-260-34-2.

● U.S. GOVERNMENT PRINTING OFFICE: 1994-546-017/00153

TEAR ALONG PERFORATED LINE

RECOMMENDED CHANGES TO EQUIPMENT TECHNICAL PUBLICATIONS

SOMETHING WRONG WITH THIS PUBLICATION?

THEN...JOT DOWN THE DOPE ABOUT IT ON THIS FORM, CAREFULLY TEAR IT OUT, FOLD IT AND DROP IT IN THE MAIL.

FROM: (PRINT YOUR UNIT'S COMPLETE ADDRESS)
BBtry, 4th Bn 38th FA (8in) (SP)
Ft. Sill, OK 73503

DATE SENT 17 Aug 94

PUBLICATION NUMBER	PUBLICATION DATE	PUBLICATION TITLE
TM 9-2320-260-34-2	*1 June 1994*	Direct Support and General Support Maintenance

BE EXACT PIN-POINT WHERE IT IS

PAGE NO	PARA-GRAPH	FIGURE NO	TABLE NO
16-51	16-8	16-7	

IN THIS SPACE TELL WHAT IS WRONG AND WHAT SHOULD BE DONE ABOUT IT:

Include lb-ft specs when measuring spring length.

SAMPLE

PRINTED NAME, GRADE OR TITLE, AND TELEPHONE NUMBER
Timothy M. Cafferty, 1LT
AUTOVON 424-8023; Comm 287-8023

SIGN HERE
Timothy M. Cafferty

DA FORM 1 JUL 79 2028-2

PREVIOUS EDITIONS ARE OBSOLETE.

P.S.—IF YOUR OUTFIT WANTS TO KNOW ABOUT YOUR RECOMMENDATION MAKE A CARBON COPY OF THIS AND GIVE IT TO YOUR HEADQUARTERS.

REVERSE OF DA FORM 2028-2

SAMPLE

FILL IN YOUR UNIT'S ADDRESS

FOLD BACK

TEAR ALONG PERFORATED LINE

DEPARTMENT OF THE ARMY

B Btry, 4th Bn 38th FA (8in) (SP)

Ft. Sill, OK 73503

OFFICIAL BUSINESS

COMMANDER
U.S. ARMY TANK-AUTOMOTIVE COMMAND
ATTN: AMSTA-MB
WARREN, MI 48397-5000

TEAR ALONG PERFORATED LINE

RECOMMENDED CHANGES TO EQUIPMENT TECHNICAL PUBLICATIONS

SOMETHING WRONG WITH THIS PUBLICATION?

THEN...JOT DOWN THE DOPE ABOUT IT ON THIS FORM, CAREFULLY TEAR IT OUT, FOLD IT AND DROP IT IN THE MAIL.

FROM: (PRINT YOUR UNIT'S COMPLETE ADDRESS)

DATE SENT

PUBLICATION NUMBER	PUBLICATION DATE	PUBLICATION TITLE
TM 9-2320-260-34-2	1 June 1994	Direct Support and General Support Maintenance

BE EXACT PIN-POINT WHERE IT IS

PAGE NO	PARA-GRAPH	FIGURE NO	TABLE NO

IN THIS SPACE TELL WHAT IS WRONG AND WHAT SHOULD BE DONE ABOUT IT:

PRINTED NAME, GRADE OR TITLE, AND TELEPHONE NUMBER

SIGN HERE

DA FORM 1 JUL 79 2028-2

PREVIOUS EDITIONS ARE OBSOLETE.

P.S.—IF YOUR OUTFIT WANTS TO KNOW ABOUT YOUR RECOMMENDATION MAKE A CARBON COPY OF THIS AND GIVE IT TO YOUR HEADQUARTERS.

REVERSE OF DA FORM 2028-2

FILL IN YOUR
UNIT'S ADDRESS

FOLD BACK

DEPARTMENT OF THE ARMY

OFFICIAL BUSINESS

Commander
US Army Tank-Automotive Command
ATTN: AMSTA-MB
Warren, MI 48397-5000

TEAR ALONG PERFORATED LINE

THE METRIC SYSTEM AND EQUIVALENTS

LINEAR MEASURE

1 Centimeter = 10 Millimeters = 0.01 Meters = 0.3937 Inches
1 Meter = 100 Centimeters = 1000 Millimeters = 39.37 Inches
1 Kilometer = 1000 Meters = 0.621 Miles

WEIGHTS

1 Gram = 0.001 Kilograms = 1000 Milligrams = 0.035 Ounces
1 Kilogram = 1000 Grams = 2.2 lb.
1 Metric Ton = 1000 Kilograms = 1 Megagram = 1.1 Short Tons

LIQUID MEASURE

1 Milliliter = 0.001 Liters = 0.0338 Fluid Ounces
1 Liter = 1000 Milliliters = 33.82 Fluid Ounces

SQUARE MEASURE

1 Sq. Centimeter = 100 Sq. Millimeters = 0.155 Sq. Inches
1 Sq. Meter = 10,000 Sq. Centimeters = 10.76 Sq. Feet
1 Sq. Kilometer = 1,000,000 Sq. Meters = 0.386 Sq. Miles

CUBIC MEASURE

1 Cu. Centimeter = 1000 Cu. Millimeters = 0.06 Cu. Inches
1 Cu. Meter = 1,000,000 Cu. Centimeters = 35.31 Cu. Feet

TEMPERATURE

5/9(°F - 32) = °C
212° Fahrenheit is evuivalent to 100° Celsius
90° Fahrenheit is equivalent to 32.2° Celsius
32° Fahrenheit is equivalent to 0° Celsius
9/5C° + 32 =°F

APPROXIMATE CONVERSION FACTORS

TO CHANGE	TO	MULTIPLY BY
Inches	Centimeters	2.540
Feet	Meters	0.305
Yards	Meters	0.914
Miles	Kilometers	1.609
Square Inches	Square Centimeters	6.451
Square Feet	Square Meters	0.093
Square Yards	Square Meters	0.836
Square Miles	Square Kilometers	2.590
Acres	Square Hectometers	0.405
Cubic Feet	Cubic Meters	0.028
Cubic Yards	Cubic Meters	0.765
Fluid Ounces	Milliliters	29.573
Pints	Liters	0.473
Quarts	Liters	0.946
Gallons	Liters	3.785
Ounces	Grams	28.349
Pounds	Kilograms	0.454
Short Tons	Metric Tons	0.907
Pound-Feet	Newton-Meters	1.356
Pounds per Square Inch	Kilopascals	6.895
Miles per Gallon	Kilometers per Liter	0.425
Miles per Hour	Kilometers per Hour	1.609

TO CHANGE	TO	MULTIPLY BY
Centimeters	Inches	0.394
Meters	Feet	3.280
Meters	Yards	1.094
Kilometers	Miles	0.621
Square Centimeters	Square Inches	0.155
Square Meters	Square Feet	10.764
Square Meters	Square Yards	1.196
Square Kilometers	Square Miles	0.386
Square Hectometers	Acres	2.471
Cubic Meters	Cubic Feet	35.315
Cubic Meters	Cubic Yards	1.308
Milliliters	Fluid Ounces	0.034
Liters	Pints	2.113
Liters	Quarts	1.057
Liters	Gallons	0.264
Grams	Ounces	0.035
Kilograms	Pounds	2.205
Metric Tons	Short Tons	1.102
Newton-Meters	Pounds-Feet	0.738
Kilopascals	Pounds per Square Inch	0.145
Kilometers per Liter	Miles per Gallon	2.354
Kilometers per Hour	Miles per Hour	0.621

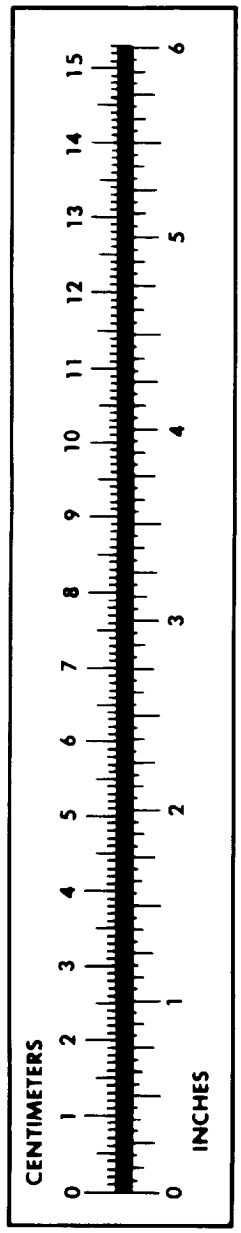

PIN: 027280-000